DOCUMENT
CONTROL
No. 923

CLINCH RIVER
BREEDER REACTOR PLANT
ENVIRONMENTAL REPORT

Volume III

PROJECT MANAGEMENT CORPORATION

8.1 ECONOMIC AND SOCIAL EFFECTS OF PLANT CONSTRUCTION AND OPERATION

There are a variety of social and economic effects associated with the construction and operation of a facility for the production of electric power. However, these effects can be estimated with a degree of accuracy only if they are analyzed within the context of the existing environment of the area proposed for the plant. A socio-economic profile is therefore presented in Section 8.1 to serve as background for the evaluation of the benefits and costs of the CRBRP project. Within this framework, the primary benefits derived from the establishment of a viable breeder technology as well as the secondary economic and social benefits are described in Section 8.2. Internal costs of plant construction and operation are then considered in Section 8.3 along with any external adverse conditions that might be imposed upon community facilities.

Population, employment, income and related socio-economic characteristics that presently exist in the study area are described in the following sub-sections. Where feasible, past trends and future projections are also discussed to provide a background for the evaluation of the effects of plant construction and operation. Major emphasis is placed on the four-county region of Anderson, Knox, Loudon and Roane where most of the impact is anticipated, but it should be recognized that this project is of national importance and therefore, has additional, broader impacts.

8.1.1 POPULATION

Oak Ridge, with less than one-third of its 28,319 residents located within a 10-mile radius of the plant site, is the only urban center of major population concentration in the area. Total population of the community has fluctuated slightly between an increase and a decrease over the past decades as illustrated in Table 8.1-1. More important than this total change, however, is the changing age group composition

that has taken place since 1960. The substantial decrease in the number of children under 15 years of age and in the number of adults in the 30-to 44-age group is reflected in Table 8.1-2. Consequently, the population profile for 1970 became comparatively broader at older age levels with a resultant median age increase from 27.2 in 1960 to 29.7 in 1970.[1] Projections to 1990 indicate a continued aging of the population as presented in Table 8.1-3.[2]

The rate of urbanization is another factor that will influence the growth patterns of population centers within the four-county area. General consensus among regional planners is that most growth and development may be expected to take place in the existing urban centers and municipalities. This includes, besides Oak Ridge, Kingston (pop. 4,142) and Lenoir City (pop. 5,324) which are within 10 miles of the Site.

Harriman (pop. 8,734), cut by the 10-mile radius and Loudon (pop. 3,728), which is just beyond, are also subject to these trends. Census data presented in Table 8.1-4 also tend to support this. Anderson and Roane Counties have not only experienced an increase in urban population in general, but the negative rural growth figure indicates a rural-to-urban migration pattern as well. For example, Roane county reported an urban increase of 46.3 percent even though total county growth was slightly negative and the rural population declined by 27.4 percent. It should be noted that a portion of this change was due to annexation and development patterns for specific communities must be examined in detail at the local level for reliable estimates. Comparison of these trends with county population projections in Table 8.1-5 can provide some general insight as to where and to what extent future growth might be expected.[3]

Present commuting patterns also serve to identify areas where people are likely to settle. Figure 8.1-1 is an illustration of these patterns for the Knoxville Metropolitan Area. There are some cases where travel

is adversely affected by topographic features or local drainage patterns. This is particularly true between Scott, Anderson and Union Counties. On the other hand, the large number of commuters between Knox and Anderson Counties can be attributed to the large percentage of Oak Ridge employees who are now living in Knoxville, either by choice or due to the housing shortage in Oak Ridge. These basic commuter patterns must be included in any attempt to measure the impact of increased population due to construction and operation of the CRBRP.

8.1.2 EMPLOYMENT

The employment picture in the study area has been influenced over the past 30 years by the development of AEC/contractor operations in the Oak Ridge community. An influx of professional and technical people from throughout the country and world has had an impact on the economy of the region[2] and altered the employment structure as is apparent in Table 8.1-6.

The percentage of professional employees in Anderson and Knox Counties (26% and 16%, respectively) is much higher than the state in general and again emphasizes the dominance of the Oak Ridge - Knoxville area in the regional economy. Manufacturing employment is also greater in Anderson (37.4%), Loudon (46.3%) and Roane (48.7%) Counties than for the State of Tennessee (30.6%) with government workers showing similar increased percentages.

Perhaps more important than the employment structure is the spatial distribution of those who are employed at the various Oak Ridge facilities. Figure 8.1-2 reinforces the commuter patterns cited earlier and points out the high percentage of persons working at Oak Ridge that reside outside the community. Annual surveys further indicate that this percentage continues to increase. R. J. Hart, Manager of the AEC Oak

Ridge Operations, has noted that employees of the several AEC facilities living outside Oak Ridge during 1972 totaled 9,266 (62%) compared to 5,670 (38%) who lived and worked in Oak Ridge. Totals for 1971 were 9,338 (61.1%) and 5,940 (38.9%), respectively.[4]

It is also apparent from Figure 8.1-2 that 3,045 persons or 20.4 percent of the total number employed at the Oak Ridge facilities are living in Knoxville. Although these numbers refer only to AEC/contract workers, it appears to be a safe assumption that similar trends might well be expected throughout the remainder of the employment sectors. In fact, manufacturing land use forecasters take these patterns into consideration in their projections and expect them to remain basically unchanged through 1990.[5]

8.1.3 INCOME

Income characteristics parallel employment trends outlined in the previous section. Dominance of Knox and Anderson Counties with $933,200,000 and $220,500,000 of annual personal income, respectively, is stressed as shown in Table 8.1-7. The higher per capita income (Knox-$3,364, Anderson-$3,387) is indicative of the higher wages commanded by the professional and technical employees of AEC/contract operations in the area.

Family income further substantiates this pattern with Anderson and Knox Counties reporting a higher median income and a larger percentage of families with annual incomes over $15,000. Conversely, each county has a lower percentage of families with income below the poverty level than the State of Tennessee (18.2%), as can be seen in Table 8.1-8. However, this does not hold in the counties of Roane and Loudon where the percentage of AEC/contract employees is somewhat lower.

This trend toward comparatively higher income is even more pronounced in the Oak Ridge household income distribution and the differential continues to increase. Approximately one-third more households received incomes of $10,000 and over in 1970 than in 1960, as shown in Table 8.1-9. This distribution for Oak Ridge families in the $10,000 and over category runs significantly higher than either state or national levels.[1]

The spatial distribution of the AEC/contractor payroll also parallels that of area employment and is reflective of the established commuter patterns. Figure 8.1-3 is an illustration of this distribution and further highlights the significance of the Oak Ridge/Knoxville proportion. These two municipalities account for 42.3 percent and 20.0 percent, respectively, or a total of 62.3 percent of the AEC payroll. The increasing importance of communities outside of Oak Ridge is also evident. R. J. Hart revealed that the Oak Ridge Atomic Energy program payrolls continue to exert a dominant impact on the economy of the region.[4] Records of AEC/contractor payroll distribution reveal that residents living in such areas as Knoxville, Clinton, Kingston and Lenoir City are receiving an increasing percentage of the total payroll.[4]

Hart's statement is supported by the fact that the commuters' share of wages rose one percent (from 56.7% in 1971 to 57.5% in 1972) while the Oak Ridge residents' share dropped one percent (from 43.3% in 1971 to 42.3% in 1972).[6]

Emphasis has been placed upon the dominance of AEC/contract employment and income in the area. Although this is certainly not the total source of economic support for the region, it is an indication of the spatial distribution of a significant part of the employment and income of Oak Ridge Operations. Estimates of future Oak Ridge employment to 1983 indicate that the AEC/contractor share of the work force will run close to the 70 percent level as shown in Table 8.1-10. Considering this along with the increasing percentage of these employees locating

in surrounding communities, it is apparent that the Oak Ridge operations personnel will serve as an indicator of where future growth and locations of employees may occur.

These comparatively higher wages and the increasingly wider distribution of Oak Ridge employees are considered in the evaluation of the economic impact of plant construction and operation.

8.1.4 HOUSING

Data on vacant housing for the area around the CRBRP Site are presented in Tables 8.1-11 and 8.1-12. The numbers contained in Table 8.1-11 indicate the actual housing available while the utilization rates in Table 8.1-12 provide some comparison between counties, the region and the State of Tennessee. The information on plumbing is used as an index of housing quality since the 1970 census did not include these types of data.

It should be noted that these census data are very general in nature and deal with average values. The data serve only to provide broad comparisons between the communities involved and the information must be used accordingly. More current and specific data are presented in the following section which deals with the impact on particular communities.

In general, the data contained in both tables indicate it would be more difficult to find a house for sale than one for rent throughout the four-county region. Also, the utilization rates shown in Table 8.1-12 show that Knox County has a higher percentage of houses both for rent and for sale than any of the other four counties, the general region or the State of Tennessee.

Another "real" factor important to the analysis of housing availability is price. Most of the recent housing construction in the area, partic-

ularly Oak Ridge, has been of the high-income single-family type.[7] The figures in Table 8.1-11 tend to verify this with the average value of units for Oak Ridge reported to be $18,056, considerably higher than the same statistic for Anderson County as a whole ($12,906). Knoxville, on the other hand, commands a lower average value than either Oak Ridge or Kingston.

Housing, with the exception of Knoxville, appears to be limited in most of the surrounding communities. Further, that which is available in Oak Ridge is of the high-income single-family type which might make it unavailable to the majority of workers at the CRBRP Site.

8.1.5 SCHOOLS

All schools in communities which could be impacted by the Clinch River Breeder Reactor Plant (CRBRP) construction and operation work force are listed in Table 8.1-13. The following description of current enrollment and capacity provides some insight as to where future enrollments are possible.

8.1.5.1 ANDERSON COUNTY

Schools operated by the Anderson County Board of Education in communities which might be attractive to employees on the CRBRP project are now near to or exceed their maximum capacity. No school in the county is within 10 miles of the CRBRP Site. No plans for expansion of the school system are forecast through 1990.

Two Clinton City Schools serve only grades kindergarten through sixth. Both schools have additional capacity which would be attractive to families with children in elementary grades. However, the Clinton Junior and Senior High Schools, operated by the Anderson County school system, both exceed the maximum desirable capacity.

Schools in Oak Ridge are experiencing a decline in enrollments. One elementary school closed last year and another, Elm Grove Elementary, is permanently closed as of June, 1974. Schools for all grades are significantly below their maximum capacity. Depending on available housing, the schools could adequately accommodate several hundred additional enrollments at all levels; this is particularly attractive due to the close proximity of the CRBRP to Oak Ridge.

8.1.5.2 KNOX COUNTY

Several communities in western and northwestern Knox County would be attractive to employees of the CRBRP project because they would provide temporary housing, particularly apartments. However, for families with school age children, the situation would be unsatisfactory because most schools in the area exceed their maximum capacity. Additional facilities are planned for 1980 and 1990 just to meet present and projected enrollment needs.

8.1.5.3 LOUDON COUNTY

Three Loudon County schools are within 10 miles of the CRBRP Site. All three are near to or exceed maximum capacity. The Loudon City schools offer room for accommodation of enrollments at all grade levels, but it is anticipated that additional schools will be needed in the area within 10 miles of the Site by 1980.

All schools operated by the Lenoir City Board of Education are within 10 miles of the Site and present enrollments are below maximum capacity.

8.1.5.4 MORGAN COUNTY

The community of Coalfield is within 10 miles of the Site and Oakdale is just beyond the 10-mile radius. Both could accommodate small enrollment gains at all grade levels. No new schools are forecast for 1980 and 1990.

8.1.5.5 ROANE COUNTY

Roane County High School is overcrowded and all other schools in the Kingston community are at or near maximum capacity. The Rockwood community offers accommodations for several hundred enrollments at the junior and senior high school levels with the elementary school near maximum capacity. Plans have been made for a single comprehensive high school to be located in the approximate geometric center of Roane County. It would accommodate all high school age children of the county, including those now attending the city high school in Harriman as well as those from Kingston, Rockwood, Oliver Springs and the rural areas of the county.

Schools operated by the Harriman Board of Education are near maximum capacity. Five of the seven schools in this system are within 10 miles of the plant site. Some building is planned for 1980 and 1990.

In general, there appears to be room for additional children at all grade levels in Oak Ridge and Lenior City and to a lesser extent in Loudon. The Knoxville school system, on the other hand, is overcrowded at all grade levels and Kingston schools are near to or exceeding capacity.

TABLE 8.1-1

POPULATION OF OAK RIDGE AND SELECTED PLACES, 1950-1970[1]

	1950	1960	1964*	1970
Oak Ridge	30,229	27,169	29,696	28,319
Anderson County	59,407	60,032	61,323	60,300
Roane County	31,665	39,133	39,358	38,881
Tennessee	3,292,000	3,567,089	3,805,000	3,923,687

* Special Census - U.S. Bureau of the Census

TABLE 8.1-2

AGE GROUP COMPOSITION OF THE POPULATION FOR OAK RIDGE, 1960 AND 1970[1]

Age	1960	1970	1960-1970 Percent Change
Under 5 years	3,219	2,123	- 34.1%
5-9 years	3,302	2,781	- 15.8
10-14	3,067	3,033	- 1.1
15-19	1,858	2,566	+ 38.1
20-24	1,308	1,870	+ 43.0
25-29	1,864	1,895	+ 1.6
30-34	2,394	1,667	- 30.4
35-39	2,858	1,678	- 41.3
40-44	2,295	2,126	- 7.4
45-49	1,966	2,550	+ 29.7
50-54	1,325	2,061	+ 55.5
55-59	744	1,605	+115.7
60-64	399	1,042	+161.2
65-69	240	547	+127.9
70-74	130	312	+140.0
75-79	100	209	+109.0
80-84	65	150	+130.8
85 & over	36	104	+188.9
TOTAL	27,169	28,319	+ 4.1

TABLE 8.1-3

AGE GROUP POPULATION TRENDS AND PROJECTIONS FOR OAK RIDGE, 1950 - 1990

Age Group	1950	1960	1970*	1980*	1990*
0 - 4	4,586	3,219	2,123	1,530	1,260
5 - 9	3,304	3,303	2,781	1,910	1,460
10 - 14	2,403	3,067	3,033	2,000	1,440
15 - 19	1,516	1,858	2,566	2,160	1,480
20 - 24	2,174	1,308	1,870	1,850	1,220
25 - 29	4,156	1,864	3,562	4,990	4,510
30 - 34	3,693	2,394			
35 - 39	3,062	2,858	3,804	3,170	4,460
40 - 44	2,145	2,295			
45 - 49	1,267	1,966	4,611	3,040	2,820
50 - 54	781	1,324			
55 - 59	466	744	1,605	3,470	2,440
60 - 64	280	399	1,042		
65 - 69	156	240			
70 - 74	114	130	859	1,990	2,610
75 and Over	126	201	463	1,070	2,480
Total	30,229	27,170	28,319	27,180	26,180

*Cohorts aggregated due to change in census data collection procedure

TABLE 8.1-4

COUNTY URBAN/RURAL POPULATION

	1970			1960			Percent Change 1960 - 1970		
	Total	Urban	Rural	Total	Urban	Rural	Total	Urban	Rural
Tennessee	3,923,687	2,305,307	1,618,380	3,567,089	1,864,828	1,702,261	10.0	23.6	-4.9
Anderson	60,300	33,831	26,469	60,032	32,067	27,965	0.4	5.5	-5.4
Knox	276,293	190,502	85,791	250,523	172,734	77,789	10.3	10.3	10.3
Loudon	24,266	9,052	15,214	23,757	8,791	14,966	2.1	3.0	1.7
Roane	38,881	20,788	18,093	39,133	14,205	24,928	-0.6	46.3	-27.4

Source: U.S. Department of Commerce
Bureau of Census
1970 Census of Population
Number of Inhabitants - Tennessee
Page 44-15

TABLE 8.1-5

COUNTY POPULATION PROJECTIONS

	1960	1970	1980	1990	2000	2010	2020
Anderson County	60,032	60,300	65,500	72,900	81,100	91,000	101,400
Knox County	250,523	276,293	306,200	337,200	370,600	411,400	459,700
Loudon County	23,757	24,266	26,600	29,400	32,500	35,800	39,300
Roane County	39,133	38,881	43,200	47,700	52,500	58,500	65,500

Source: Projection by the Tennessee Social Science Advisory Committee

TABLE 8.1-6

1970 OCCUPATION

(Percent of Employed Persons)

	Professional	Manufacturing	Government
Tennessee	12.3	30.6	16.1
Anderson	25.6	37.4	24.9
Knox	16.4	22.7	20.9
Loudon	7.8	46.3	17.7
Roane	11.6	48.7	17.0

Source: U.S. Census, 1970
General Social and Economic Characteristics

TABLE 8.1-7

1970 ESTIMATED TOTAL PERSONAL AND PER CAPITA INCOME OF RESIDENTS IN COUNTIES SURROUNDING CRBRP[8]

County	Total Personal Income	Per Capita Income
Knox*	$933,200,000	$3,364
Anderson*	220,500,000	3,387
Loudon**	55,317,000	2,275
Roane**	86,939,000	2,231

*Center for Business and Economic Research, University of Tennessee, Knoxville, Tennessee

**Bureau of Economic Analysis, Department of Commerce

TABLE 8.1-8

FAMILY INCOME

	Annual Median Income (dollars)	Percent Less Than Poverty Level*	Percent $15,000 Or More
Tennessee	7447	18.2	11.6
Anderson	8558	15.1	16.2
Knox	8195	14.0	14.6
Loudon	6900	18.4	6.4
Roane	7401	18.0	8.6

Source: U.S. Census - 1970 General Social and Economic Characteristics

*In 1969, the poverty thresholds ranged from $1,487 for a female unrelated individual 65 years old and over living on a farm to $6,116 for a nonfarm family with a male head and with seven or more persons (Table A). The average poverty threshold for a nonfarm family of four headed by a male was $3,745.

TABLE 8.1-9

HOUSEHOLD INCOME FOR OAK RIDGE,
THE STATE OF TENNESSEE AND THE UNITED STATES
1960 and 1970[1]

	Percent of Households						Change		
	1960			1970					
Cash Income	Oak Ridge	Tenn.	U. S.	Oak Ridge	Tenn.	U. S.	Oak Ridge	Tenn.	U. S.
$ 0 - 2,999	7.0	46.2	21.7	5.3	28.2	8.9	- 1.7	-18.0	-12.8
$3,000 - 4,999	9.0	21.2	20.3	5.8	14.5	10.4	- 3.9	- 6.7	- 9.9
$5,000 - 9,999	56.7	26.1	43.7	29.3	31.6	31.7	-27.4	+ 5.5	-12.0
$10,000 - and Over	26.7	8.6	14.3	59.5	25.9	49.1	+32.8	+17.3	+34.8

TABLE 8.1-10

ESTIMATES OF OAK RIDGE EMPLOYMENT
(Private, Local Government and Institutional)

Year	Industrial*	Retail**	Service+	Wholesale++	City∇	Schools∇	Hospital∇	Other	AEC and Cost-Type Contractors	Total	Percent AEC Contractors
1973	1,000	1,800	1,400	60	390	500	530	200	14,911	20,791	71.7
1974	1,100	1,840	1,420	60	390	490	530	200	15,163	21,193	71.6
1975	1,200	1,880	1,450	60	390	485	530	200	15,943	22,138	72.0
1976	1,400	1,920	1,480	60	395	490	540	200	16,147	22,632	71.4
1977	1,500	1,954	1,510	60	395	500	540	200	16,650	23,309	71.4
1978	1,600	2,030	1,540	65	395	505	540	200	17,226	24,101	71.5
1979	1,700	2,130	1,570	65	400	510	550	200	17,324	24,449	70.9
1980	1,800	2,230	1,600	65	400	515	550	200	17,200	24,560	70.0
1981	1,900	2,320	1,640	65	400	520	550	200	17,200	24,795	69.4
1982	2,000	2,400	1,670	65	405	525	560	200	17,200	25,025	68.7
1983	2,100	2,500	1,700	65	405	530	560	200	17,200	25,260	68.1

*The 1973 estimate is based on employment data collected by the Oak Ridge Chamber of Commerce. Annual increases of 100 for each successive year reflect a judgment concerning local capability to develop or recruit new industrial employment. Data are net of losses (failure, move-outs) and gains (new growth, move-ins).

**Estimated on basis of Eric Hill Associates' approach presented in "Population and Economy, Oak Ridge, Tennessee," 1969.

+Estimated in line with Eric Hill Associates' projection in "Population and Economy, Oak Ridge, Tennessee," 1969, p 61.

++See comments concerning wholesale trade employment in "Population and Economy, Oak Ridge, Tennessee," 1969, pp 52,53 and 55.

∇Based on local judgment concerning possible employment trends. The 1973 data were obtained from FY 1974 budget documents or telephone conversations with officials.

TABLE 8.1-11

HOUSING VACANCY INFORMATION
FOR AREA AROUND CRBRP SITE, 1970[9]

Counties	Vacant for Rent	Vacant for Sale Only
Anderson		
No. of year-round housing units	544	132
With all plumbing	388	103
Avg. value or monthly rent of all vacant units	$ 65.52	$ 12,906
Knox		
No. of year-round housing units	2,760	822
With all plumbing	2,412	759
Avg. value or monthly rent of all vacant units	$ 77.86	$ 17,834
Loudon		
No. of year-round housing units	145	44
With all plumbing	89	33
Avg. value or monthly rent of all vacant units	$ 50.35	$ 11,278

(Continued)

TABLE 8.1-11 (Continued)

Counties	Vacant for Rent	Vacant for Sale Only
Roane		
No. of year-round housing units	281	86
With all plumbing	229	78
Avg. value or monthly rent of all vacant units	$ 49.32	$ 15,481
Cities and Towns		
Kingston (Roane County)		
No. of year-round housing units	21	8
With all plumbing	20	8
Avg. value or monthly rent of all vacant units	$ 86.85	$ 17,000
Knoxville (Knox County)		
No. of year-round housing units	2,387	440
With all plumbing	2,179	407
Avg. value or monthly rent of all vacant units	$ 79.97	$ 13,100

(Continued)

TABLE 8.1-11 (Continued)

Cities and Towns	Vacant for Rent	Vacant for Sale Only
Loudon (Loudon County)		
No. of year-round housing units	18	1
With all plumbing	18	--
Avg. value or monthly rent of all vacant units	$ 62.67	--
Oak Ridge (Anderson & Roane Counties)		
No. of year-round housing units	340	56
With all plumbing	267	56
Avg. value or monthly rent of all vacant units	$ 73.53	$ 18,056
Harriman (Roane County)		
No. of year-round housing units	90	29
With all plumbing	77	28
Avg. value or monthly rent of all vacant units	$ 48.22	$ 12,885

(Continued)

TABLE 8.1-11 (Continued)

Cities and Towns	Vacant for Rent	Vacant for Sale Only
Lenoir City (Loudon County)		
No. of year-round housing units	44	15
With all plumbing	37	13
Avg. value or monthly rent of all vacant units	$ 50.27	$ 8,714
Rockwood (Roane County)		
No. of year-round housing units	32	10
With all plumbing	29	9
Avg. value or monthly rent of all vacant units	$ 46.25	$ 7,600

TABLE 8.1-12

VACANT HOUSING UNITS
AS PERCENTAGE OF ALL YEAR-ROUND HOUSING UNITS (9)

	Vacant for Rent		Vacant for Sale Only	
	Total Percent	With All Plumbing	Total Percent	With All Plumbing
Anderson	2.66	1.90	0.65	0.50
Knox	2.98	2.60	0.89	0.82
Loudon	1.72	1.05	0.52	0.39
Roane	2.12	1.73	0.65	0.59
4-County Area	2.77	2.31	0.80	0.72
Tennessee	2.55	1.84	0.87	0.67

TABLE 8.1-13

SCHOOLS IN COMMUNITIES WHICH COULD BE IMPACTED BY THE CRBRP CONSTRUCTION WORK FORCE

School System	No.	School	Grade Organization	Enrollment 1973	Maximum Capacity
Anderson County	1	Claxton Elem.	1- 6	645	750
	2	Clinton Jr. H.S.	7- 9	1,053	1,000
	3	Clinton Sr. H.S.	10-12	1,127	1,000
	4	Daniel Arthur Rehab.**		271	300
	5	Marlow Elem.	1- 6	179	300
	6	Norwood Elem.	1- 6	489	480
	7	Norwood Jr. H.S.	7- 9	345	500
	8	South Clinton Elem.	K- 6	356	450
Clinton	9	Clinton Elem.	K- 6	651	900
	10	N. Clinton Elem.	K- 5	139	200
Oak Ridge	11	Cedar Hill Elem.	K- 6	391	450
	12	Elm Grove Elem.++	K- 6	308	525
	13	Glenwood Elem.	K- 6	340	470
	14	Jefferson Jr. H.S.	7- 9	785	975
	15	Linden Elem.	K- 6	902	905
	16	Oak Ridge H.S.	10-12	1,674	2,000
	17	Robertsville Jr. H.S.	7- 9	784	800
	18	Willow Brook Elem.	K- 6	536	495
	19	Woodland Elem.	K- 6	569	680

(Continued)

TABLE 8.1-13 (Continued)

School System	No.	School	Grade Organization	Enrollment 1973	Maximum Capacity
Knox County	20	Ball Camp Elem.	1- 6	738	725
	21	Blue Grass Elem.	1- 8	205	240
	22	Cedar Bluff Prim.	1- 4	1,033	950
	23	Cedar Bluff Mid.	5- 8	1,235	960
	24	Fairview Elem.	1- 8	205	300
	25	Farragut Mid.	1- 8	904	750
	26	Farragut H.S.	9-12	1,448	700
	27	Farragut Prim.	1- 3	611	600
	28	Hardin Valley Elem.	1- 8	242	240
	29	Karns Elem.	1- 8	880	500
	30	Karns H.S.	9-12	1,004	750
Loudon County	31	Browder Elem.*	1- 8	111	130
	32	Eatons Elem.*	K- 8	638	638
	33	Glendale Elem.	1- 8	119	140
	34	Highland Park Elem.*	K- 8	380	400
	35	Loudon Elem.	K- 4	432	450
	36	Loudon H.S.	9-12	551	800
	37	Loudon Jr. H.S.	5- 8	337	337
	38	Philadelphia Elem.	K- 8	270	270
Lenoir City	39	Lenoir City H.S.*	9-12	910	1,000
	40	Lenoir City Jr. H.S.*	5- 8	472	800
	41	Nichols Elem.*	K- 4	401	500
	42	West Hill Elem.*	1- 6	113	270

(Continued)

TABLE 8.1-13 (Continued)

School System	No.	School	Grade Organization	Enrollment 1973	Maximum Capacity
Morgan County	43	Coalfield Elem.*	1- 8	375	
	44	Coalfield H.S.*	9-12	183	
	45	Oakdale Elem.	K- 8	349	
	46	Oakdale H.S.	9-12	161	
Roane County	47	Cherokee Elem*	1- 6	294	420
	48	Dyllis Elem*	1- 8	211	250
	49	Edgewood +	1- 6	110	
	50	Emory Elem.*	1- 8	118	
		Fairview Elem*	K-6	200	240
	52	Kingston Elem.*	K-6	675	660
	53	Kingston Jr. H.S.*	7-8	351	355
	54	Midtown Elem.	1-8	260	270
	55	Midway H.S.	7-12	327	420
	56	Oliver Springs Elem.	K-8	523	510
	57	Oliver Springs H.S.	9-12	428	480
		Paint Rock Elem.	1-6	240	300
		Pond Grove Elem.	1-6	188	300
	58	Ridge View Elem.	K-6	979	1,080
	59	Roane County H.S.*	9-12	814	750
	60	Rockwood Jr. H.S.	7-9	427	480
	61	Rockwood H.S.	10-12	352	600
Harriman	62	Cumberland Jr. H.S.*	7- 9	345	480
	63	Harriman Ctrl. Elem.*	1- 6	362	480
	64	Harriman H.S.*	10-12	504	720
	65	Margrave Elem.*	5- 6	109	150
	66	R. S. Bowers Elem.	1- 6	585	600
	67	S. Harriman Jr. H.S.	7- 9	473	510
	68	Walnut Hill Elem.*	1- 4	225	240

*Schools within 10 miles of CRBRP site.
**School for rehabilitation and special learning.
+Edgewood Elementary is within 3 miles of Site.
++Closed permanently June 1974.

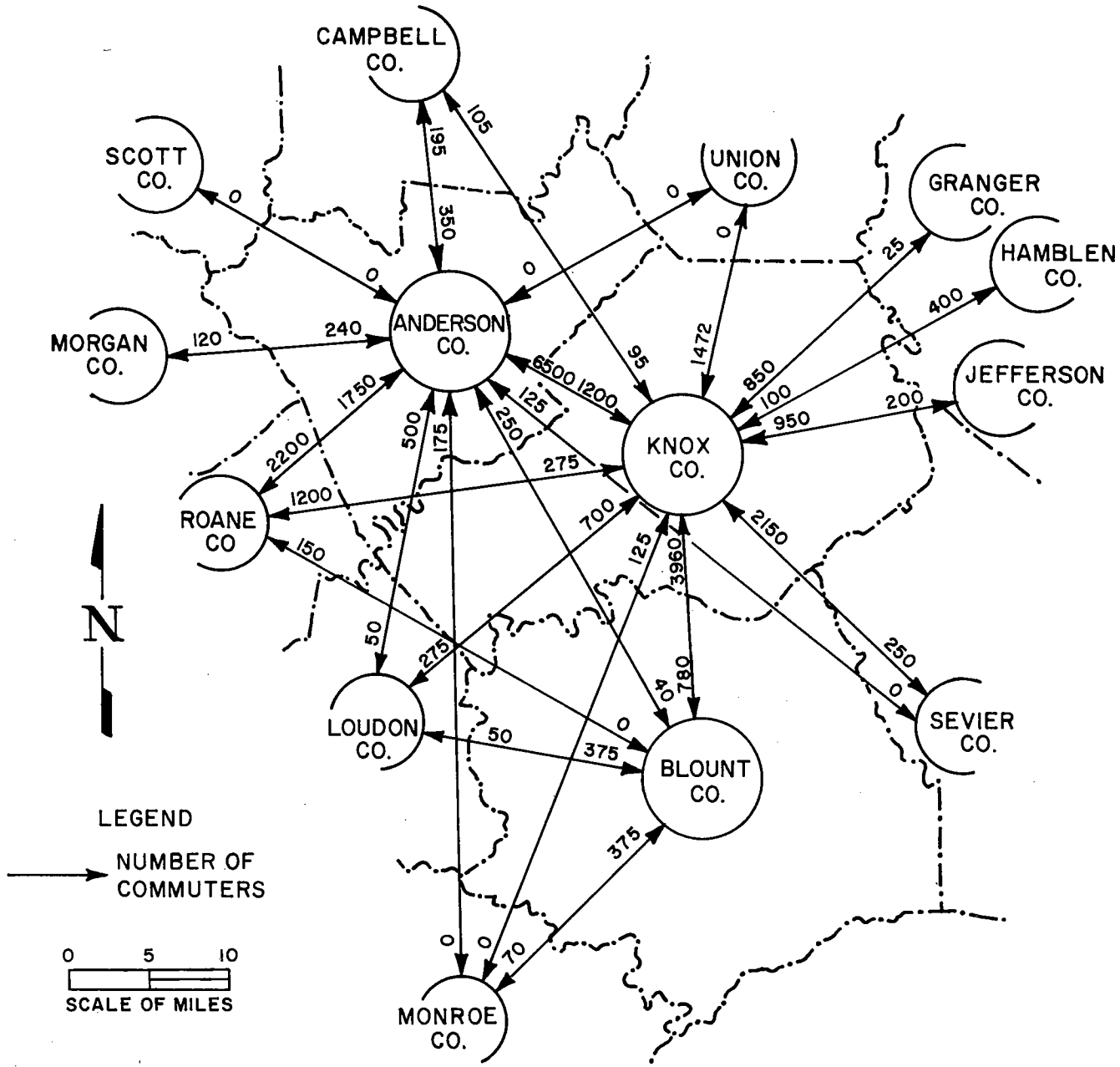

Figure 8.1-1 KNOXVILLE METROPOLITAN AREA COMMUTING PATTERNS

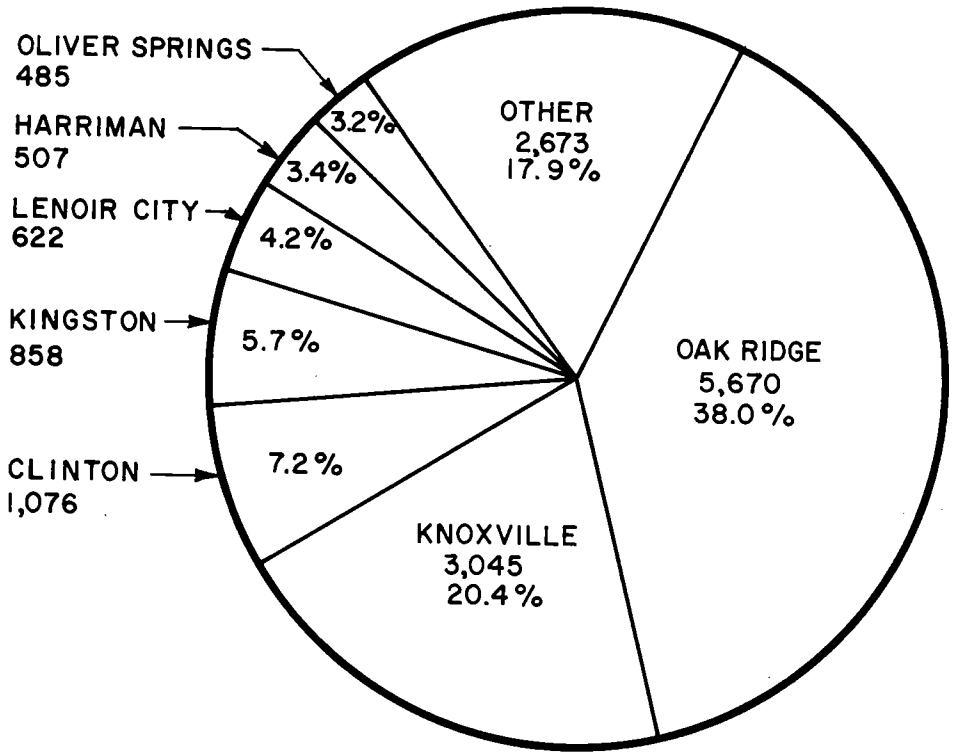

Figure 8.1-2 DISTRIBUTION OF EMPLOYMENT WORKING IN U.S. ATOMIC ENERGY COMMISSION PROGRAMS IN OAK RIDGE, 1972(10)

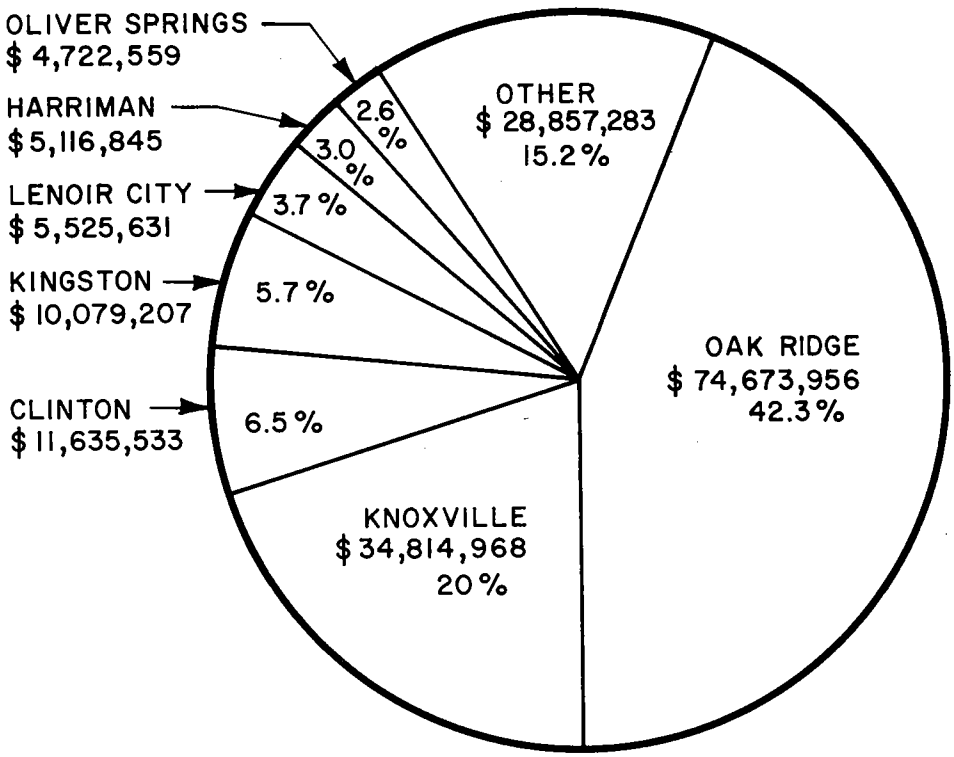

Figure 8.1-3 DISTRIBUTION OF PAYROLL FROM U.S. ATOMIC ENERGY COMMISSION PROGRAMS IN OAK RIDGE, 1972[10]

8.2 BENEFITS

The anticipated benefits which will be derived from the construction and operation of the Clinch River Breeder Reactor Plant can be reviewed in two categories. First are those primary benefits which are derived directly from meeting the objective of the proposed facility -- to provide a vital step in the development of a commercial breeder reactor industry which is of utmost importance to the Nation in general. There are also secondary benefits which, although not in themselves justification for the existence of the CRBRP project, are of real concern to the communities more immediate to the Site since they involve economic stimuli to the area in terms of employment and income along with the associated effects on the lifestyles of people.

8.2.1 PRIMARY BENEFITS

Although the production of power has been the one primary benefit most often cited as justification for commercial power plant construction in the past, it is of relatively little importance in this case due to the fact that the CRBRP is a demonstration plant. There are greater and more far reaching benefits that will have long range effects upon the entire nation which command more emphasis in this study.

The primary purpose of the project is to establish the viability of the LMFBR as a reliable, safe and environmentally acceptable source of electrical energy and to provide a major contribution to the technical knowledge that is necessary to establish a commercial LMFBR industry. One of the major resulting benefits, of course, is the more efficient use of raw uranium ore and the assurance of an extended supply of fissile material far beyond that attainable with present day water and gas cooled reactors. As a further result, this will reduce the strain now being placed upon the rapidly decreasing known supplies of petroleum and natural gas. More importantly, it will reduce the dependence of the United States

upon those nations which are now supplying those resources and at the same time improve the country's balance of payments. Although these kinds of benefits are long range and perhaps not as "measurable" as those of employment and income, they are as real as the relatively short range stimulus to the regional economy and must be weighed heavily on the benefit side of a cost/benefit analysis.

These benefits have been discussed in Sections 1.1 and 1.2 and will not be repeated here. Rather, this section will concern itself with the detail of secondary effects of plant construction and operation with its consequent impact upon the economic and social structure of communities in the more immediate area.

8.2.2 SECONDARY BENEFITS

In addition to the benefits of national importance resulting from the advancement of breeder technology which are unique to the CRBRP, there are those which are common to any project of this size that have an impact upon the economy and social structure of an area. These types of benefits of a more local nature are presented in the following subsections.

8.2.2.1 EMPLOYMENT AND INCOME

One of the main secondary benefits from any project the size of the CRBRP is the effect it will have in terms of economic expansion. More specifically, how many new jobs will it create and, consequently, how much will it add to local payrolls? In response to this, the estimated number of persons required for the construction and operation of the CRBRP during the initial 10-year period are presented in Table 8.2-1.

The estimated peak construction payroll for the CRBRP is presented in Table 8.2-2. These figures have been based on a percentage breakdown of employees for the Watts Bar Nuclear Plant and present TVA wage scales.

Although similar scales for the operations and technical personnel have not been finalized at this time, estimates have been made which should provide some indication of the expected income for this group. For example, an average annual salary of $13,250 for the operators appears reasonable based on pay scales at the Bellefonte Nuclear Plant.[1] Also since PMC technical people would command a higher salary than construction workers and operators, an average annual salary of $17,500 was considered within range.

The above pay scales, based on 1974 dollar values for comparison purposes, have been used to calculate the cumulative effect of income through 1983, as shown in Table 8.2-3. Considering these annual averages and the estimated number of employees in each category, $92,676,900 can be expected to be generated by the construction force alone with an additional $9,805,000 and $8,050,000 for the operations and technical groups respectively through 1983. The year with the single largest amount of revenue will occur during peak construction in 1979 with $29,373,200. The combined total for all three groups over the 10-year period amounts to $110,531,900. Considering the long term benefits, the salaries of the operational force can be extended over the 30-year life of the plant. For example, in addition to the initial 10-year period outlined in Table 8.2-3, the permanent employees can expect to receive another $44,077,500 between 1983 and the year 2010. This results in a grand total of $154,609,400 worth of benefits received from wages and salaries during construction and operational life of the plant.

Although the above figures are useful in comparing relative contributions of individual segments of the work force, any projection of monetary values into the future must account for escalation and discount rates that determine their present worth. Therefore, Table 8.2-4 reflects the present value of total estimated payroll assuming a net gain in wages of 3.5 percent (discounted 8%)[2] from the beginning of construction

through the 30-year life of the plant. This represents a present value of $352,737 in the year 2010 with a total cumulative effect of $108,119,944 over the entire period from 1974-2010.

8.2.2.2 INDUCED EMPLOYMENT AND INCOME

There are a variety of effects that cannot be directly attributed to the increased employment or income created by a new nuclear facility. This is evidenced by the many recent attempts to measure indirect or "induced" impact with the aid of economic and employment multipliers. The Appalachian Regional Commission, for example, has calculated an endogenous employment multiplier of 1.75 for Anderson County, Tennessee.(3) In other words, for every economic base job created, 0.75 other jobs are generated in local service and production activities. This is fairly consistent with the more general findings of the Chamber of Commerce of the United States which found that 68 additional people were employed in non-manufacturing jobs for every 100 new factory workers in a town.(4) These estimates should therefore provide some indication of the influence of the CRBRP on the local economy.

Applying the Anderson County multiplier of 1.75 to the expected 120 permanent employees at the Clinch River Site results in an increase of 90 more jobs in other employment sectors. Using an estimate of $7,000 average annual salary per each induced employee, an additional $630,000 per year will be generated by the nuclear installation over and above the direct salaries paid to plant employees. Extending this over the projected 30-year life of the plant results in a total induced effect on income of $18,900,000 from 1981 through 2010. Adding this induced benefit to the $154,609,400 received from direct payroll brings the total effect to $173,509,400.

Also, looking at this induced effect in present value terms results in a cumulative figure of $11,728,780 from beginning of construction through the 30-year life of the plant as shown in Table 8.2-5.

8.2.2.3 POWER PRODUCTION

Another secondary benefit of the CRBRP is the revenue produced from the electrical output from the plant. This estimated revenue during the operation period is $47 million (1974 dollars) based on TVA projected incremental power costs varying between 6.9 to 8.1 mills/kWh over the five-year demonstration operation period. This amount, to be reimbursed by TVA, is the same as the highest incremental cost TVA would have incurred at generating plants on its system which it would otherwise have used for producing the same amount of energy or which it would have incurred in acquiring such energy from other sources through interchange and/or purchase.

8.2.2.4 TAXES

The CRBRP will be owned by and located on land of the U. S. Government. Under existing laws neither the plant nor the land utilized for the plant site will be subject to state or local ad valorem taxes levied on privately owned real and personal property. Also, it is believed that material, supplies and equipment used in construction or which become a component of the plant and its associated distribution system are exempt from sales and use taxes levied under the Tennessee Retailers Sales Tax Act. The principle sources of tax benefits to the State and local governments appear to be:

1. Direct and indirect taxes on or resulting from additional wages and salaries, business activities and private property values attributable to employment and expenditures related to construction and operation of the plant. (See Section 8.2.1 for estimates of employment and payroll.);
2. Payments in lieu of taxes authorized pursuant to the Atomic Energy Act of 1954, as amended (42 USCA 2811 et seq.).

The Atomic Energy Act authorizes payments in lieu of property taxes to States and localities in which the activities of the commission are carried on and in which the commission has acquired property previously subject to State and local taxation. The Act provides that the commission will not make payments in excess of the taxes payable for such property in the condition in which it was acquired except where the commission's activities result in "special burdens" on the State or local government.

The Government-owned land utilized for the plant site could result in a small increase in AEC's in lieu of ad valorem tax payments to Roane County. An increase in the number of employees engaged in AEC activities due to construction of the plant and its operation during the demonstration period also may result in some additional AEC payments in lieu of taxes to Roane and Anderson Counties.

Although this addition to the local tax base may be considered a minimal factor in the net benefit/cost equation, it is only a small part of the overall contribution the CRBRP will make to the development of a whole new industry, research, nationwide employment and total environmental enhancement. It is this much broader aspect of the project as described in the first chapter of this report, supplemented by the local benefits outlined here, that results in the benefits far outweighing the costs in the final analysis.

TABLE 8.2-1

ESTIMATED NUMBER OF PERSONS WORKING ON CRBRP

	1974	1975	1976	1977	1978	1979	1980	1981	1982	1983	Peak 1979
Construction*	--	150	450	1,000	1,500	1,980	1,483	450	--	--	2,050
Operations	--	--	20	70	100	110	110	110	110	110	110
PMC**	20	60	60	80	80	100	30	10	10	10	100
Total	20	210	530	1,150	1,680	2,190	1,623	570	120	120	2,260

*Average number of workers during the year, except for peak 1979

**All technical personnel

TABLE 8.2-2

ESTIMATED PEAK CONSTRUCTION PAYROLL*[2]

Type	Number	Average Wage	Total
Management	51	$ 19,980	$ 1,018,980
Skilled	1,392	14,531	20,227,152
Semi-skilled	325	9,774	3,176,550
Unskilled	282	9,464	2,668,848
Total	2,050	$ 53,749	$27,091,530

*Based on percentage breakdown of employees for Watts Bar Nuclear Plant and present TVA wage scales for various personnel categories

TABLE 8.2-3

CLINCH RIVER BREEDER REACTOR

ESTIMATED PAYROLL

	Construction		Operations*		Technical**		
	Employed	Income	Employed	Income	Employed	Income	Total
1974	--	--	--	--	20	350,000	350,000
1975	150	1,982,300	--	--	60	1,050,000	3,032,300
1976	450	5,946,800	20	265,000	60	1,050,000	7,261,800
1977	1,000	13,215,000	70	927,500	80	1,400,000	15,542,500
1978	1,500	19,822,500	100	1,325,000	80	1,400,000	22,547,500
1979	1,980	26,165,700	110	1,457,500	100	1,750,000	29,373,200
1980	1,483	19,597,800	110	1,457,500	30	525,000	21,580,300
1981	450	5,946,800	110	1,457,500	10	175,000	7,579,300
1982	--	--	110	1,457,500	10	175,000	1,632,500
1983	--	--	110	1,457,500	10	175,000	1,632,500
Total	7,013	92,676,900	740	9,805,000	460	8,050,000	110,531,900

*Average Annual Salary $13,250

**Average Annual Salary $17,500

TABLE 8.2-4

PRESENT VALUE OF TOTAL ESTIMATED PAYROLL

Year	Payroll (in dollars)	Escalated (3.5%)	Discounted (08%)	Cumulative
1974	350,000	--	--	--
1975	3,032,300	3,138,430	2,905,954	2,905,954
1976	7,261,800	7,779,021	6,669,257	9,575,211
1977	15,542,500	17,232,247	13,679,513	23,254,724
1978	22,547,500	25,873,774	19,017,996	42,272,720
1979	29,373,200	34,886,147	23,742,925	66,015,645
1980	21,580,300	26,527,698	16,716,950	82,732,595
1981	7,579,300	9,642,986	5,626,590	88,359,185
1982	1,632,500*	2,149,690	1,161,411	89,520,596
2010	1,632,500	5,632,559	352,737	108,119,944

*Payroll will remain constant through the year 2011

TABLE 8.2-5

PRESENT VALUE OF INDUCED ESTIMATED PAYROLL

Year	Payroll (in dollars)	Escalated (3.5%)	Discounted (08%)	Cumulative
1974	105,000	--	--	--
1975	315,000	326,025	301,875	301,875
1976	420,000	449,914	385,729	687,604
1977	784,000	869,234	690,026	1,377,630
1978	945,000	1,084,409	797,073	2,174,703
1979	1,099,000	1,309,267	891,065	3,065,768
1980	735,000	903,502	569,359	3,635,127
1981	630,000*	801,535	467,688	4,102,815
2010	630,000	2,173,668	136,125	11,728,780

*Payroll will remain constant through the year 2011

8.3 COSTS

If the Clinch River Breeder Reactor is to become an asset to the region and the nation as a whole, the benefits derived from the construction and operation must ultimately exceed the costs. These costs include not only the capital investment for land acquisition, material and labor, but also the inherent social costs related to any new industrial development of this type. More and more government officials are now being forced by public opinion to account for these in the evaluation of net benefits to the area.[1] There has been increasing realization, for example, that industrial growth often brings rising social costs in terms of overcrowded housing, schools and highways as well as noise, air and water pollution. Although these variables are much more difficult to measure than dollar values assigned to the economics of construction and operation, they must be considered in any complete impact evaluation.

8.3.1 INTERNAL COSTS

The CRBRP will be an asset to the nation. Even though the direct benefits derived from the CRBRP may not, by themselves, be of such value in the short run as to offset the cost of construction and operation, the development of a viable breeder industry will justify the overall costs and make the development of a new industry possible with great benefits for the future.

Internal cost figures for the CRBRP will ultimately reflect the cost of solving the problems of achieving reliable electrical generation with LMFBR technology along with the environmental considerations of assuring clean and safe power generation.[2]

Project cost estimates are presented in Table 8.3-1 which shows a plant investment of $868,600,000.

In addition, the $427,100,000 for development costs and the $182,800,000 for operating costs brings the total program costs to $1,478,500,000.

8.3.2 SHORT-TERM EXTERNAL COSTS

There are further effects which go beyond the immediate Site area which have impact on the comfort and well-being of the community and region in general. As with any project the size of the CRBRP, a major concern is with the influx of people from outside the community and the associated impact on local facilities and services. In this case, four major components of this influx must be considered for a thorough understanding of this impact:

1. Professional employees;
2. Technical and clerical workers;
3. Construction force with mobile homes; and
4. Construction force in conventional housing.

An early premise of this study was that Oak Ridge, a nearby center offering a variety of goods and services, would sustain the major part of any impact. Further investigation, however, has indicated that this will not be the case. The reason for this lack of impact on the community is the shortage of adequate housing to accommodate the majority of newcomers to the area. The few single family homes that are available or are being built are in the price range of $40,000 plus, which makes them unavailable to all but the high salaried professional or management people.[3] This, of course, accounts for only a very small percentage of the total influx. There are several apartment complexes planned, as shown in Table 8.3-2, but they may not materialize to the extent anticipated since they are presently behind schedule due to "money problems" related to inflation and rapidly rising construction costs.[3] Furthermore, they would barely accommodate those presently seeking residence in Oak Ridge. This is apparent from the large number of workers in the community that now must commute daily from Knoxville.

Estimates of future employment in the Oak Ridge economy will further strain the housing market even if construction were to progress at an optimistic level, as can be seen in Table 8.1-10.

As is generally true of such projects, the bulk of the effect may be caused by the comparatively large influx of workers during the peak construction period. The extent of impact created by this work force, however, will be determined by the number of employees drawn into the area due to the lack of local supply and, conversely, by the ability of the local labor pool to fulfill the demand. In an attempt to assess this influx, construction employment demand is broken down into its major components in Table 8.3-3 and the potential supply for each category is reflected.[4] It should be noted that these numbers are considered "potential" supply in that they may not be readily available due to present employment. In conjunction with these figures, other major construction projects in the area must be examined in relation to their comparable ability to compete for this labor supply. For example, the Exxon Nuclear Fuels Plant near Loudon is tentatively scheduled to begin construction in January 1976 with peak employment possibly reaching 1,200 to 1,300 workers.[5] Expansion is also anticipated at the K-25 and X-10 facilities in Oak Ridge; this is expected to peak at 1,800 workers in 1976.[6] Not only are the absolute numbers important, but also the time schedules and the degree to which these various projects "overlap" have significant bearing on influx estimates. Figure 8.3-1 is an illustration of the time relationship of peak demand for each of the construction schedules considered pertinent to the CRBRP curve.

Judging from the labor supply data in Table 8.3-3, the combined construction curves in Figure 8.3-1 and most importantly, past experience of similar nuclear power plant construction in the area, it is unlikely that more than 10 to 20 percent of all construction workers will originate from outside the Knoxville labor area.

This would be a maximum of 410 additional construction workers at the height of construction.

It is extremely difficult to determine where incoming people are going to locate in a region. There are some fairly reliable assumptions that can be made, however, based on past experience at similar nuclear power plant projects throughout the TVA region. For example, it has been found recently that up to 50 percent of the incoming construction force are living in mobile homes and that they tend to locate as near as possible to the project site.[7] This trend can be expected to continue for the CRBRP. In this case, "near as possible" eliminates the immediate site and the large surrounding area within the Oak Ridge Corporate limits since there is an ordinance which bans mobile homes. The next most probable location would be along Route 58 between the Gallaher Bridge and Interstate 40 as shown in Figure 8.3-2. There are presently four mobile home courts in the area, two of which are planning to expand. Holiday Haven Trailer Park anticipates adding nine more trailer pads and another nine pads are to be added at Ballew Trailer Park.[8] The remaining two parks are at maximum capacity. Although there is the possibility of new trailer parks developing along that stretch of highway, it is unlikely that this section could absorb all of the 205 incoming mobile homes that are estimated for the peak year 1979; see Table 8.3-4. Most of these mobile homes will probably be dispersed along the Kingston Pike between Kingston and Lenoir City near existing trailers, as shown in Figure 8.3-2. Two additional factors could influence the location of this group within Roane County. First, if the Exxon project maintains its tentative schedule, most of the Lenoir City and Loudon area will be saturated with that labor force; thus, reducing the probability of CRBRP construction people settling there. Second, since the only access road to the Site will be from Route 58 on the western side, the Roane County

section of the Kingston Pike would be more attractive to the CRBRP construction workers.

Although housing poses no problem for this 50 percent of the estimated influx of mobile-home owners, their location within Roane County could have an impact on that school system. For example, if TVA's experience with past projects of this nature is a reliable indicator, 65 percent of the mobile-home incoming work force can be expected to be married and bring approximately 1.0 school age children with them.[7] Consequently, as shown in Table 8.3-3, there is the possibility of an increase of up to 135 students during the peak construction period that would have to be accommodated. However, assuming that all mobile home dwellers are married, the maximum number of school age children would only reach 205. Although schools are near capacity in parts of Roane County, particularly in Kingston, the normal decrease in enrollment of 150 to 200 students per year as a result of lower birth rates will help alleviate the impact of incoming students.[9] This figure would pose no problem if plans for a new elementary school at Midway and the comprehensive high school in Roane County were to materialize.

The remaining construction workers (without mobile homes) and most of the technical personnel will probably be searching for conventional housing. Accommodations do exist in some of the surrounding communities such as Kingston and Lenoir City; however, housing is relatively scarce and can absorb only a small percentage of the total influx. Many of the incoming apartment dwellers may, therefore, be drawn toward West Knoxville. First, it is quite common, as witnessed in the previous commuting patterns, for large numbers of Oak Ridge employees to commute daily from Knox County. Second, there is an abundance of new apartments available with additional units approved or planned for the near future as can be seen in Table 8.3-5.

Furthermore, the present complexes are running at a low occupancy rate (approximately 40%) and are within the price range of the construction force personnel (a sample check revealed an approximate monthly average rent of $155). In other words, due to the tight housing market in Oak Ridge and the surrounding area, a large percentage of the total influx may be attracted to the apartment complexes in West Knoxville.

It is impossible to determine the precise number of incoming workers that might locate in conventional housing in Knoxville because there are inadequate data to assess this type of facility in areas closer to the Site. It is apparent, however, that the Knox County school system, which is already severely overcrowded, may expect an influx of a substantial number of students. A reasonable estimate based on the above housing and influx data could range from 150 to 200 new students.

There are also several factors associated with nuclear plant construction and operations not related to employment and income which have a significant impact on the economy of a region. For instance, TVA's experience at Browns Ferry indicates that 0.5 percent of the construction cost is spent on purchases and special contracts in the local economy.[7] Although this can be considered beneficial in most cases, the concern arises as to whether or not the temporary additional demand might result in a sudden drop in economic activity at the end of the peak construction period.

The impact it might have on the local trade is based upon the estimate of approximately $868,600,000 of plant investment. Calculation of 0.5 percent of that value yields an increase in wholesale trade of $4,343,000 to be distributed throughout the local economy. Comparing this figure with the total wholesale trade volume of $698,831,000 for the four-county region around the CRBRP, shown in Table 8.3-6, would indicate that existing establishments of the area are capable of accommo-

dating the increased demand. In fact, this would only amount to an approximate 0.62 percent increase in annual sales. Even assuming that some of the smaller but technically sophisticated firms in Anderson County might capture a significant portion of the local expenditures, it would be distributed over several years and no considerable physical or personnel expansion could be expected. This will hold even if the original cost estimates are extremely low and a sharp economic decline is unlikely at the end of the construction period.

A problem commonly experienced during the construction phase of such projects is related to traffic congestion. In the case of the CRBRP, a substantial increase in load can be anticipated on Route 58 between Oak Ridge and Interstate 40. This artery presently carries average daily traffic (ADT) in excess of that generally recommended for normal two lane highways and should be considered an area of concern. The congestion would be substantial if the shift changes at the AEC installations coincided with the "rush hour" associated with the CRBRP. Time schedules and current traffic counts are unavailable which prohibits an adequate assessment of the problem at this time. It should be considered as a potential trouble spot, however, and monitored for developing problems and utlimate mitigating action.

8.3.3 LONG-TERM EXTERNAL COSTS

Long-term external costs stem from the changes that may occur throughout the lifetime of the project. These costs may range from minor inconveniences to a direct loss of revenues. By and large, however, the operation of a nuclear electric generating facility creates few direct or indirect socio-economic long-term external costs.

There are 1,364 acres within the Site boundaries. This acreage is government-owned land in the custody of TVA and the area has been restricted from public use. As a result, there is little change expected in terms of impairment of such things as recreation, land or water use. For example, although the river bank will be marked and posted to prevent private or commercial use of this area, activities on the Clinch River related to river traffic and fishing will not be affected by the CRBRP operations.

One of the most noticeable long-term effects will be on local meteorology since a vapor plume formed by the evaporation of water will be visible above the cooling towers. This may form fog at ground level on rare occasions and create icy conditions on road systems in sub-freezing temperatures. These environmental effects are discussed in more detail in Section 5.0.

It is not anticipated that the operation of the plant will increase local government costs. The 120 permanent employees will be dispersed throughout West Knoxville and the several smaller communities near the Site. Therefore, no one community or local government unit is expected to support the total work force alone. As a result, there will be no need for additional administration, equipment or facilities required to accommodate this minimal population increase.

There will be no significant deterioration of aesthetic or scenic values in the vicinity of the CRBRP. Based on past experience in other areas with similar nuclear power plants, the project often became obscure once the construction phase was completed. In fact, most local residents gave very little thought to the nuclear installation unless the plant's presence was questioned by outsiders.

Investigation of the Site has revealed no significant scenic or natural landmarks and the only site of local historical interest is the Hensley

Cemetery which will be accessible to members of the family. Archaeological sites were excavated; any further investigations will be completed by the time construction begins. Therefore, construction and operation of the CRBRP will have no significant adverse effect on historical, scenic, cultural or natural landmarks. This is discussed in detail in Section 2.3.

TABLE 8.3-1

CRBRP DEMONSTRATION PLANT

PROJECT COST ESTIMATE

Plant Investment		Cost (Millions of $)*
NSSS		
RM Equipment		$335.2
AE Equipment		12.7
Construction		246.7
RM Engineering		59.3
AE Engineering		59.3
	Subtotal	713.2
BOP		
Equipment		48.4
Construction		82.0
Engineering		25.0
	Subtotal	155.4
Development Cost		
RM Engineering		240.7
Research and Development		114.1
PMC Staff (Construction)		26.0
Contractual Services		10.1
Insurance (Construction)		1.2
Safety Systems		35.0
	Subtotal	427.1
Operating Cost		
PMC Staff (Operating)		11.5
Insurance (Operating)		8.4
Operating and Maintenance		87.6
Fuel fabrication (Initial Core)		67.4
Fuel fabrication (Reload Cores)		84.1
Special Nuclear Material		16.6
	Subtotal	275.6
Revenue(Credit)		(92.8)
Program Cost		
Plant Investment		868.6
Development Cost		427.1
Operating Cost		182.8
Total Program Cost		$1478.5

* Values include contingency and escalation

TABLE 8.3-2

APARTMENTS PLANNED

(Oak Ridge, Tennessee)

Description	Available
Briarcliff PUD Emory Valley 1-, 2-, and 3-bedroom townhouses (condominiums)(166 total)	1975
Lucaya Apartments Emory Valley 1-, 2-, and 3-bedroom apartments (140 total)	1975
Oakcliff PUD West Hills 1-, 2-, and 3-bedroom apartments and townhouses (393 total)	1976
Tara Hills Woodland Area 1-, 2-, and 3-bedroom apartments (214 total)	Fall, 1974
Greentree Village 130 Townhouses	1977-1978
Wilderness Trace Condominiums 48 Townhouses	Summer, 1974
Condominium townhouses, six units. West Outer and Walnut Lane	Spring, 1974

TABLE 8.3-3

PEAK CONSTRUCTION EMPLOYMENT[5]

	Demand	Supply
Carpenters	200	1,100
Electricians	200	1,000
Iron Workers	135	675
Steamfitters	200	850
Total	735	3,625

TABLE 8.3-4

WORK FORCE COMPOSITION

(1974 - 1983)

	Influx of Construction Workers	Construction Worker Families	School Age Children	Mobile Home Dwellers	Influx Technical and Operation Employees	Total Influx
1974	--	--	--	--	16	16
1975	30	20	20	15	48	78
1976	90	59	59	45	64	154
1977	200	130	130	100	120	320
1978	300	195	195	150	144	444
1979	396	257	257	198	168	564
1979-Peak*	410	267	267	205	168	578
1980	297	193	193	144	112	409
1981	90	59	59	45	96	186
1982	--	--	--	--	96	96
1983	--	--	--	--	96	96

*All other figures are based on average annual employment

TABLE 8.3-5

WEST KNOXVILLE APARTMENTS

Name of Apt. Units	Under Const.	Completed	Approved
Capella		451	
Deane Hill Apts.		160	
West Town Garden		227	
Bearden Arms		8	
Kingston Part Apts (Testerman)		270	
Kingston Square		228	
Ebenezer Road (Nova, Inc.)	625		
Beaverton Road		12	
Timbers West (Quad-plex)		68	
Timbers West (Apts)		321	
Elderberry, Teaberry, Flanders		120	
Cambridge Arms		48	
Cherokee West		46	24
Testerman (Peters Rd)			713
West Towne Terrace			540
Diffet (Elderberry, Gleason)	449		
Tenn. Rentals (Gleason Rd)	160		
Chip-Co			190
Summit Circle			146
Ashley Oaks	34		
15th Street Co. (Lonas Rd)		232	
Big Oak		150	
Golden			200
Town House		30	
Caveton Forest	462		
Sans Souci		216	
West Town Manor		150	
West Gate Terrace		228	
Nightingale Lane		208	
Williamsburg Townhouses		32	
Raillery Apartments		200	100
Crossroads West		110	
Kimbraugh Cavernaugh	168		
Richard Adams (Middlebrook)	16		
Sunflower Apts.		172	
Greentree			146
North Gate Lane			400
Londontown Apts			208
15th Street Co. (unnamed)			132
CGS (Cedar Bluff Rd)	600		
Jewell Builders of Ohio	226		774
Wrights Ferry Rd.		12	
Sub-Totals	2,740	3,699	3,573
Grand Total			10,012 Apts.*

*Apt. totals as of August 10, 1973

TABLE 8.3-6

1967 WHOLESALE TRADE IN COUNTIES
AROUND PROPOSED CRBRP[2]

County	Wholesale Trade
Knox	$666,422,000
Anderson	9,870,000
Loudon	5,525,000
Roane	17,014,000
Total	$698,831,000

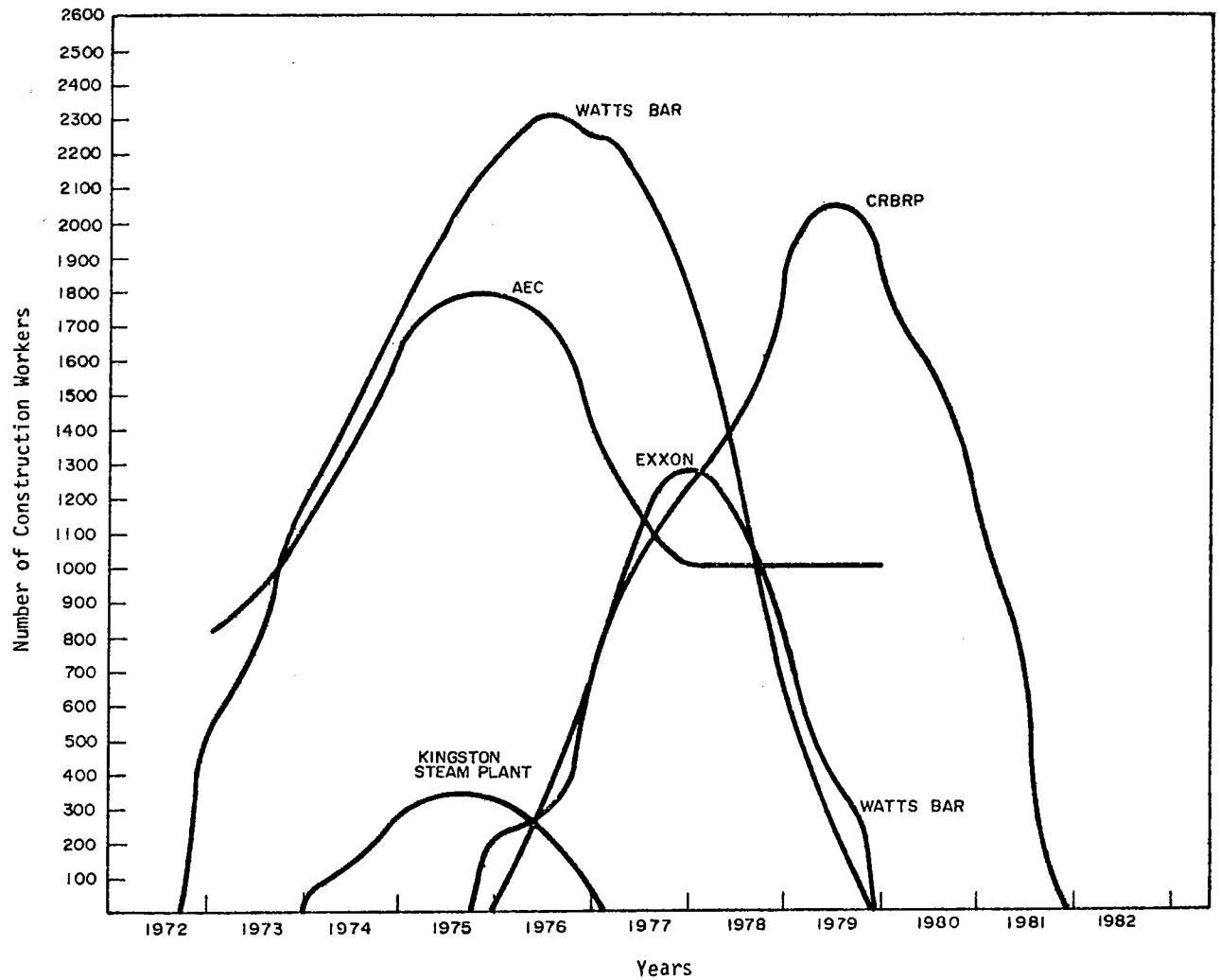

Figure 8.3-1 MANPOWER CURVES FOR MAJOR REGIONAL CONSTRUCTION PROJECTS

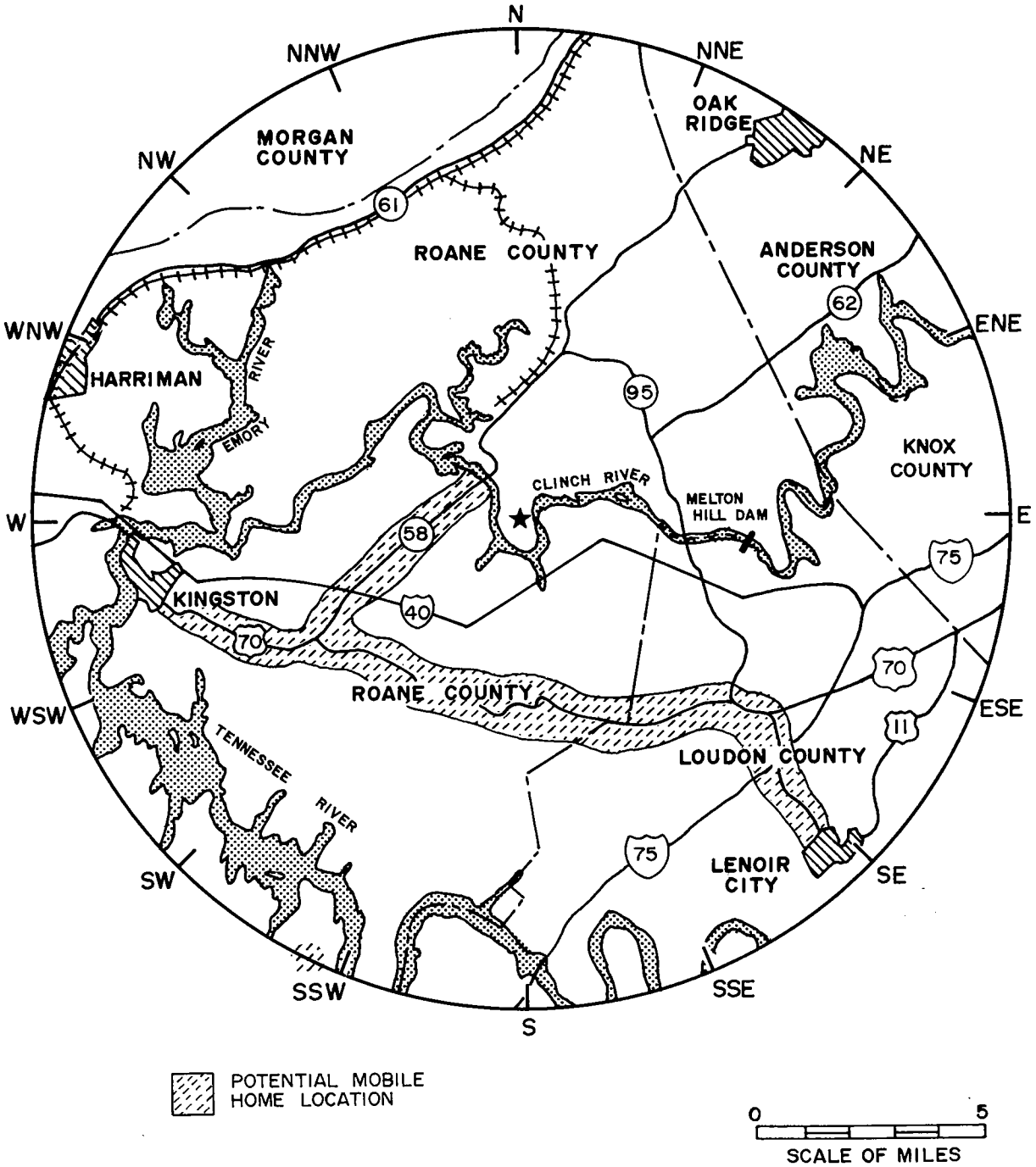

Figure 8.3-2 POTENTIAL MOBILE HOME LOCATIONS

8.4 SUMMARY

If the Clinch River Breeder Reactor is to become an asset to the region and the nation as a whole, the benefits derived from the construction and operation must ultimately exceed the costs.

In addition to the capital required for plant construction, there are several short-term costs which have been revealed that must be considered. The most significant of these appears to be the straining of the tight housing market in communities surrounding the Site and the addition of students to the already overcrowded Knoxville school system during the peak construction period. Also, a potential problem exists related to traffic congestion on Highway 58 if the CRBRP and AEC operations shift changes occur simultaneously. These are temporary concerns in that they end upon completion of construction. Based on past experience and investigations conducted at the Site, there are no adverse effects anticipated in the long run.

On the other hand, there are far reaching benefits to be derived from the advancement of breeder technology that will prove to be an asset to the nation for many years in the future. These benefits, in conjunction with the stimulus to the local economy, indicate that the CRBRP will provide many positive factors that far outweigh the few short term costs outlined above. A more detailed analysis of this benefit/cost relationship is presented in Section 11.

9.0 ALTERNATIVE APPROACHES AND SITES

9.1 ALTERNATIVE APPROACHES

The LMFBR Program is a part of AEC's overall long-range research and development program.[1,2] Alternative energy sources to the LMFBR have been discussed and analyzed in the AEC's Program Environmental Impact Statement.[1] This statement and its analysis of alternative energy sources amply demonstrates the need for vigorous pursuit of the LMFBR Program. Since the CRBRP is a necessary step in the LMFBR Program alternative energy sources for the CRBRP are not again considered in this report. The general objectives of the LMFBR Program, the need for it, and, in particular, the discussion of the need for a demonstration plant as part of that program, are summarized in Section 1 of this report. Since the primary purpose of the CRBRP is broader than the production of electrical power, the treatment of the alternative of not creating new generating capacity in accordance with Regulatory Guide 4.2 is not appropriate here.

The operation of the CRBRP supports the overall LMFBR Program and provides the necessary technological base leading to development of larger commercial-sized liquid metal fast breeder reactors. Moreover, the CRBRP represents the development of a technology with predicted performance, industrial support, a broad base of technological experience, and proven basic feasibility. Alternative energy sources to the breeder reactor which are available with today's technology represent vast commitments of depletable natural resources. Even hydroelectric power requires the use of large land areas resulting in lost resources and radical changes to local ecology. The time to depletion of non-renewable reserves for power production using conventional methods, such as fossil fuels and present light water reactors of the non-breeder type with plutonium recycle, is shown in Figure 9.1-1. Fossil fuel

figures have been taken from those compiled by M. King Hubbert of the U.S. Geological Survey[3,4] and data on uranium from the U.S. Atomic Energy Commission.

This illustration shows that, if the world continues at its present six percent energy growth rate, all conventional fuels (oil, gas, coal) will be gone by the middle of the next century. If the world energy growth rate drops to the United States' rate of four percent, the depletion point will be extended to a point near the end of the 21st century. Conventional systems using depletable reserves are presently the only proven alternatives to the breeder reactor for meeting the Nation's energy needs. One of the principal advantages of the LMFBR is that it conserves natural resources. This advantage is shown by comparing the U_3O_8 requirements for the period 1970 through 2020 with and without the breeder reactor. Table 9.1-1 indicates that having the breeder available by 1987 conserves almost four million tons of uranium resources that may have to be obtained by mining vast amounts of low grade ore (about 50 to 100 billion tons). Further, the uranium requirement if the breeder is utilized, reaches an annual maximum of about 105,000 tons of U_3O_8 in the year 1998. On the other hand, without the breeder a growing industry reaches an annual maximum requirement of about 280,000 tons in the year 2020. If these and other advantages of the LMFBR are to be realized on a broad commercial scale, then the results of the LMFBR Program must be translated into large scale hardware.

The CRBRP will demonstrate the technical performance, reliability, maintainability, safety, environmental acceptability, and economic feasibility of an LMFBR power plant on a utility system and serve as the next logical step toward the overall LMFBR Program objective of a commercial LMFBR economy.

TABLE 9.1-1

COSTS AND URANIUM AND SEPARATIVE WORK REQUIREMENTS WITH AND WITHOUT A BREEDER[1]
(Most Likely Projections for Energy, Uranium and Breeder Development)

	With Breeder	Without Breeder
Cumulative Requirements		
U_3O_8 1970-2020 (tons)	2,450,000	6,300,000
Separative Work Duty 1970-2020 (1000s of SWUs)	1,820,000	6,500,000
Maximum Annual Requirements		
U_3O_8 (tons)	105,000 (1998)*	280,000 (2020)*
Separative Work Duty (1000s of SWUs)	81,000 (2000)*	436,000 (2020)*
Energy Costs ($ billions)		
Undiscounted	6598.2	8322.4
Discounted at 7.5%	464.1	524.0
Benefits, discounted at 7.5%	59.9	
Fuel Cycle Costs in Year 2020 (mills/Kwhr)		
LWR	2.5	6.4
LMFBR	0.2	

* Year of maximum requirement.

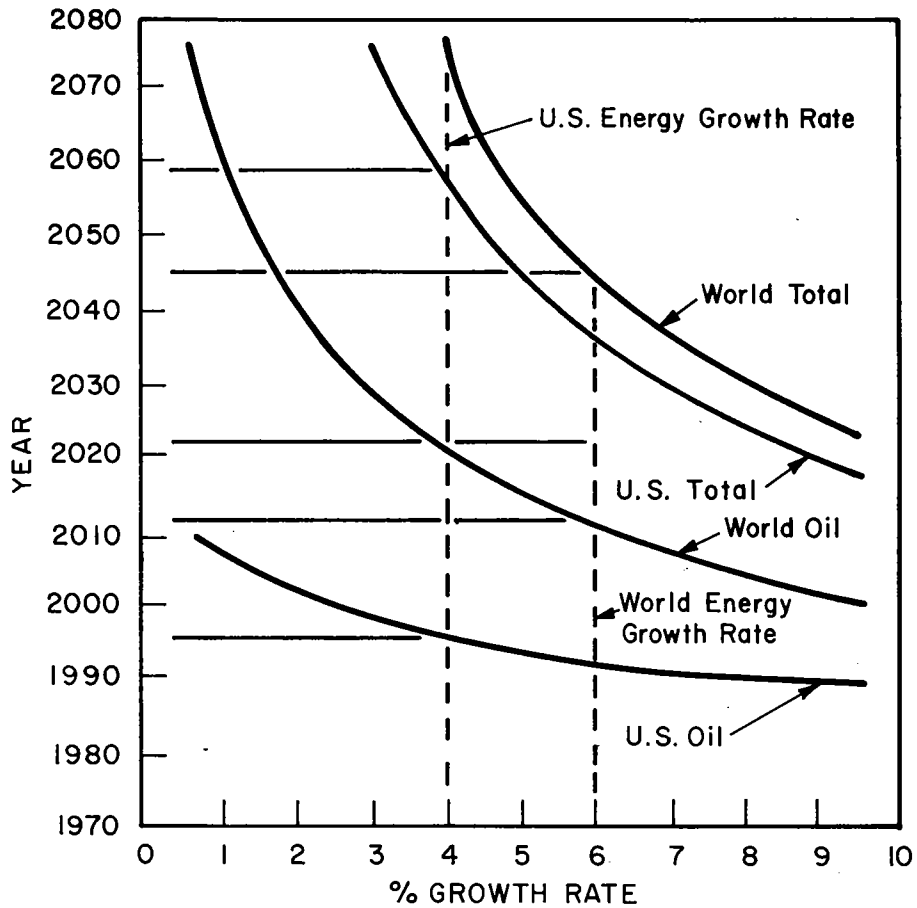

Figure 9.1-1 YEAR OF DEPLETION FOR NATURAL OCCURRING FOSSIL FUEL SOURCES (INCLUDING URANIUM ORE RESERVES) VS. PROJECTED ENERGY CONSUMPTION RATES(3,4)

9.2 ALTERNATIVE SITES AND PLANT ARRANGEMENTS

In late 1971, the AEC appointed a Senior Utility Steering Committee and Senior Utility Technical Advisory Panel to assist them in selecting a utility partner to design, build and operate the demonstration plant. Proposals were submitted to the Liquid Metal Fast Breeder Reactor (LMFBR) Committee and AEC, by groups of utilities interested in participating in the demonstration plant program. Each of the principal sites advanced in the four proposals that were received appeared to meet the general requirement: The proposed site should require "no unusual design features or special consideration in licensing."[1] The Steering Committee noted "that increased siting flexibility could be associated with the Commonwealth/TVA arrangement . . . ."[2]

The Tennessee Valley Authority (TVA) and Commonwealth Edison Company (CE) proposal was subsequently accepted by the Committee and the AEC. This joint proposal by TVA and CE for building and operating the Nation's first large-scale (300 to 500 MWe) LMFBR demonstration plant included guidelines for selecting the site of the LMFBR demonstration plant. Guidelines included building the plant on the TVA system preferably at an existing electric generating plant which would utilize the steam from the LMFBR Nuclear Steam Supply System (NSSS). The proposal specifically named the John Sevier plant as a potentially suitable plant for this hook-on arrangement and indicated that other existing plants on the TVA system might also be suitable. As an alternate to the hook-on arrangement, the provision was made in the proposal to build an entirely new plant on the TVA system, where TVA would provide links from its transmission system to the switchyard at no cost to the project. A site on the Clinch River, which is in the custody of TVA, was named as one possible location which could be made available at no cost to the project.

In arriving at the specific site selection for the LMFBR demonstration plant on the TVA grid, TVA carried out screening studies and detailed site studies. In addition, extensive engineering, environmental and economic studies were made by TVA, CE, AEC and three reactor manufacturers for two hook-on alternative sites (John Sevier and Widows Creek) and a new site on the Clinch River. Other alternate sites that were considered are discussed in Appendix A.

9.2.1 SITE SELECTION CRITERIA

Selection of a site for the LMFBR demonstration plant was based on siting criteria established by considering the joint TVA-CE proposal, the AEC's request for proposals and other applicable requirements. Site selection criteria were established in recognition of the developmental nature of the LMFBR concept and the urgency for getting the demonstration phase under way. The economic benefits to the Nation from the LMFBR have been shown to be strongly time dependent.[3] Therefore, immediate availability of a site for the demonstration plant was highly desirable. In addition, it had been determined that any potential site must not require unusual design features or special licensing considerations and should permit the construction of a plant that would conform in every respect with applicable environmental standards.

An important consideration in selecting the site was to assure that the demonstration plant would not have an adverse effect on TVA's ability to provide an adequate supply of electricity to the region it serves. While there was no basis to assume that the plant would not be a reliable producer of electric energy, it was not considered to be an integral part of TVA's power system capacity. Additionally, because of the scarcity of suitable new sites for commercial nuclear power plants, preference was given to those sites which were not expected to be used in the near future for commercial generating plants.

The criteria used in the search for a suitable site for the demonstration plant are summarized as follows:

1. The demonstration plant size will be in the 300 to 500 MWe range;
2. The site must meet physical and environmental requirements;
3. A hook-on plant is preferable to a new plant provided adequate incentives exist;
4. Concerning the hook-on criteria:
   a. The project should not adversely affect TVA's power system operation or system reliability and should permit the use of existing boilers during periods when the LMFBR NSSS is not available for operation; and
   b. Steam conditions and unit sizes of existing steam plant should closely match requirements of the LMFBR demonstration plant;
5. Concerning new site criteria:
   a. The site should be available immediately; and
   b. The site should be one which is not expected to be used for a commercial generating plant in the near future.

Additional justification of the plant size is contained in Section 1.

9.2.2 SELECTION OF CANDIDATE SITE(S) - HOOK-ON ARRANGEMENTS

In the site selection process for hook-on arrangements, all TVA plants which were expected to be operational on a time schedule consistent with the planned operations of the LMFBR demonstration plant were considered, as shown in Figure 9.2-1. Factors such as plant size, steam condition, seismic region and population centers ruled out a number of sites

without any need for further consideration. Table 9.2-1 lists the plants and summarizes the important factors used in judging the suitability of these sites. Based on the size requirement, the plants which had turbogenerator units judged to be acceptable were: Colbert 1-4, Gallatin 1-4, John Sevier, Johnsonville, Kingston, Shawnee, Allen and Widows Creek 1-6.

The Widows Creek 1-4 units are nonreheat; units 5 and 6 use reheat. The combined capacity of reheat units 5 and 6 is less than the 300 MWe minimum demonstration plant size. Since it would introduce unnecessary complications in the plant design to mix reheat and nonreheat unit types, only units 1-4 were considered at Widows Creek.

The extreme western end of the TVA system is in close proximity to an area in which major seismic activity has occurred as recently as the early 1800's. TVA had submitted a report, "Relationship of Earthquakes and Geology in West Tennessee and Adjacent Area,"[4] to AEC's Director of Regulation for consideration in determining the extent to which nuclear plants can be located in the western end of the TVA system. Since a determination by AEC had not yet been made, the Allen, Shawnee and Johnsonville Steam Plant locations were eliminated from further consideration. On November 13, 1973, the ACRS reported favorably on this matter. However, as noted herein, it was concluded that advantages of an entirely new plant would off-set the potential cost savings of a hook-on plant.

The remaining candidate sites are located in tectonic provinces where sufficient studies have been made to assure that nuclear plants can be adequately designed without sustaining major cost penalties.

The remaining candidate hook-on plants were examined from the standpoint of the importance of these units to the TVA power system. While each unit's generating capacity contributes directly to TVA's ability to serve present and future loads, the capacity factor is a measure of the importance of the unit from the standpoint of power system economics and other

requirements. The capacity factors of these units for fiscal years 1970-71 (July 1, 1969 to June 30, 1971) were as follows:

Units	FY 1970 and 1971 Capacity Factor
Gallatin 1-4	63.6
Colbert 1-4	63.2
Kingston 1-9	61.2
John Sevier 1-4	54.8
Widows Creek 1-4	50.8

As indicated, the Gallatin, Colbert and Kingston units are utilized at a relatively higher capacity factor on the TVA system. Similar utilization patterns were expected in the future. TVA believed it to be prudent to exclude these plants from further consideration as hook-on candidates provided the Widows Creek or John Sevier units are otherwise suitable for the demonstration plant.

At John Sevier, units 3 and 4 were selected as best fitting the needs of the demonstration plant since adequate space is available immediately adjacent to these units to accommodate the LMFBR Nuclear Steam Supply System (NSSS). These units have normal steam conditions of 1,800 psig at 1,050 degrees F with 1,050 degrees F reheated steam. For the demonstration plant, the initial steam temperature and reheat steam temperature would hereto be reduced to about 900 degrees F. This would result in a capacity loss of about 36 MW and the net electrical output of the demonstration plant would be about 346 MW. Consideration of John Sevier as a site for a hook-on plant requires that reheat steam to the turbine be provided.

Units 1 to 3 were selected as the best Widows Creek units for a hook-on plant. Normal steam condition for these units is 1,450 psig

at 1,000 degrees F. Reducing steam temperature to 900 degrees F to accommodate the demonstration plant would result in a loss in net electrical output of about 27 MW, resulting in a demonstration plant net electrical output of about 342 MW.

9.2.3 TECHNICAL EVALUATIONS OF ALTERNATIVE HOOK-ON ARRANGEMENTS

Studies to evaluate the feasibility, economics and hook-on plant requirements were carried out under the direction of a technical committee which included the TVA, Commonwealth Edison, Atomic Energy Commission and the AEC's Project Definition Phase contractors, General Electric, Westinghouse and Atomics International along with their respective Architect-Engineering subcontractors, C. F. Braun, R. M. Parsons and Bechtel. This committee reviewed demonstration plant hook-on considerations at TVA's John Sevier and Widows Creek steam plants. The study concluded "there is no known physical or engineering reason why locating an LMFBR at either John Sevier or Widows Creek to use existing power-producing equipment is not feasible."[1]

9.2.3.1 REHEAT SELECTION ALTERNATIVE FOR JOHN SEVIER

Because John Sevier was one of the prime candidates for the site and because it requires reheat steam to the turbine, an extensive study was carried out on the means of supplying the reheat steam.[5] These were use of the existing coal-fired boilers for reheat, modification of the turbines to nonreheat, steam reheat, separate oil-fired reheaters and sodium reheat. The first two methods were considered to be impractical. Steam reheat might be possible but would pose some difficult design problems. From an engineering standpoint, the most promising alternatives appeared to be separate oil-fired reheaters or sodium reheat.

While sodium reheat is technically feasible and does improve the plant heat rate, there are many technical problems and additional development

costs associated with the use of sodium reheat on the first demonstration plant. By increasing the number of sodium and steam components and control requirements, the potential for operating limitations and reduced plant availability would be introduced. Furthermore, the development and testing of sodium reheat technology on a high technical assurance and reliability basis would not be practical on a schedule compatible with the demonstration plant design.

A sodium reheat task force was formed to conduct a study on the use of sodium reheat. The task force consisted of representatives from the AEC, TVA, Commonwealth Edison, PMC, GE, Westinghouse, AI, ANL and the Liquid Metal Engineering Center. The task force prepared a preliminary draft report in March of 1972[6] and studied the status of sodium reheat development in Europe in June 1972. Their report, "Status of LMFBR Reheat in Western Europe--1972,"[7] along with United States' studies indicated that no clear technical and economic advantages for sodium reheat could be shown at this stage of LMFBR development. Therefore, it was not thought in the best interest of the project to include sodium reheat in the first demonstration plant and only separate oil-fired reheaters were considered for the hook-on at John Sevier. However, the future use of sodium reheat on large-scale commercial LMFBR's has not been precluded and present planning on long-range use of sodium reheat is continuing.

9.2.3.2 COMBINED CYCLE POWER PLANT

The possibility of building an oil-fired, combined cycle power plant which could accommodate an LMFBR NSSS hook-on was also considered as one of the alternatives for the demonstration plant. TVA's Office of Engineering Design and Construction performed a preliminary engineering and feasibility study of such an arrangement for the Clinch River site.[8] A wide range of combinations of conventional components is possible in such an arrangement. The arrangement selected for study consisted of 12 gas turbines with a combined base-load rating of 615 MW, which exhausted

into heat-recovery boilers, using supplemental oil firing, to provide steam to three steam turbine generators with a combined base rating of 435 MW. The 1,050-MW combined cycle plant would have a net plant heat rate of about 8,300 Btu/kWh at steam conditions of 1,250 psig and 950 degrees F. With a steam temperature of 900 degrees F, the steam turbine plant could accommodate an LMFBR NSSS and have a net electrical output in the range of about 400 to 450 MW. The incremental cost of modifying the plant to accommodate the NSSS was estimated to be about 16 million dollars. This study and independent studies by General Electric and Westinghouse indicated that this type of arrangement is feasible and would not represent a significant compromise in the design of the NSSS for the demonstration plant.

TVA performed system expansion studies of alternative capacity additions to the TVA system within the time frame to accommodate the demonstration plant schedule to see if the combined cycle plant could be economically justified as a part of TVA's power program. The analysis indicated that such a plant could not be economically justified on TVA's system by a margin of about 75 million dollars.[9]

9.2.4 SELECTION OF CANDIDATE SITE(S) - NEW

Without regard to the possession and commercial plant use criteria, TVA conducted a survey of potential new sites for the LMFBR demonstration plant and identified eleven potential sites. These sites were under various stages of investigation by TVA. Eleven sites, considered in a survey, and some of the major characteristics of each site are listed in Table 9.2-2. It was concluded from this study that a comparison of site features and environmental factors showed no apparent overall advantage of these sites over the Clinch River site. Since there were no known physical, engineering or environmental reasons that would preclude consideration of a new plant at the Clinch River site and, because only it satisfied the new site selection criteria, it was decided that the

Clinch River site would be considered as a potential site for an entirely new plant as an alternate to the two hook-on sites previously discussed.

9.2.5 CANDIDATE SITES STUDIES

Each of the three principal candidate sites, John Sevier, Widows Creek and Clinch River, are discussed in the following subsections in terms of site location, access, population, geology, seismology, hydrology, flood features, meteorology, land and land use, ecology, public water supplies and historic sites.[9] Major points of comparison of the above site-sensitive factors among the three sites are summarized in Table 9.2-3. Based upon a preliminary analysis, each site represents a feasible location to build the plant.

9.2.5.1 JOHN SEVIER

9.2.5.1.1 SITE LOCATION

The John Sevier site,[10] which occupies 717 acres, is located in Hawkins County, Tennessee, on the south bank of Cherokee Reservoir approximately three miles southeast of Rogersville, Tennessee, as shown in Figure 9.2-2.

9.2.5.1.2 ACCESS

The John Sevier site already has both road and railroad access and only short additions or spurs would be needed to extend these to the NSSS. Barge transportation is not available and the site is approximately 60 miles from the Tri-Cities Airport.

9.2.5.1.3 POPULATION

The area within a 50-mile radius of the John Sevier site includes portions of northeast Tennessee, northwest North Carolina, southwest Virginia

and southeast Kentucky. The population within this area was estimated to be 694,295 in 1970. This represents an increase of 1.9 percent over the 1960 population as compared with a gain of 13 percent for the Nation. The average population density within 50 miles of the site is 88.5 people per square mile. The distance from the plant to the nearest continuously occupied domestic structure is 3,400 feet. Resident population is sparsely settled throughout the area within 10 miles of the site except at the town of Rogersville, located three miles northwest of the plant. The population of Rogersville in 1970 was 4,076 and is projected to be 7,000 by the year 1980 and 1,3000 by the year 2010. The population within 10 miles of the site was estimated from 1970 census statistics to be 18,955 and is projected to be 21,760 by the year 1980 and 27,560 by the year 2010. There are only 725 people within two miles of the site.

The nearest population center as defined in 10 CFR Part 100 is Kingsport, Tennessee, approximately 25 miles away with a population of 61,487 according to the 1970 census.

9.2.5.1.4 GEOLOGY

The initial geologic investigations at John Sevier were conducted in 1952.[11] In March 1972, four additional holes were drilled in the proposed area where the demonstration plant would be located. A relatively even bedrock surface is overlain by approximately 40 feet of fill and terrace material at the site. Experience during prior construction indicates that approximately three feet of slightly weathered rock would have to be removed from the rock surface to obtain sound, unweathered material suitable for foundation of the structures. Additional studies and investigations are required before a detailed geologic evaluation could be made. However, it was anticipated that adequate foundations could be designed.

9.2.5.1.5 SEISMOLOGY

Because of the very similar seismological characteristics of the three candidate sites, all three will be treated here to avoid repetition. The seismic history of the southeastern United States suggests that the earthquake hazard is negligible at the John Sevier, Widows Creek and Clinch River sites. There are no active faults in the vicinity of the sites and there is no physical evidence of any recent seismic activity at any of the sites. The maximum seismic intensity to have been felt at any of the sites in the recorded history of the area is of moderate intensity. The nearest known epicenters of damaging earthquakes at each of the sites were 45 miles southwest of the John Sevier site, 60 miles south of the Widows Creek site and 45 miles northeast of the Clinch River site.

There is no known correlation between earthquakes observed in the region and any superficial tectonic structures. The sites lie in the southern Appalachian tectonic province as defined in TVA's "Sequoyah Nuclear Plant Final Safety Analysis Report."

There are two known major faults in close proximity to the Clinch River site. There is no evidence that these or any other known faults in the region are still potentially active. In the vicinity of all these sites, there is no physiographic evidence, such as stream offsets, displacement of Plio-Pleistocene terrace deposits or displacement of alluvial deposits, to indicate current or geologically recent movement along any of these faults. Therefore, faults in the region are considered to be inactive and detailed faulting investigation is not required.

9.2.5.1.6 HYDROLOGY

The Cherokee Reservoir is a large storage impoundment on the Holston River covering an area of 30,300 acres extending from the Cherokee Dam

to the John Sevier plant. A concrete spillway dam at the plant site creates a water supply impoundment for the plant. This impoundment has a nearly constant surface elevation of 1,080 feet and a volume of 5,500 acre-feet. Condenser cooling water flowrate of 1,012 cubic feet per second (cfs) is withdrawn from the storage impoundment, increased in temperature 15 degrees F and discharged to the Cherokee Reservoir. When operating at full load, the four existing John Sevier generating units reject a total of 3.5 billion Btu per hour to Cherokee Reservoir. As a hook-on plant, the total level of heat rejection at the John Sevier site would be essentially unchanged from the present loads.

Since 1955, TVA has been observing the distribution of heated waters discharged from TVA's power plants, including John Sevier. Studies have not identified any environmental damage resulting from the heat rejection at John Sevier.

The nearest stream gage to the John Sevier site is located at Surgoinsville, Tennessee. This gage has been in operation since 1941. Based on information gathered at this station and gaging stations at Big and Beech Creeks, the average discharge at the John Sevier site is 3,680 cfs. The minimum flow has occurred at those time periods when there has been no flow over the plant water supply dam.

9.2.5.1.7 FLOOD FEATURES

The Holston River watershed, at the John Sevier site, has an area of 3,007 square miles and includes four major dams: Watauga, South Holston, Boone and Ft. Patrick Henry. The estimated maximum possible flood level elevation, based on a flood discharge of 520,000 cfs and including wave runup, is 1,125 feet which is 16 feet above the existing site grade elevation of 1,109 feet.

A feasible method of flood protection at John Sevier is the use of an elevated fill to avoid the potential of water reaching Class I structures. The slopes of this filled area would be suitably protected against rushing waters and floating debris. This method of protection would provide plant access above the computed flood elevation.

9.2.5.1.8 METEOROLOGY

The John Sevier site is located in a well-defined valley in the foothill region of the Appalachian Mountains. The low-level wind at John Sevier tends to be slightly higher than at either Widows Creek or Clinch River. This would result in an augmenting area-wide upvalley and downvalley wind regime which would likely strengthen the local wind in the plant site area. The preliminary meteorological evaluation of the John Sevier site was made using 1954 data from a TVA station one mile southwest of the power plant. The station included a wind sensor 320 feet aboveground and no temperature gradient measurement. Based on a preliminary assessment of atmospheric dispersion characteristics, the most restrictive condition most likely corresponds to Pasquill Type G condition.

9.2.5.1.9 LAND AND LAND USE

Most development surrounding the John Sevier site is very sparse, with farming and forestry being the major land uses. Rogersville is the only exception to this dispersed development. There is some evidence that a new residential development is imminent about 1.5 miles north-northeast, upstream and across the river. The John Sevier hook-on site is already committed to power plant use; thus, no change in land use of the plant site would be experienced by construction of the demonstration plant.

The site can accommodate an exclusion area radius of over 2,000 feet. Based upon work by the reactor manufacturers during the Project Definition

Phase (PDP) of the demonstration plant program, this exclusion area radius appears to be adequate.

No additional off-site transmission lines would be required with only some tie-in equipment necessary.

9.2.5.1.10 ECOLOGY

The resident aquatic organisms are found in two thermal environments at the John Sevier site. First, in the thermal effluent which moves along the left shoreline and then out to midstream. Second, the water flowing over the dam, which creates a water supply impoundment for the plant, affects the immediate area above the thermal effluent and along the right shore, as well as under the heated water addition. Rooted aquatic macrophytes dominate the river above John Sevier. The Cherokee Reservoir downstream from the plant has an oxygen depletion problem which affects the ecological characteristics downstream.

9.2.5.1.11 PUBLIC WATER SUPPLIES

There are four public water supplies taken from other surface water sources within 20 miles of the John Sevier site. Also, there are 24 public ground water supplies within this same area. There is only one public water supply, Morristown, Tennessee, taken from the Holston River between Cherokee Dam and the confluence of the north and south forks of the Holston River. The intake for this supply is located 31.4 miles downstream from the site and, in conjunction with ground water supplies, serves an estimated population of 37,540 with a daily capacity of 3,460,000 gallons.

9.2.5.1.12 HISTORIC SITES

The Andrew Johnson National Historical Site is located approximately 25 miles from the John Sevier site. No other historical sites listed in the "National Register of Historic Places" or the "State Register of Historic Places" have been identified.

9.2.5.2 WIDOWS CREEK

9.2.5.2.1 SITE LOCATION

The Widows Creek site[12] is located on 809 acres in Jackson County, Alabama, on the west bank of the Guntersville Reservoir between Tennessee River Miles 407 and 408, five miles southwest of Bridgeport, Alabama, as shown in Figure 9.2-3.

9.2.5.2.2 ACCESS

The Widows Creek site already has both road and railroad access and only short additions or spurs would be needed to extend these to the NSSS. However, tie-in may require some rerouting of existing lines. Barge transportation is available via a nine-foot-deep navigable channel which connects with the Inland Waterway System. The airport at Chattanooga is approximately 50 miles away by highway.

9.2.5.2.3 POPULATION

Within a 50-mile radius of the Widows Creek Steam Plant are portions of northeast Alabama, northwest Georgia and southern Tennessee. The population within this area was estimated to be 783,760 in 1970. The area has generally experienced a loss of population over the 1960-70 period with no indication that this trend will change dramatically in the future. The population density within this 50-mile radius is about 100 people

per square mile. Resident population is sparsely scattered throughout the area within 10 miles of the plant with only 360 people within two miles of the site. The nearest community is Stevenson, located 4-1/2 miles west of the plant, with a 1970 population of 2,390. The population within 10 miles of the site based upon 1970 census statistics is 15,105 and is projected to be 16,245 by the year 1980 and 24,985 by the year 2010.

The nearest population center as defined in 10 CFR Part 100 would be Chattanooga, Tennessee, approximately 23 miles away with a population of 223,580.

9.2.5.2.4 GEOLOGY

The initial geologic investigations at Widows Creek were conducted in 1949[13,14,15] in anticipation of constructing a fossil-fired plant. Additional investigations were conducted during the construction of the plant. In March 1972, six additional holes were drilled in proposed areas (three areas were considered) where the demonstration plant might be located. The presence of an ancient shear zone was encountered which would require additional investigation to establish the exact extent of this relatively minor structure. The most important relationship between the shear zone and the character of the foundation is the increase in weathering effects in the rocks surrounding the shear. Depending on the extent of the weathering, some foundation treatment may be required. Also, the presence of a meta-bentonite seam was encountered in one of the six exploratory holes. The significance of the presence of the meta-bentonite seam is that this material, on immersion in water will slake and disintegrate and is a potential zone of weakness that could permit settlement if not under a sufficient rock cover. If there is a significant presence of meta-bentonite, then it would be necessary to excavate to a depth where the overlying rock is sufficiently thick to carry the superimposed

loads without relying on the strength of the meta-bentonite. However, it was anticipated that adequate foundations can be designed for the Widows Creek site.

9.2.5.2.5 SEISMOLOGY

Seismology for the Widows Creek site has been discussed in Section 9.2.5.1.5.

9.2.5.2.6 HYDROLOGY

The Guntersville Dam forms TVA's second largest reservoir by area at a normal pool elevation of 595 feet. At this elevation the reservoir is 75.7 miles long, covering an area of 67,900 acres, with a volume of 1,018,000 acre-feet. At the site the reservoir is about 1,500 feet wide, with cross-sectional depths ranging up to 20 feet at normal pool elevation. When operating at normal full load, the existing Widows Creek plant rejects a total of 8.2 billion Btu per hour to Guntersville Reservoir. A condenser cooling water flowrate of 2,434 cfs is withdrawn, heated 15 degrees F and returned to the reservoir. As a hook-on plant, the total level of heat rejection at the Widows Creek site would be essentially unchanged from the present level.

Since 1955, TVA has been observing the distribution of heated waters discharged from TVA's power plants, including Widows Creek. Studies have not identified any environmental damage resulting from the heat rejection of the Widows Creek Steam Plant.

The nearest stream gage to the plant is at South Pittsburg, Tennessee, at Tennessee River Mile 418.1. This gage was moved to its present location in 1965 from a point 11.7 miles upstream, where it was established in 1930. The average discharge for the 40 years of record (1931 to 1970) is 35,330 cfs. The maximum discharge was 241,000 cfs. The

average water flow at Guntersville Dam for the period 1951 to 1965 is 38,875 cfs. Based on these flows and those at South Pittsburg, the long-term average flow at the site was estimated to be 38,200 cfs.

9.2.5.2.7 FLOOD ELEVATION

The Tennessee River at Widows Creek Steam Plant drains 22,820 square miles. The drainage area at Nickajack Dam is 21,870 square miles. There are 22 major dams in the TVA system upstream from Widows Creek Steam Plant, 10 of which have substantial reserved detention capacity during the flood season and lesser amounts at other times of the year. In addition, there are six major dams owned by the Aluminum Company of America (ALCOA) which often contribute to flood reductions but do not have dependable reserved flood detention capacity. Estimation of the maximum possible flood at Widows Creek is based on the flood analysis made for TVA's Browns Ferry Nuclear Plant. When translated to Widows Creek with a three-foot wave runup, the estimated maximum possible flood elevation is 649 feet, which is about 24 feet above the nominal site grade elevation of 625 feet. The use of dikes or elevated land fill could be used to provide flood protection.

9.2.5.2.8 METEOROLOGY

The Widows Creek plant lies in a slightly more pronounced valley than the other two sites. The area experiences upvalley and downvalley wind and stability regimes similar to the other two sites. The pronounced valley produces a slightly lower average wind speed and a higher relative frequency of stable low wind speed conditions, with less favorable meteorological dispersion characteristics in comparison with the other two sites. The preliminary meteorological evaluation of the Widows Creek site was made using 1967-70 data from a TVA station 3.8 miles north-northeast of the plant. The wind sensor is located 44 feet

aboveground with no temperature gradient measurement. Based on a preliminary assessment of atmospheric dispersion characteristics, the most restrictive condition most likely correspond to Pasquill Type G conditions.

9.2.5.2.9 LAND AND LAND USE

The area within a 50-mile radius of the Widows Creek plant is used primarily for agriculture and forest. Forest is the predominant land use within 10 miles of the plant. The exception is the Sequatchie Valley extension, which contains three small communities, the steam plant and agricultural activities. Some of the land near the site has been identified for potential industrial use. The Widows Creek hook-on site is already committed to power plant use. Therefore, no change in land use of the plant site would be experienced by construction of the demonstration plant.

The site can accommodate an exclusion area radius of over 2,000 feet. Based upon work by the reactor manufacturers during the Project Definition Phase (PDP) of the LMFBR demonstration plant program, this exclusion area radius appears to be adequate.

No additional off-site transmission lines would be required with only some tie-in equipment necessary.

9.2.5.2.10 ECOLOGY

At one time, the Guntersville Reservoir near Widows Creek was a commercial source of mussels. However, in the three-year period from 1969 through 1971, only a few mussels have been harvested by commercial mussel fishermen from Guntersville Reservoir. Biological samples collected in 1967 below the plant consisted of bryozoans, limpets (Ferrissia) and Asiatic clams (Corbicula). Further downstream a diversity of bryozoans, caddis flies, limpets and Asiatic clams were found. Upstream from the

plant flatworms (Dugesia), sponges, oligochaetes, bryozoans, limpets and Asiatic clams were found. Hexagenia, Chronomidae, Heleidae, oligochaetes and fingernail clams (Sphaeriidae) were common on the nearly uniform bottom substrate in Widows Creek embayment.

9.2.5.2.11 PUBLIC WATER SUPPLIES

There are nine public water supplies taken from Guntersville Reservoir and its tributary embayments downstream from the Widows Creek site. The nearest downstream surface water supply is the Scottsboro, Alabama, water supply. Its intake is located 21.7 river miles downstream of the plant. The Scottsboro supply serves an estimated 10,000 persons and has an average daily water use of 1,190,000 gallons. There are 20 public ground water supplies within a 20-mile radius of the site.

9.2.5.2.12 HISTORIC SITES

Russell Cave national monument is located about 15 miles from the Widows Creek site. No other historical sites listed in the "National Register of Historic Places" or the "State Registry of Historic Places" have been identified.

9.2.5.3 CLINCH RIVER

9.2.5.3.1 SITE LOCATION

The Clinch River site[16] is on a peninsula located in Roane County, Tennessee, on the north bank of Watts Bar Lake between Clinch River Miles (CRM) 15 and 18 as shown in Figure 9.2-4. The site borders the U. S. Atomic Energy Commission's Oak Ridge Reservation and consists of a portion of a 1,364-acre tract.

9.2.5.3.2 ACCESSIBILITY

Access to the Clinch River plant location would necessitate improving or building about two miles of road. Railroad access is not presently available on the site but can be provided by a spur of approximately two miles in length. Barge transportation could be made available to the site. The nearest commercial airport is the Knoxville airport, about 40 miles away.

9.2.5.3.3 POPULATION

Virtually all the area within 50 miles of the Clinch River site is within Tennessee. Only a small portion of North Carolina and a very small portion of Kentucky are included. The population within this 50-mile radius was estimated to be 678,800 in 1970. This was an increase of only 5.9 percent over 1960 as compared with an increase of 13 percent for the Nation. The population density within a 50-mile radius of the site was 86.5 people per square mile. Within 10 miles of the Clinch River site are the municipalities of Kingston, Lenoir City, Harriman and Oak Ridge. Kingston with a 1970 population of 4,142 is nearest and about seven miles west of the site. The population within 10 miles of the site was estimated from the 1970 census statistics to be 41,895 and is projected to be 46,570 by the year 1980 and 52,145 by the year 1990.

Within five miles of the site there are no significant concentrations of population. Approximately one-third of the area is in either AEC or TVA custody. The land in AEC and TVA custody (including the site) is within the city limits of Oak Ridge. Oak Ridge is the nearest population center as defined in 10 CFR Part 100. Using the present AEC boundary as the limit of residential development of the city, such development could come within about five miles of the plant. Nevertheless, at least two-thirds of Oak Ridge's 28,319 resident population in 1970 were located beyond the 10-mile radius.

9.2.5.3.4 GEOLOGY

In February and March of 1972, four core drill holes were drilled and logged on the Clinch River site. This preliminary work shows that foundation conditions are varied throughout the site area and are basically the same type of foundation conditions that exist at the TVA Bull Run Steam Plant. Although it is not possible on the basis of only four exploratory holes to evaluate the specific foundation conditions that could be encountered at this site, certain analogies can be drawn from the experience at the Bull Run Steam Plant. Extensive excavation to get below weathered rock or specialized foundation treatment for individual column loads could be required, as at Bull Run. Although more geological investigations would be needed at this site, it was anticipated that adequate foundations can be designed.

9.2.5.3.5 SEISMOLOGY

Seismology for the Clinch River site has been discussed in Section 9.2.5.1.5.

9.2.5.3.6 HYDROLOGY

Watts Bar Dam on the Tennessee River at TRM 529.9 is located 55 river miles downstream from the Clinch River site. In the vicinity of the site the reservoir ranges in width from about 300 feet to 600 feet with depths between 22 and 24 feet at the Watts Bar normal full-pool elevation of 741 feet. Based upon stream gage measurements by the U. S. Geological Survey at three locations near the site area, the average discharge is estimated to be 4,600 cfs. The Melton Hill Dam, located about five miles upstream of the site, was closed in May 1963. Since the closure of the dam, there has been an average of 50 days per year during which there were no releases from the dam, resulting in practically zero flow at the Clinch River site. The drainage area between Melton Hill Dam and the

plant site is 25 square miles. The longest period with no release from the dam occurred in February and March 1966 when there was no flow below the dam for 29 consecutive days. These conditions resulted from special reservoir operations in an effort to reduce the growth of Eurasian water milfoil in the reservoir.[17] Such extended periods of zero flow from Melton Hill Dam are not anticipated in the future. During days when there are no releases from Melton Hill Dam, upstream flow at the site is possible, depending upon the operation of Watts Bar and Fort Loudoun Reservoirs.

Use of the Clinch River site would require the installation of supplemental cooling facilities. Makeup water requirements from the reservoir for cooling towers are expected to be approximately 14 cfs with discharges from the cooling facilities to the reservoir of about 7 cfs. Adequate treatment of this limited amount of water can be provided to meet applicable Federal and state water quality standards. State water quality standards are in Section 2.5.

9.2.5.3.7 FLOOD ELEVATION

The maximum flood levels expected at the Clinch River site were determined using preliminary estimates. The maximum possible hydraulic conditions without dam failure could cause the river to reach an elevation of 785 feet. Nonconcurrent seismic failure of Norris Dam could result in an estimated flood elevation of 800 feet at the Clinch River site. The possible contribution from the potential failure of Melton Hill Dam which is located between Norris Dam and the site was not taken into account due to its relatively small size compared to Norris Dam. AEC recommended procedures for considering concurrent flooding and seismic failure of Norris Dam give an estimated elevation of 810 feet.

The Clinch River site plant grade was expected to be at an elevation of approximately 810 feet. Due to the topography at this site, the plant

elevation can be increased by minor relocation if required. Consequently adequate flood protection could be provided without making special provisions at this site.

9.2.5.3.8 METEOROLOGY

The Clinch River site is located in a well-defined valley with an upvalley and downvalley wind stability regime similar to John Sevier and Widows Creek. The physiological features of the site are very much like the John Sevier site, both having less pronounced features than the Widows Creek site. The preliminary evaluation of meteorology at the Clinch River site was based primarily on 1963-68 data from Oak Ridge area Station X-10, located 4.5 miles northeast of the plant site. The station includes wind sensors 140 feet aboveground and temperature sensors 5 and 140 feet aboveground.

Based on a preliminary assessment of atmospheric dispersion characteristics, the most restrictive condition corresponds to Pasquill Type G condition.

9.2.5.3.9 LAND AND LAND USE

The area within a 50-mile radius of the Clinch River plant site is mostly rural and used mainly for agriculture and forest except for the urban areas of Knoxville, Oak Ridge, Maryville-Alcoa and Athens. Within five miles of the site, there are two major industrial activities. These are the Oak Ridge Gaseous Diffusion Plant and the Oak Ridge National Laboratory. In addition, three small industrial operations will be commencing operation in the near future between Chestnut Ridge and the road which forms the northern boundary of the tract. These plants are expected to have from 6 to 25 employees. The AEC's Y-12 Plant is located approximately nine miles from the site and TVA's Kingston Steam Plant is 7-1/2 miles west of the site. While location of the plant at the Clinch River site will commit the land to power plant use, the land is already

committed to industrial development. The site can accommodate an exclusion area radius of over 2,000 feet. Based upon work by the reactor manufacturers during the Project Definition Phase (PDP) of the LMFBR Demonstration Plant Program, this exclusion area radius appears to be adequate.

No additional off-site transmission lines would be required, but a tie-in to an existing 161-kV line and a switchyard will be needed. Further study after the site was selected has shown that some off-site transmission lines will be required; see Section 3.9.

9.2.5.3.10 ECOLOGY

Benthic data near the Clinch River site were available from ORNL investigations conducted in the early and mid-1960's and from TVA studies in the 1960's. The Clinch River is not greatly enriched with organic matter. An estimate of productivity in the river is 10 $g/m^2/yr$ in terms of midge adults. The addition of heat to the river at the site should not have a significant effect on presumably limited biota.

9.2.5.3.11 PUBLIC WATER SUPPLIES

There are ten public surface water supplies within a 20-mile radius of the Clinch River site. Three of these water supplies are located where they would be influenced by the plant's water discharges. There are also 17 public water supplies withdrawing water from wells and springs within a 20-mile radius of the plant site.

The city of Rockwood, Tennessee, has an auxiliary public water supply intake located on the King Creek embayment of Watts Bar Reservoir where the potential for reverse flow exists. Under certain conditions, Clinch River waters could flow upstream in the Emory River.

There are 16 industrial water supplies within a 20-mile radius of the site of which five are located where they would be influenced by the plant's discharges. The closest of these is an AEC water intake located 1.6 miles downstream from the site at CRM 14.4. This supply has an average daily use of 2.5 million gallons. The second is an AEC supply at CRM 11.5 and the third is TVA's Kingston Steam Plant. A. B. Long Quarries, Incorporated and Mead Corporation are both located on the Emory River arm of Watts Bar Reservoir and could receive upstream flows from the Clinch River, but neither of these supplies is used for potable or sanitary purposes.

9.2.5.3.12 HISTORIC SITES

The Museum of Atomic Energy and the ORNL Graphite Reactor are within 10 miles of the Clinch River site. No other historical sites listed in the "National Register of Historic Places" or the "State Registry of Historic Places" have been identified.

9.2.6 ECONOMIC COMPARISON

9.2.6.1 BASIS OF COMPARISON

In this subsection, the differential costs of the three alternatives are compared. Using a new plant at the Clinch River site as the base case, the hook-ons at John Sevier and Widows Creek are examined for cost savings and penalties. The costs are presented in 1972 dollars. A re-examination of these costs is described at the end of subsection 9.2.6.2.

The economic comparison is based on: (1) the use of two reheat units at John Sevier; (2) the use of three non-reheat units at Widows Creek; and (3) the Clinch River site adjacent to the AEC's Oak Ridge Reservation for

a new plant site.[9] Principal plant parameters utilized in this comparison are briefly summarized in Table 9.2-4. Plant cost information is based on the following three sources:

1. A draft report entitled "LMFBR Hook-On Considerations at John Sevier and Widows Creek," dated April 1, 1972.[18]

2. Proposals received by the Project Management Corporation (PMC) on April 21, 1972, from General Electric, Westinghouse and Atomics International to design and furnish the nuclear steam supply system for the LMFBR demonstration plant. The PMC request for proposals specified two alternatives. One was an 810-MW thermal NSSS at John Sevier with separate oil-fired reheaters. The other was a 950-MW thermal NSSI at Widows Creek.[19,20,21]

3. A preliminary cost estimate by TVA for the balance of a new plant at the Clinch River site assuming that the NSSS specified for the Widows Creek site would be used at the new site.

The reference turbine plant design for an entirely new demonstration plant at the Clinch River site is based on an adaptation of a design proposed by Westinghouse after a study of various alternatives. The reference design utilizes a turbine with throttle conditions of 2,400 psig and 900 degrees F in conjunction with moisture separation and steam reheat with six stages of feedwater heating. The proposed 3,600-RPM tandem compound machine would have three casings and a four-flow exhaust end with 25-inch last stage blading. The demonstration plant net heat rate for the above conditions is estimated to be about 8,950 Btu per kilowatt hour corresponding to a net thermal efficiency of 38 percent. With a 950-MW thermal NSSS, the net electrical output would be 361 MW. The use of this configuration for the turbine plant did not provide an optimized arrangement. However, it did provide a reasonable basis for comparison.

9.2.6.2 COST COMPARISON

The cost comparison made in terms of 1972 dollars is summarized in Table 9.2-5. Normal overheads and appropriate contingencies for each cost component were included; however, interest during construction is not included.

The estimates indicate a potential savings of about $42 and $38 million in plant first costs for Widows Creek and John Sevier, respectively, over an entirely new demonstration plant at the Clinch River site. The difference of $4 million in the first cost at John Sevier and Widows Creek is well within the uncertainties associated with these estimates. An extensive detailed engineering study would be required to reduce the uncertainty in the estimates.

Site development cost of approximately $21 million for the new plant at the Clinch River site is shown as a credit for the hook-on sites. Site cost associated with additions and modifications required for the hook-on is much smaller and is included in the hook-on cost. Less than $2 million difference exists for alternative NSSS costs; and, therefore, it is not a major factor in the comparison. The difference is attributed to the difference in plant size.

The cost of a new turbine plant is approximately $46 million (shown as a credit) compared to the hook-on cost at Widows Creek of about $32 million and the hook-on cost including oil reheaters at John Sevier of about $38 million. It was assumed that cooling towers would be used for the new plant at the Clinch River site. The cooling towers together with the new switchyard represent about $7 million in new facilities that were not required at Widows Creek or John Sevier.

Demonstration period operating cost is based on a five-year demonstration period after completion of operational testing of the plant. It was

assumed AEC would provide all nuclear fuel and fuel services for the project during the demonstration period at no cost to the project. The nuclear fuel cost included fuel fabrication but does not include cost of nuclear materials, use charges, spent fuel shipping and reprocessing. The credit of $6 million at John Sevier is due to its smaller nuclear fuel requirements. Fuel oil costs for the oil-fired reheater more than offset the savings from the smaller core. There is no significant difference in the non-fuel operation and maintenance cost, which includes nuclear liability insurance, staff training and plant preoperational testing. Based on this comparison, Widows Creek would be about $1 million lower in cost and John Sevier about $5 million more expensive to operate over the demonstration period than a new plant at the Clinch River site. Taking credit for the value of the output of the demonstration plant, the net operating cost difference would be less than $1 million more for Widows Creek than for a new plant due to Widows Creek's smaller net electric rating and the disadvantage for John Sevier would be about $6.4 million.

The John Sevier plant is located in a higher fuel cost area than Widows Creek. In the past TVA has had difficulty in obtaining an adequate supply of coal at John Sevier and in the future the outlook is not expected to improve. Therefore, location of the LMFBR demonstration plant at John Sevier could partly alleviate the coal supply problem and possibly result in increased revenue to the project from the NSSS output which is not considered in this comparison.

The economic comparison including the effects of 30-percent escalation to the end of the demonstration period, indicates an advantage of about $54 million and $41 million, respectively, for Widows Creek and John Sevier over a new plant. Widows Creek has about a $13 million advantage over John Sevier which is largely attributed to the use of fuel oil for the reheaters at John Sevier.

Because of the changes in the national economy since the cost comparison was made, it was decided to review the results. Changes in the plant cost components should be similar for each of the alternatives. The cost of fuel oil for John Sevier was estimated as $1.00 per million Btu in the 1972 estimate. Based upon current projections, there would be a substantial increase in the cost of fuel for the oil-fired reheaters. These changes indicate the plant capital costs would be about the same and that the operating cost at John Sevier would increase; thus, giving less economic incentive for John Sevier as compared with the 1972 estimate. Within the limits of accuracy in the analysis, these changes would not significantly change the conclusions made in the 1972 study.

The differential costs of the alternative approaches are best estimates and are further subject to relatively large uncertainty. The evaluation of this uncertainty and hence, the detailed application of the results is a major problem in itself. However, in view of the project costs given in Section 8, the cost differentials are felt to be relatively small and do not provide a clear incentive to select any of the three sites based on cost considerations.

9.2.7 OTHER FACTORS CONSIDERED IN COMPARING THE CANDIDATE SITES

In addition to the information provided on the three candidate sites in the description of the sites and the economic evaluation, there were several other important factors considered in selecting the site for the demonstration plant project.

From the standpoint of plant design, the Clinch River site has an advantage since the complete plant would be designed to accommodate the LMFBR. Hook-on plants are constrained in design flexibility since the LMFBR would be constrained to interface with and utilize the existing facilities. The major difference in hook-on design alternatives is that the John Sevier turbines use reheat steam while those at Widows Creek do not.

TVA plans called for installation of an experimental full-scale stack gas scrubbing system on the 550-MW Widows Creek Unit 8 to study removal of sulfur dioxide and particulates from coal-fired plant gaseous effluents. This program could have an impact on demonstration plant construction activities. Together with the demonstration plant, TVA would have almost 1,000 MW of available capacity at this station involved in research and development activities which could have an adverse effect on TVA power system operations.

Costs to TVA which are not reimbursable by the project are an economic factor not included in the cost comparison. For the hook-on plants, additional cost to TVA could result from loss of capacity and replacement energy cost when the units are shut down to tie in the NSSS. No allowance was included in the comparison because it would vary greatly with the circumstances and season of the year in which the shutdown occurs. The cost would be minimal if the outage occurred in an off-peak period and adequate system reserve were available. Under less favorable conditions the cost to TVA could be substantial ($2-3 million) for a three-month outage. (There are not out-of-pocket costs to TVA for the Clinch River site since it is now in TVA custody.) The cost of transmission facilities at the Clinch River site would be approximately $0.8 million.

Another factor unique to this project is the potential value of the demonstration plant at the end of the demonstration period. TVA will perform an evaluation and, if favorable, offer to purchase the demonstration plant at its value to TVA on the TVA system. If TVA does not elect to purchase the plant, it will be at AEC's option and expense to decommission the plant or continue to operate the plant for the AEC. There is very little possibility that a hook-on plant at John Sevier would have any economic value due to the high cost of operating the separate oil-fired reheaters. It is also unlikely that Widows Creek would have very significant economic value. The hook-on plants cannot be assigned a value as capacity since they would not represent an increase in power system capacity. They would actually incur a capacity penalty due to

the loss in capacity which results from off-design steam conditions used for the demonstration plant. An entirely new plant with its own turbo-generator might have sufficient economic value that continued operation could be justified beyond the end of the demonstration period.

Some of the overriding consideratons inherent in the selection of the entirely new CRBRP included the potential technical problems associated with a hook-on arrangement. These included:

1. Plant control considerations which will require continous analog type control functions;
2. There is a possible question to which nuclear standards and quality assurance requirements can be applied to existing hook-on plant equipment; and
3. Mismatch in steam conditions leading to degradation of the turbine performance.

Together these problems were considered to present significant uncertainties in the ability of a hook-on arrangement to meet the objectives of the demonstration plant.

Table 9.2-6 includes some other somewhat intangible considerations which played a part in the overall site selection decision. Though the intangible considerations are difficult to quantify, the results indicate more advantages for the Clinch River site than for the other two sites, with Widows Creek being the least desirable.

9.2.8 SITE SELECTION CONCLUSIONS

An analysis of the site characteristics and environmental factors identified no major problem which would preclude the use of the Widows Creek, John Sevier or Clinch River sites for the LMFBR demonstration plant. In addition, the preliminary studies indicated no significant environmental

differences in the three sites. While there were some physical differences, they are all amenable to design solutions.

The engineering feasibility studies were favorable for the hook-on concept at both the Widows Creek and John Sevier sites and for an entirely new plant concept at the Clinch River site. The added control complexibility associated with the hook-on plant could reduce plant availability. Furthermore, there was uncertainty associated with application of nuclear standards and quality assurance requirements to the turbine plant and associated facilities. Because of the mismatch in steam conditions for the hook-on alternatives, they were substantially less desirable from the standpoint of optimum plant performance. The John Sevier units operate on a reheat cycle, which adds to plant capital and operating costs. Moreover, the planned experimental activities at Widows Creek coupled with LMFBR construction activities could compound station availability problems there.

On balance, the Clinch River site with an entirely new plant would have a significant availability advantage. The preliminary cost comparison for the five-year demonstration period indicated a potential savings on the project cost if the hook-on alternative is selected. However, the advantages are relatively slight and within the uncertainty of the analyses. Thus within a practical matter the sites were considered to be economically equivalent. In addition, an important factor in the relative economics which could be a definite advantage to the new plant concept is the value of the plant at the end of the demonstration period. The new plant at the Clinch River site as opposed to the sites involving the hook-on concept has a better chance of being of value to the TVA power system as a generating source after the initial five-year test period. The continued operation of the demonstration plant after the initial testing period will result in continued output of engineering, maintenance and operational data.

Based on these considerations and the advantages of the new plant concept in offering greater flexibility in NSSS design to meet program objectives and less chance of interruption or adverse effect on the operation of the TVA power system, the Clinch River site was selected as the best overall site of those considered for developing the Nation's first LMFBR demonstration plant.

TABLE 9.2-1

TVA STEAM PLANT CHARACTERISTICS FOR DEMONSTRATION PLANT SITING ADAPTABILITY

Plant	Units	Unit Nameplate Capacity-MWe	Throttle Steam Pressure lb/in^2 gage	Throttle/ Reheat Steam Temp. °F	Meets Size Criteria	Acceptable Seismology	Candidate Site
Allen	3	330.00	2400	1050	Yes	No	
Browns Ferry*	3	1152.00	950	540	No	--	
Bull Run	1	950.00	3500	1000/1000	No	--	
Colbert	1&2	200.00	1800	1050/1050	Yes)	]	]
	2-4	223.25	1800	1050/1050	Yes)	] Yes	] Yes
	5	550.00	2400	1050/1000	No	--	
Cumberland	1&2	1300.00	3500	1000/1000	No	--	
Gallatin	1&2	300.00	2000	1050/1050	Yes)	] Yes	] Yes
	3&4	327.60	2000	1050/1050	Yes)	]	]
John Sevier	1	223.25	1800	1050/1050	Yes)	] Yes	] Yes
	2-4	200.00	1800	1050/1050	Yes)	]	]
Johnsonville	1-4	125.00	1450	1000	Yes)	]	
	5-6	147.00	1450	1000	Yes)	] No	
	7-10	172.80	2000	1050/1000	Yes)	]	
Kingston	1-4	175.00	1800	1000/1000	Yes)	]	]
	5-9	200.00	1800	1050/1050	Yes)	] Yes	] Yes
Paradise	1-2	704.00	2400	1050/1000	No	--	
	3	1150.20	3500	1000/1000	No	--	
Sequoyah*	1-2	1220.58	765	515	No	--	
Shawnee	1-10	175.00	1800	1000/1000	Yes	No	
Watts Bar	1-4	60.00	850	900	No	--	
Watts Bar Nuclear Plant	1-2	1269.90			No	--	
Widows Creek	1-4	140.63	1450	1000	Yes	Yes	Yes
	5-6	140.63	1800	1000/1000	No	--	
	7	575.01	2400	1050/1000	No	--	
	8	550.00	2400	1050/1000	No	--	
X-14 & X-15*	1-2	1332.00			No	--	

*Nuclear Plants

TABLE 9.2-2

SITE DATA FOR CANDIDATE SITES - NEW

NO.	SITE	RIV MI	PLT GR EL	MAX POSS FL EL	COND COOLING	ACCESS FACILITIES HWY	RAIL	BARGE	FDN CONDITIONS	DIST FROM POPULATED AREAS	TRANS LINES 161 KV
1.	TENN RIVER Spring Creek (Wheeler Res)	283L	580	573	Auxiliary Cooling Req'd	7±mi (Ala20)	7±mi (SOU)	Yes	Not investigated	18±mi to Athens Ala (pop 14,000±) 19±mi to Decatur Ala (pop 37,800±)	1-3 mi SW
2.	Murphy Hill (Guntersville Res)	370L	618	618	Auxiliary Cooling Req'd	16±mi (US431)	27±mi (L&N)	Yes	Core drilling indicates top of rock 21 to 61 ft below general site grade	11±mi to Guntersville Ala (pop 6,500±) 15±mi to Scottsboro Ala (pop 9,300±)	1-Just across reservoir. Proposed line and substation 3 mi S
3.	Blythe Ferry (Chickamauga Res)	499L	730	725	Auxiliary Cooling Req'd	0.3±mi Tenn 80	22±mi (SOU)	Yes	Seismic determinations indicate top of rock at favorable depth below plant grade	6±mi to Dayton Tenn. (pop 4,400±)	1-6 mi SE
4.	Caney Creek (Watts Bar Res)	562R	820	775	Auxiliary Cooling Req'd	1.5±mi (US70 & 27)	6±mi (L&N)	Yes	Not investigated	4.5±mi to Rockwood Tenn (pop 5,300±) 5.5 mi to Kingston Tenn (pop 4,200±)	1±mi NW 1-4 mi SE across reservoir

(Continued)

TABLE 9.2-2 (Continued)

NO.	SITE	RIV MI	PLT GR EL	MAX POSS FL EL	COND COOLING	ACCESS FACILITIES HWY	RAIL	BARGE	FDN CONDITIONS	DIST FROM POPULATED AREAS	TRANS LINES 161 KV
5.	CLINCH RIVER Clinch River (Watts Bar Res)	16R	800	785	Auxiliary Cooling Req'd	2±mi (Oak Ridge Turnpike)	2±mi Spur of SOU	Yes	Core drilling indicates lime stone and silt stone underlies site Geologists believe adequate foundation is available	8±mi to Kingston Tenn (pop 4,200±) 10 mi to Oak Ridge Tenn (pop 28,000±)	1-passes through site 1±mi N
6.	FR. BROAD RIVER Taylor Bend (Douglas Res)	64R	1055	1016	Auxiliary Cooling Req'd	2±mi (US 25E)	4±mi (SOU)	No	Currently under investigation	7±mi to Newport Tenn (pop 7,300±) 12±mi to Morristown Tenn (pop 20,300±)	1-6±mi N 2-9±mi N
7.	HOLSTON RIVER Buck Hollow	39L	1050	950	Auxiliary Cooling Req'd	4±mi (US 11E)	4±mi (SOU)	No	Currently under investigation	5±mi to Jefferson City (pop 5,100±)	1-passes through site 1-2±mi S
8.	Lee Valley (Cherokee Res)	88L	1120	1089	Auxiliary Cooling Req'd	2±mi (Tn 66A)	6±mi (SOU)	No	Geologists say site is underlain by limestone and shale	10±mi to Rogersville Tenn (pop 4,000±) 11±mi to Morristown Tenn (pop 20,300±)	3-passes just north of the site

(Continued)

TABLE 9.2-2 (Continued)

NO.	SITE	RIV MI	PLT GR EL	MAX POSS FL EL	COND COOLING	ACCESS FACILITIES HWY	RAIL	BARGE	FDN CONDITIONS	DIST FROM POPULATED AREAS	TRANS LINES 161 KV
9.	Phipps Bend	122R	1195	1152	Auxiliary Cooling Req'd	2±mi (US 11 W)	1.5±mi (SOU)	No	Currently under investigation	11.5±mi to Rogersville Tenn (pop 4,000±) 16±mi to Kingston Tenn (pop 32,000±)	2-9±mi SW
	CUMBERLAND RIVER										
10.	Johntown (Old Hickory Res)	285R	536	514	Auxiliary Cooling Req'd	1±mi (Tn 25)	5.5±mi (L&N)	Yes	Extensive core drilling indicates satisfactory foundation available	8±mi to Harrisville Tenn (pop 2,200±) 18±mi to Carthage Tenn (pop 2,500±)	2-5±mi S
	DUCK RIVER										
11.	Rieves Bend (Proposed Columbia Res)	146L	700	644	Auxiliary Cooling Req'd	3±mi (Tn 50)	4±mi (L&N)	No	Core drilling indicates satisfactory foundation available	5±mi to Columbia Tenn (pop 21,500±)	1-10±mi S

TABLE 9.2-3

A SUMMARY OF COMPARISONS BETWEEN THE JOHN SEVIER, WIDOWS CREEK, AND CLINCH RIVER SITES

	JOHN SEVIER	WIDOWS CREEK	CLINCH RIVER
A. FEASIBILITY CONSIDERATIONS			
Based upon a preliminary analysis, each site represents a feasible location to build the plant.			
Foundation Conditions	Probably the best foundation conditions of the three sites.	Several potential problems have been identified. Adequate foundation could be designed.	Similar to TVA's Bull Run Steam Plant. Adequate foundation could be designed.
Seismology	Seismology is similar for all the sites. No active faults in vicinity of any of the sites and no physical evidence of any recent seismic activity at any of the sites.		
Flooding	Site grade lies below maximum possible flood (MPF) level elevation which would require special flooding protection.	Site grade lies below MPF level elevation which would require special flooding protection.	Plant grade can be established above MPF level elevation. Best site from this standpoint.
Cooling Water	Adequate based on John Sevier Steam Plant operations.	Most acceptable site from standpoint of cooling water availability throughout the year.	Will require supplemental cooling.
Meteorology	Slightly better than Clinch River site.	Least desirable site from standpoint of overall meteorology.	Slightly less favorable than John Sevier site.

(Continued)

TABLE 9.2-3 (Continued)

	JOHN SEVIER	WIDOWS CREEK	CLINCH RIVER
Available Land	All three plant sites can accommodate the facilities and an exclusion area radius of 2,000 feet.		
Access	Highway and rail facilities available. Must tie into facilities at the plant.	Highway, rail and barge facilities available. Tie into facilities may require some rerouting of existing lines plus additional track to the NSSS.	Highway, rail and barge facilities can be added. Two miles of rail track and two miles of improving or building of roads is required.
Transmission Facilities	No additonal off-site transmission lines required with only some tie-in equipment needed.		No additional off-site transmission lines required.* Tie-in to 161-kV line and switchyard needed.
Steam Conditions	Degraded from existing conditions. Considered feasible but will have increased turbine erosion and associated maintenance.	Degraded from existing conditions. Considered feasible but moisture may be more of a problem.	Set by plant design.

(Continued)

TABLE 9.2-4

PRINCIPAL PLANT PARAMETERS FOR THE DEMONSTRATION PLANT ALTERNATIVES

Type	New Plant	Hook-on Non-Reheat	Hook-on Reheat
Site	Clinch River	Widows Creek	John Sevier
Steam Cycle	Steam reheat	Non-reheat	Oil-fired reheat
No. of Turbine-generator Units	1	3	2
Reactor Thermal Rating (MW)	950	950	810
Oil Thermal Input (MW)	-	-	156
Net Electrical Output (MW)	361	342	346
Net Capacity Derating (MW)*	-	27	36

* From normal net full-load capacity when operated on fossil boilers.

TABLE 9.2-5

SUMMARY OF ECONOMIC COMPARISON OF DIFFERENTIAL COSTS OF ALTERNATIVES TO THE CLINCH RIVER BREEDER REACTOR

	Millions of Dollars	
Plant Cost	Widows Creek	John Sevier
Site Development	-20.8	-20.8
Nuclear Plant (NSSI)*	0	- 1.7
Turbine Plant	-46.2	-46.2
Hook-on	+31.9	+37.7
Cooling Facilities	- 4.5	- 4.5
Switchyard	- 2.7	- 2.7
Subtotal (1972 $)	-42.3	-38.2
Five-Year Demonstration Period Operation Costs		
Nuclear Fuel Fabrication**	0	- 6.0
Fuel Oil	0	+12.8
Non-fuel O&M	- 1.2	- 1.9
Subtotal	- 1.2	+ 4.9
Potential Power Credit at 3.5 mils	+ 1.9	+ 1.5
Net Operating Costs (1972 $)	+ 0.7	+ 6.4
Subtotal Differential Cost	-41.6	-31.8
Escalation Allowance at 30%	-12.5	- 9.5
Total Differential Costs (1972 $)	-54.1	-41.3

* Based on nominal preliminary estimates provided by PMC derived largely from proposals submitted to PMC by reactor manufacturers.

** Nuclear fuel fabrication cost does not include the cost of other fuel cycle materials and services that will be provided by AEC; the difference in cost indicated is due to the smaller reactor size at John Sevier.

TABLE 9.2-6

INTANGIBLE CONSIDERATIONS

	John Sevier	Widows Creek	Clinch River
The following considerations cannot be easily quantified but may have some bearing on the decision:			
Apparent public acceptance (as judged from inquiries and responses from public and civic organizations)	Excellent	Questionable	Good to excellent
Ability to accommodate construction force without major impact on community	Poor	Fair	Good
Possible impact on construction forces for other TVA projects	Minimal	Could cause some problems	Minimal
Interference with other announced TVA R&D projects	None	Possible interference with stack gas cleaning program	None
Effect on power supply capability	Possible slight disadvantage	Greatest potential for disruption	Possible slight advantage
Availability of public facilities and convenience as a show place	Fair	Poor	Good
Access to special purpose nuclear facilities and technical capability at AEC facilities	Fair	Poor	Excellent
Convenience to AEC operations offices in Oak Ridge	Fair	Poor	Excellent

TABLE 9.2-6 (Continued)

	John Sevier	Widows Creek	Clinch River
Convenience to TVA Power offices	Poor	Good	Fair
Convenience to TVA Knoxville offices	Fair	Poor	Good
Accommodations for PMC offices	Poor	Poor	Good

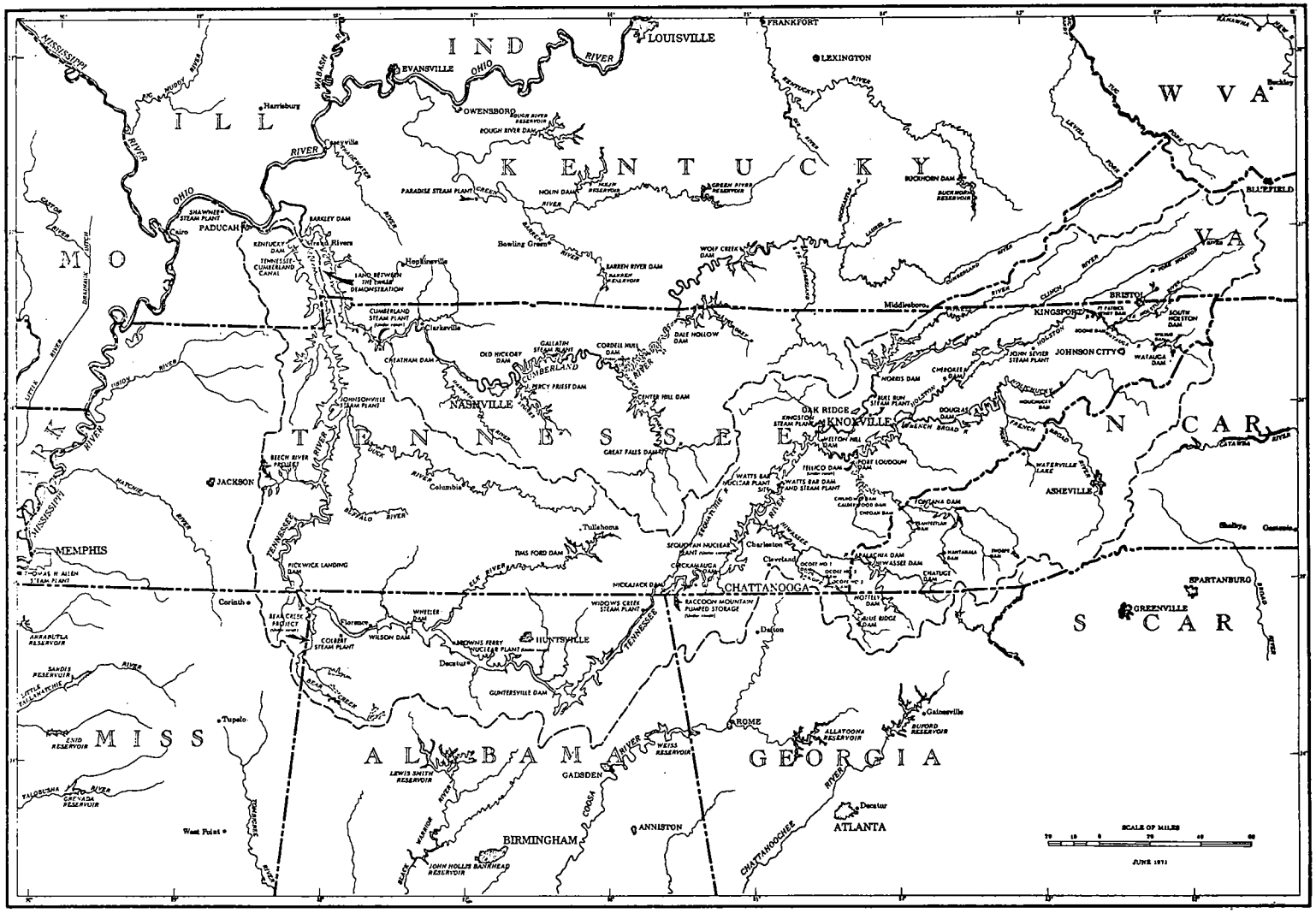

Figure 9.2-1 TVA CANDIDATE PLANTS FOR A HOOK-ON ARRANGEMENT

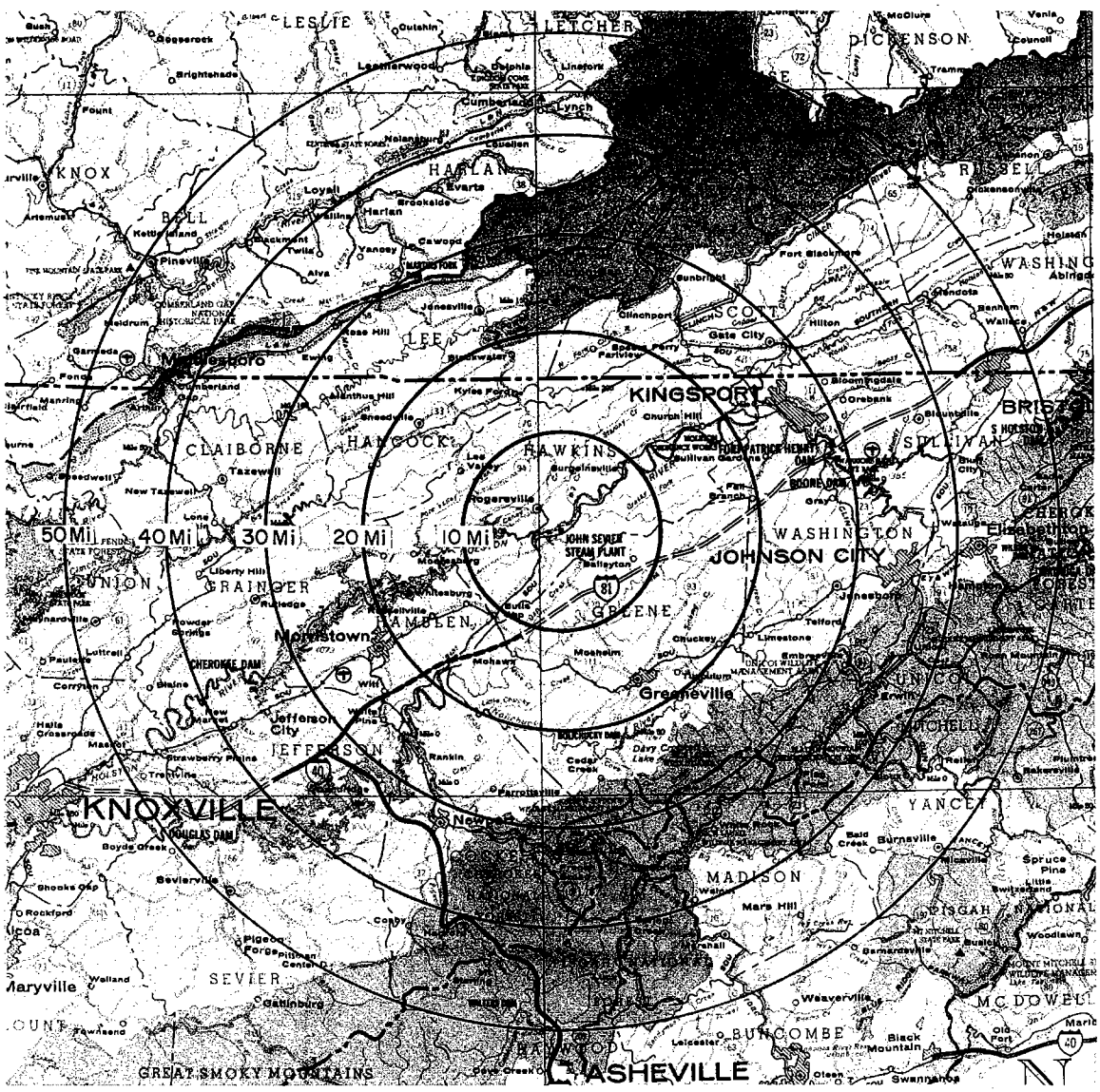

Figure 9.2-2 JOHN SEVIER SITE

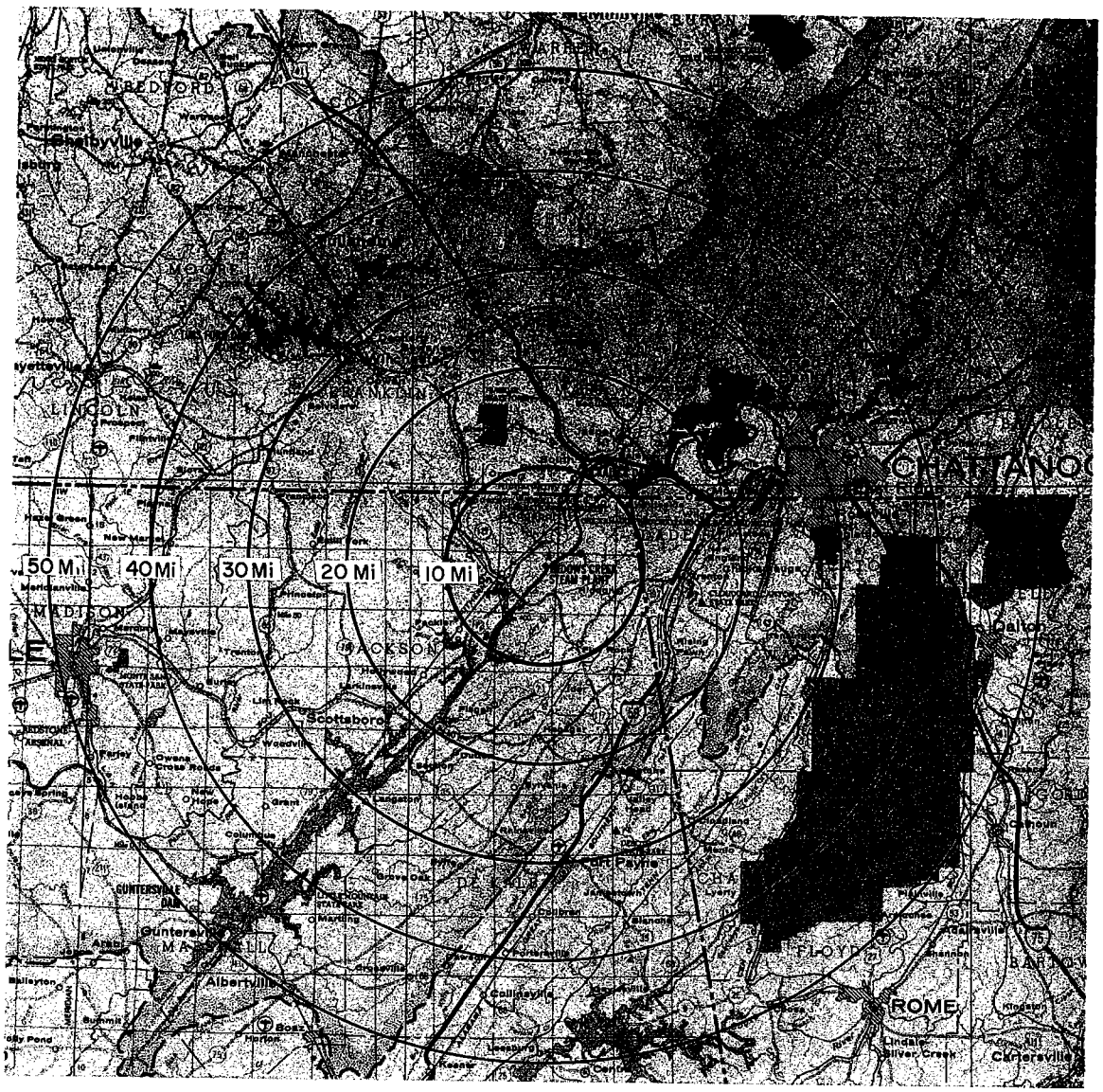

Figure 9.2-3 WIDOWS CREEK SITE

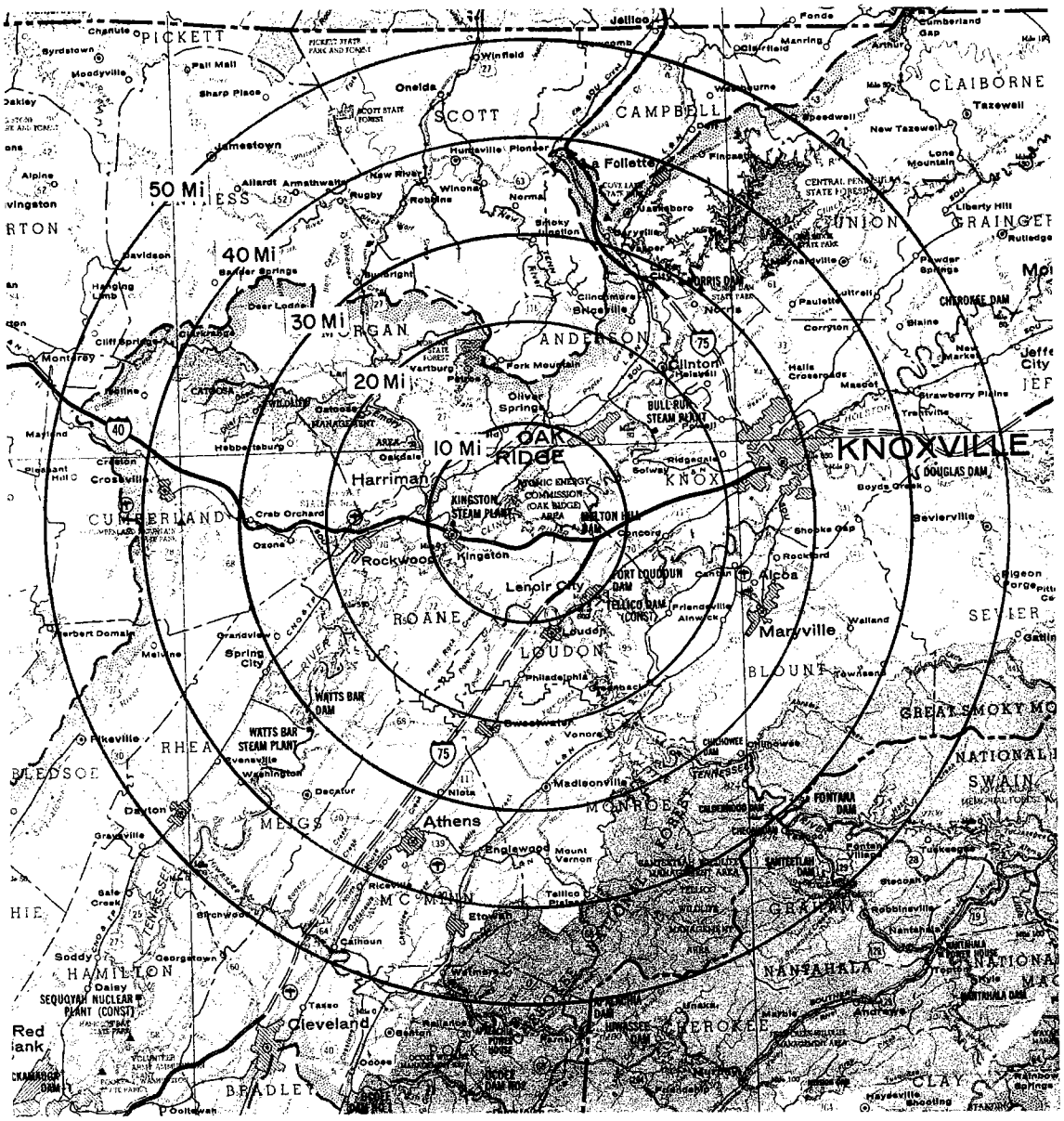

Figure 9.2-4 CLINCH RIVER SITE

10.0 PLANT DESIGN ALTERNATIVES

It must be recognized that any act of man or nature has some impact upon the environment. It is also important to note that although adverse impact can be reduced by the allocation of additional resources for environmental protection, the law of diminishing returns applies to the resources expended. This point was recognized by the U.S. Congress in enacting the National Environmental Policy Act of 1969 and was further reinforced by the U.S. Court of Appeals for the District of Columbia in 1971 in the Calvert Cliffs Decision. A benefit-cost analysis of the proposed project (the cost-effectiveness portion in particular) brings into account the environmental aspects of the proposed project and, therefore, assists in the implementation of both the letter and spirit of the National Environmental Policy Act of 1969.

The benefit-cost analysis of the Clinch River Breeder Reactor Plant requires a discussion of the proposed nuclear power station and a comparison of the proposed station and its feasible alternatives.

The environmental effects of a nuclear power station can be associated with the operation of certain identifiable systems. Thus, a composite analysis should incorporate a combination of these identifiable systems each of which has been selected, through evaluation of environmental, economic and other costs as the optimal choice within its category.

In some instances, the interaction of these systems may be such as to require their selection on the basis of an optimal combination rather than on the basis of individual optimal systems. The weak point in this form of analysis is not the logic but (1) the availability of realistic data on many of the parameters associated with each of the systems and (2) meaningful quantitative estimates on importance of environmental changes and the extent of change assignable to a particular alternative. Although energy requirements, hardware costs and economic considerations are relatively easy to predict, social benefits

and costs, such as the impact upon human health and safety and preservation of the biological ecosystem, are not well defined and are therefore, by necessity, more subjective.

Whenever there is no objective method of determining benefits or costs, or when effects are highly uncertain because of the lack of basic understanding and knowledge they shall, nonetheless, be identified and discussed. All relevant knowledge must be included in attempting to come to a reasonable judgment. Hence, "benefits" and "costs" as used herein are defined on a broad scope. This approach is in agreement with the philosophy of the Calvert Cliffs Decision and U.S.A.E.C. guidelines.

To provide continuity and uniformity to the logic process through which the alternatives study for each plant system is conducted, a single general format for Section 10 is employed. A guide to its structure appears in Table 10.0-1.

TABLE 10.0-1

GENERAL OUTLINE FOR SECTION 10.0

10.X System

Purpose of System
Identification of Selected System
Identification of Alternatives

10.X.1 Description of Alternatives

[All alternatives identified above are described generically.]

10.X.2 Elimination of Impractical Alternatives

[Any alternatives that lack feasibility on the basis of technical, economic, or plant/site-adaptability considerations are identified and the reasons for their elimination given. No further environmental or economic evaluations are performed for these alternatives.]

10.X.3 Specifications for Reasonable Alternatives

[Those alternatives not eliminated in 10.X.2 are identified and their site/plant-specific design and operational characteristics are presented.]

10.X.4 Environmental Costs

[The potential environmental costs are identified and each reasonable alternative evaluated.]

10.X.5 Economic Costs

[The economic costs involved are identified and each reasonable alternative evaluated.]

10.X.6 Comparison of Alternatives

10.X.6.1 Direct Comparison of All Reasonable Alternatives

10.X.6.2 Reasons for Selection of Chosen System

10.1 COOLING SYSTEM

During the operation of any fossil or nuclear-fueled power plant, a large portion of the thermal energy of the steam is not converted into useful mechanical energy and must be removed as waste heat. Dissipation of this excess heat is the function of the cooling system. The environmental significance of heat rejection and the influence of the processes governing it upon the design of other plant systems make the selection of the cooling system one of the most important and comprehensive of the alternative studies.

Potential mechanisms for heat rejection from the CRBRP include open and recirculating systems involving total and partial use of the Clinch River as a heat sink, and evaporative and non-evaporative cooling through the creation of artificial waterbodies and employment of cooling towers. Environmental concerns associated with these approaches include the effects of thermal discharges on Clinch River aquatic life, condensed vapor plume formation, ground fog and ice, drift, energy and water consumption, land use and aesthetics. Selection of a system that reduces the adverse environmental effects to that degree consistent with the results of benefit-cost analysis is the desired goal of the cooling system alternative study.

A mechanical draft wet cooling tower, linear cell array, is the selected cooling system for the CRBRP.

Alternative cooling systems considered for the CRBRP are the following:

1. Once through cooling;
2. Cooling lake;
3. Spray pond;
4. Natural draft wet cooling tower;
5. Mechanical draft wet cooling tower;

6. Mechanical draft dry cooling tower; and

7. Mechanical draft wet/dry cooling tower.

10.1.1 DESCRIPTION OF ALTERNATIVES

10.1.1.1 ONCE THROUGH COOLING

Although current apprehension over the effects of thermal discharges and EPA regulations[1] will severely limit its use, once through cooling remains the simplest, most economic and most effective means of dissipating condenser thermal energy. Once through cooling employs a natural surface water source to provide cooling water on a non-recirculatory basis. Ultimate rejection of the total heat load extracted from the condenser is to this water source. The large quantities of cooling water required necessitate the availability of a surface source of such size and character that sufficient year-round supply and assimilative capacity are assured.

10.1.1.2 COOLING LAKE

When once through use of a natural surface water source is not practical but ample land suitable for impoundment is available, a cooling lake is an attractive alternative. A cooling lake serves as a heat sink and reservoir by providing for the bulk of the dissipation of condenser thermal energy and permitting recirculation of cooling water. In this manner, the cooling lake and plant form a nearly closed water cycle. Interface with a natural water body is needed because blowdown of a portion of the cooling lake water is required to prevent excessive accumulations of chemicals in the lake. This action necessitates withdrawal of makeup water from the natural source as well.

Heat discharged to the cooling lake is ultimately rejected to the atmosphere through the natural processes of convection, evaporation and

radiation. As these energy transfer modes are relatively slow acting in a lentic environment, the size of cooling lakes must be large, on the order of $\geq$ 1 acre per MWe.

Cooling lakes are usually man-made impoundments created by damming existing streams or pumping water into suitable basins. Environmentally, they offer the advantages of reduced impact on the natural water body, multiple use potential such as boating or fishing and aesthetic attractiveness.

10.1.1.3 SPRAY POND

A modification of the cooling lake that may be employed to enhance heat dissipation or reduce land requirements is the spray pond. Spraying atomizes the warm water increasing its effective surface area and the relative velocity between the water and air. The amount of heat dissipated through evaporation is significantly increased producing more rapid cooling and higher water consumption.

In conventional spray ponds, the heated effluent is pumped from the condenser directly through spray nozzles into the pond. A recent innovation utilizes modular spray units mounted on floating platforms. Each modular unit is equipped with a pump for drawing water from beneath the platform. Any number of modules can be employed. This system produces better mixing within the pond and better cooling by continual respraying of the heated effluent.

Current studies indicate that a spray pond requires only about five percent of the land needed for an equivalent cooling lake. Thus, it is an environmentally attractive alternative where land use is limited. However, the use of a spray pond increases the rate of water consumption and the potential for fogging and introduces drift to the cooling lake system.

10.1.1.4 NATURAL DRAFT WET COOLING TOWER

A natural draft cooling tower is designed so that a natural draft is created upward through the tower because of the difference in density of the warmed air inside the tower and the exterior surrounding air. The flow rate is proportional to the density difference and to the tower height. Air drawn through the tower is contacted with the cooling water, which is continually redistributed into fine droplets while falling through the tower packing (fill) to provide a large air-water surface contacting area. Heat is transferred from the water to the air by sensible convective transport and evaporation. Heat transfer occurs as a result of direct contact between the naturally drafted air and the recirculating cooling water; thus, the name -- natural draft wet cooling tower.

Much of the cooling in a wet tower is achieved by the evaporation of a portion of the water. The exit air stream, warmed and saturated with water vapor, leaves the tower and mixes with the atmospheric air. Excess water vapor in this air mixture is condensed, forming a plume. In addition to the water vapor, droplets of water in the exit air stream can be blown out of the tower as drift. Tower height is increased as much as possible to achieve the greatest air flow; typical natural draft cooling tower heights for large commercial plants are as much as 500 feet. Base diameter for these structures are almost equal to the height.

Formation of a condensed vapor plume under certain meteorological conditions is one of the environmental concerns associated with the natural draft wet tower. Typically, the tower height reduces the potential for ground fogging. The high level plume, however, does represent a possible hazard for local air traffic and an aesthetic intrusion. Other environmental concerns for the natural draft tower include salt damage to foliage as a result of drift deposition, water consumption due to the evaporative cooling process and the aesthetic impact of the structure itself.

Because of the massiveness of the structure, the natural draft cooling tower is expensive to construct. However, the operating costs are relatively low because natural forces are used to move the air. The necessity to warm the air to get drafting causes temperatures in the tower to be greater than might otherwise be desirable. Thus, the degree of cooling is reduced and the relative performance of the turbine generator is correspondingly decreased due to back pressure. This introduces a capability (electrical generating capacity) penalty into the cost of the tower.

10.1.1.5 MECHANICAL DRAFT WET COOLING TOWER

Cooling in a mechanical draft wet tower proceeds by the same heat transfer modes described in the previous section on the natural draft wet tower. Air flow, however, is mechanically induced by electrically powered fans. Natural drafting is not required and the massive tower size and attendant structural configuration problems are reduced. Mechanical draft towers can be built in a relatively compact and standardized fashion.

In a manner similar to the natural draft tower, the mechanical draft wet cooling tower consumes large volumes of water, creates a plume and has drifting of water droplets. Because of construction features, the mechanical draft tower is less expensive to purchase initially than the natural draft tower but the power used to drive the fans causes a significant increase in the operational cost. Individual plumes are created for each fan cell and are exhausted at heights of 60 to 80 feet above ground level, creating a potential for localized ground fogging.

10.1.1.6 MECHANICAL DRAFT DRY COOLING TOWER

In areas where water consumption is a critical environmental concern, dry cooling becomes a competitive alternative system. The mechanical

draft dry cooling tower is designed for 100 percent closed cycle cooling with no requirement for makeup from a natural water body.

Dry cooling towers dissipate heat by conduction and convection. Heated cooling water from the plant's condensers is pumped through banks of finned-tube heat exchanger surfaces. Heat in the water is transferred to the metal walls of the tubing, then to air which flows up through the cooling tower, past the tubing and out of the tower. Water and air do not come into direct contact; therefore, water is not lost by evaporation. Because the heat transfer does not include the latent heat of evaporation, dry cooling towers require both greater air flows and larger air temperature increases in order to dissipate the same amount of heat as a comparable evaporative cooling system.

Wet towers rely on an overall enthalpy driving force between water and air to transfer heat between phases; dry towers rely on a temperature driving force between the water inside the tubes and the air flowing outside. Therefore, the dry bulb temperature of the air is the theoretical limit of cooling which can be accomplished by dry towers.

In addition to eliminating water consumption, the dry cooling tower does not produce drift, condensed vapor plumes or thermal discharges. However, the non-utilization of evaporative cooling that results in the above benefits imposes several environmental and economic costs. More cells are required to dissipate the same heat load by dry cooling than are needed for wet cooling. Land use and energy requirements (for fan power) are increased. Dry cooling tower cold water temperatures are considerably higher than those produced by wet towers; therefore, higher capability penalties must be assessed and plant efficiency is reduced.

10.1.1.7 MECHANICAL DRAFT WET/DRY COOLING TOWER

An effective way of reducing cooling tower plume formation and, particularly, the hazards of fogging and icing without resorting to dry cooling is the employment of a standard wet evaporative cooling tower in combination with a dry heat exchanger system. This hybrid design -- the wet/dry cooling tower -- modifies the exhaust air condition by utilizing nonevaporative heat transfer to handle part of the cooling requirement. In this way, supersaturation of the exhaust air stream is prevented and a visible plume is not created.

In the wet/dry tower, finned-tube heat exchangers (dry section) are installed along with the packing (wet section) of a typical wet cooling tower, as shown in Figure 10.1-1. Hot water serves as the tube side heat exchanger. Dry section cooling is inherently less efficient than wet section cooling. When the system is operated totally dry, or at some combination of wet/dry, the overall cold water temperature returned to the plant will be higher than it would be for the totally wet mode operation. It is usually not economical, practical or necessary from a fog control standpoint to design the system for totally dry operation.

Plant operation and fog control requirements make it practical and economical to operate at water temperatures above the level that a totally wet section will produce during cold weather when fog becomes a major concern. Usually a design level combination of wet/dry cooling with a stated maximum system cold water temperature can be selected which will eliminate fog plume problems without raising the cold water temperature above a level that reduces plant operating efficiency.

Current technology favors a combination wet/dry system for controlling plume formation. Flexibility in the wet/dry system allows for efficient evaporative cooling in the warmer months, combined with a variable controlled dry heat exchange section for fog control during cold months.

The quantity of air flow through the wet and dry sections can be controlled by a feedback system which senses cold water temperature. In this manner, cold water temperature can be maintained at an upper limit, while evaporation, and thus fogging, is kept to a minimum.

In addition to its environmental advantage of plume control, the wet/dry tower offers reductions in water consumption and drift rate compared to all-wet cooling. However, winter cold water temperatures are higher due to the utilization of the dry sections resulting in a warmer blowdown and reduced generating capability.

10.1.2 ELIMINATION OF IMPRACTICAL ALTERNATIVES

10.1.2.1 ONCE THROUGH COOLING

The Committee on Power Plant Siting of the National Academy of Engineering has established the following criterion: "Plants sited on large streams and using once-through cooling should not use more than 20% of the low water flow of the stream".[2] Due to the unique hydrology of the Clinch River described in Section 2.5, the low water flow condition is actually one of no flow, as shown in Figure 10.1-2. Under such a condition, the condenser heat load could not be adequately dissipated and the discharge water temperatures would cause significant impact to aquatic life. Once through cooling is not, therefore, a viable alternative for the CRBRP.

10.1.2.2 COOLING LAKE

Use of a cooling lake requires sufficient land suitable for impoundment. Noting that an efficient lake system in regions of moderate humidity must be sized to $\geq$ 1 acre per MWe, a 350 to 400 acre lake would be needed for the CRBRP. Due to the uneven topography of the Site, a lake of this size would be subject to extensive fingering with attendant reduction in heat dissipation capability and probable off-site land loss. Thus, a lake cooling system is not an applicable alternative.

10.1.3 SPECIFICATIONS FOR REASONABLE ALTERNATIVES

10.1.3.1 SPRAY POND

The spray pond cooling system considered for the CRBRP consists of two rectangular channels 80 feet wide and 2,175 feet long and occupies approximately eight acres of land. A floating platform spray system consisting of 54 modular cells is used. Each module is self-contained and includes pump, water intake and four spray nozzles. Design conditions for the spray pond are given in Table 10.1-1.

10.1.3.2 NATURAL DRAFT WET COOLING TOWER

A single natural draft wet cooling tower is required for the CRBRP. Dimensions for this tower are a 310-foot base diameter and a 385-foot height. Range and approach are both 20 degrees F. Design parameters for the natural draft tower are presented in Table 10.1-1. Exhaust conditions are depicted in Figure 10.1-3.

10.1.3.3 MECHANICAL DRAFT WET COOLING TOWER

Two alternative mechanical draft wet cooling towers are identified for the CRBRP. They are the same in all respects except in tower configuration. One design utilizes the standard linear arrangement of tower cells and the other design incorporates the recent innovation of circular cell configuration. Circular design permits a greater plume rise with attendant reductions in ground fog potential and recirculation of the exhausted air stream.

Both mechanical draft towers have a 25 degree F range and 15 degree F approach and utilize 10 cells in a single tower. Exhaust conditions and evaporation rate for these towers are depicted in Figure 10.3-4 and 10.3-5, respectively. The linear tower is 400 feet long, 55 feet wide

and 60 feet high. The circular tower has a 250-foot diameter base and a 60-foot height, as shown in Table 10.1-1.

10.1.3.4 MECHANICAL DRAFT DRY COOLING TOWER

The mechanical draft dry cooling system considered for the CRBRP is a four tower unit utilizing a total of 82 cells. Each circular tower has a base diameter of 245 feet and a height of 78 feet. Required circulating water flow for the dry cooling alternative is nearly twice that of the mechanical draft wet tower, as seen in Table 10.1-1. A Heller cycle dry tower,[3] shown in Figure 10.1-6, is employed. Cold water temperatures and exhaust conditions for the dry tower are depicted in Figures 10.3-7 and 10.3-8, respectively.

10.1.3.5 MECHANICAL DRAFT WET/DRY COOLING TOWER

Two mechanical draft wet/dry towers are considered for the CRBRP; a 30 percent plume severity tower and a zero percent severity tower. Plume severity is defined in Figure 10.1-9 and is used to indicate the design conditions for which no visible plumes are produced. The zero percent severity tower provides the greater level of plume control. Both of the wet/dry towers utilize a circular configuration. Design conditions for the towers are given in Table 10.1-1.

10.1.4 ENVIRONMENTAL COSTS

10.1.4.1 PLUME FORMATION

Environmental concerns relating to the formation of vapor plumes from evaporative cooling towers include ground fog and ice, plume interference with air traffic and aesthetic impact. To predict the magnitude of these potentially adverse effects, a vapor plume study has been performed and is included as an appendix to this section.

10.1.4.1.1 GROUND FOG AND ICE

Occurrences of ground fog and ice are predicted for the five alternative cooling towers in Appendix 10.1. A summarization of the potential total hours per year of ground fog attributable to each of the alternatives is given in Table 10.1-2. Plumes for the natural draft wet tower are sufficiently elevated that interception with the terrain will not occur; hence, no ground fogging is expected. Potential fogging hours are the highest for the mechanical draft wet tower, linear array, and are the lowest for the zero percent plume severity wet/dry tower.

System selection cannot be determined solely by fogging potential as a major consideration relates to the fogging of highways, bridges and water ways. These are areas of concern where the local population may be most severely affected. For the CRBRP vicinity, three points of interest are identified for which the effects of fogging pose potentially significant environmental costs. These are Interstate Highway 40 at Caney Creek, Gallaher Bridge and the Oak Ridge National Laboratory (ORNL). Each is within the predicted areas of plume interception with the ground as shown in Tables 10.1A-7 through 10.1A-10. Ground fog hours per year for these three points of interest are presented in Table 10.1-3. For all four mechanical draft wet-type towers, ground fog occurrences are limited to one hour or less per year. Compared to the occurrences of natural fog indicated in Tables 2.6-9 and 2.6-10, the small quantities of cooling tower induced fogging at Interstate Highway 40, Gallaher Bridge and ORNL are insignificant. Consequently, no substantial environmental advantage would be gained by any of the alternatives from the viewpoint of fog control.

The valleys located along a SW-NE line passing through the Site will experience the largest portion of the potential fog hours identified in Table 10.1-2 due to the predominance of wind action in these two directions as shown in Table 2.6-18. As these valleys are lightly populated

(particularly to the northeast which is an AEC restricted area), fogging is not expected to present a significant environmental concern. Ground fog caused by any of the alternative cooling systems will not extend to regional airports and will not significantly affect navigation on the Clinch River, as indicated in Section 5.1.8.2.

10.1.4.1.2 AESTHETIC IMPACT OF PLUMES

Mean lengths of visible plumes for the five cooling tower alternatives are given in Table 10.1A-5. These values represent maximum plume extents as the effects of changing weather conditions that would tend to dissipate the plumes are not considered. The longest plumes are produced by the natural draft tower while the zero percent plume severity wet/dry tower produces the shortest plumes. In general, extensive plumes occur during days of high relative humidity when natural cloud cover is to be expected. Merger of cooling tower plumes with the cloud cover would be likely, particularly for the natural draft tower plumes which rise higher than those of the mechanical draft towers.

As the Site is located in a sparsely populated area, significant aesthetic impact is not anticipated. The uneven topography of the Site area will tend to obscure the full extent of cooling tower plumes from the local populace.

10.1.4.2 DRIFT

Drift deposition for the five cooling tower alternatives are presented in Table 10.1-4. Highest drift deposition occurs for the mechanical draft wet tower, linear array, while the lowest deposition occurs for the zero percent plume severity tower. (No drift is produced by the dry tower.) Drift deposition for the spray pond would be similar to that of the mechanical draft tower, linear array. The drift calculations in Table 10.1-4 are based on highly conservative assumptions; notable is

the disregard for the diluting effects of rainfall. Given these assumptions, the drift depositions calculated are extremely small. Drift deposition is the highest for the mechanical draft wet tower, linear array; however, it is equivalent to less than 0.00007 pounds per square foot per day. Drift deposition of this magnitude does not pose a significant environmental concern, as indicated in Section 5.1.8.3.

10.1.4.3 WATER USE

Potential environmental concerns relating to cooling system water use include entrainment and impingement of aquatic life due to withdrawal from the Clinch River, consumption via evaporation and drift losses and changes to river water quality and impact on aquatic life arising from the blowdown of waste heat and chemicals. None of these concerns are applicable to the mechanical draft dry tower as it is designed for a 100 percent closed water cycle.

10.1.4.3.1 WITHDRAWAL

The cooling system utilizes the largest portion of the CRBRP makeup water flow and is primarily responsible for the entrainment of aquatic life. As discussed in Section 5.1, entrainment losses for the mechanical draft wet tower, linear array, (selected cooling system) are not significant due to the small size of the makeup flow in relation to the Clinch River. Although the natural draft wet tower requires a greater makeup flow (0.3% above that of the mechanical draft wet towers) and the wet/dry towers use less water (∿8% below the mechanical draft wet towers makeup flow), only marginal differences in the magnitude of entrainment effects would exist among the alternative cooling systems (except for the dry tower).

Impingement of fish and other aquatic life is not directly a function of the cooling system water requirements but depends primarily on the design

of the intake system. No measurable differences in the magnitude of impingement losses would be anticipated among any of the cooling system alternatives that require a flow of makeup water.

10.1.4.3.2 WATER CONSUMPTION

In arid regions of the country, notably the southwest, water use is a critical environmental concern. However, in the southeast and, in particular, the Oak Ridge Tennessee area, ample rainfall and a highly developed system of storage reservoirs ensure abundant freshwater supplies.[4] Hence, the deployment of evaporative cooling systems does not in general constitute a significant environmental cost in regard to water consumption.

For the CRBRP recirculating cooling system, water consumption is a very small quantity in comparison to the total annual flow of the Clinch River. The per day sum of evaporation, drift and associated water losses for the mechanical draft wet tower cooling system represents only 0.2 percent of the average daily discharge of Melton Hill Dam (average value for operating life of dam to date can be seen in Table 2.5-3). In the context of the above description of regional water availability, this amount may be considered negligible. However, conditions of no flow occur in the river at the Site during Melton Hill Dam zero release periods. At these times, the relative consequence of cooling system water consumption will increase; however, when compared to the storage capacity of the Melton Hill Reservoir, the water consumption attributable to the reference cooling system represents a negligible percentage of the reservoir capacity.

Cooling system water consumption can be eliminated by the use of dry cooling towers and decreased slightly by the deployment of a wet/dry tower. However, the foregoing discussion indicates that the environmental advantage to be gained by a water use savings is not significant.

10.1.4.3.3 BLOWDOWN

All of the alternative cooling systems operate on a recirculating mode and, with the exception of the mechanical draft dry tower, utilize evaporative cooling which consumes water. Water lost through evaporation drift and blowdown must be replaced to maintain circulating flow. Blowdown prevents excessive accumulations of chemicals which cause scale formation and corrosion of pipes and equipment. For the CRBRP, a chemical concentration factor of 2.5 will be utilized. The cooling system blowdown will contain essentially river water with all chemical constituents concentrated 2.5 times.

Thermal Characteristics

Thermal discharges are a major environmental concern associated with power production. The CRBRP utilizes a recirculating or closed loop cooling system that shifts primary heat dissipation responsibilities from the natural water body (the Clinch River) to a specifically designed external device. Heat load to the river and, consequently, thermal impact are significantly reduced. Each of the cooling system alternatives operates in this fashion with the exception of the dry cooling tower which is a completely closed-loop system with no blowdown of heated water.

Blowdown (cold water) temperatures for the alternative cooling systems are presented in Figure 10.1-10. The mechanical draft wet tower produces the coldest blowdown throughout the year. Winter temperatures for the natural draft wet tower are nearly as low but summer temperatures are considerably higher. The spray pond blowdown is approximately five degrees warmer than the mechanical draft wet tower blowdown. Cold water temperatures for the zero percent plume severity wet/dry tower are equivalent to that of the reference system in summer

but deviate in winter as the utilization of the dry section reduces cooling efficiency. The same is true for the 30 percent plume severity wet/dry tower although its blowdown is uniformly warmer than the zero percent tower.

As previously noted, the primary environmental concern associated with the discharges of waste heat is the formation of thermal plumes. A discharge plume study has been performed to estimate the size and character of the anticipated CRBRP thermal mixing zones. This study is based on the performance of the selected cooling system and appears as an Appendix to Section 10.3. Figures 10.3A-6 through 10.3A-9 of this appendix illustrate the extent of the thermal plume formation under various Clinch River flow conditions. An examination of these figures indicates that the size and temperature differential of the plumes are reduced in summer compared to winter for both flowing and no-flow river conditions. This is primarily due to the higher pool elevations maintained in summer. In the context of the various cooling system alternatives, it may be inferred that blowdowns with elevated summer temperatures are more easily dissipated by the river than those with higher winter temperatures. Thus, the cold water temperature characteristics of the wet towers are preferable to those of the wet/dry towers in this regard.

Chemical Composition

Chemical discharges from all of the cooling system alternatives (with the exception of the dry tower) will be nearly identical as all have the same chemical concentration factor and produce similar blowdown flow rates. As indicated in Section 5.4, chemical discharges by the selected cooling system will not significantly affect either water quality or aquatic life in the Clinch River.

10.1.4.4 LAND USE

The CRBRP Site comprises over 1,300 acres of woodland. It is not at present, nor has it been recently, inhabited or utilized (for farming, forestry, etc). Use of a portion of the 1,300 acres for plant structures does not represent a significant land use concern as the area has for many years been in government custody and unavailable to the general public.

Land requirements for various alternative cooling systems range from one-half acre for the mechanical draft wet tower (both linear and circular configurations) to eight acres for the spray pond. Land requirements for each alternative both in terms of acres needed and percent of Site area utilized are presented in Table 10.1-5. When viewed in the latter perspective, the land requirement of even the spray pond (0.6% of Site acreage) appears small.

As the development of the CRBRP Site does not represent a loss of publicly-utilized land, the acreage required by the cooling system becomes a valid land use concern insofar as additional undisturbed woodland area within the Site boundaries must be committed. The results, shown in Table 10.1-5, indicate that this potential increase in land consumption is quite small for any of the alternative systems.

10.1.4.5 AESTHETIC IMPACT OF STRUCTURES

The Oak Ridge, Tennessee area in which the CRBRP Site is located is characterized by undulating topography. The region's many ridges will form a natural barrier to visual encounters with plant structures. Except for several residences on the south shore of the Clinch River across from the Site, observation of the plant will be limited.

In comparison to the tallest plant structure, the Reactor Containment Building measuring 169 feet above plant grade, only the natural draft

tower cooling alternative presents a greater visual attraction. To evaluate its potential aesthetic impact, four regional points of relatively high population use are considered: Melton Hill Dam, Oak Ridge National Laboratory (ORNL), Interstate 40 and the Gallaher Bridge. A measure of visual impact at each of these four locations of the natural draft tower compared to the reactor dome is presented in Table 10.1-6. (All of the other cooling system alternatives are sufficiently low in profile that they are not visible from any of these points.) Figure 10.1-11 depicts the actual view of the plant (with natural draft tower cooling system) from two of the locations.

At two of the locations, Interstate 40 and Melton Hill Dam, the reactor dome is not visible; only the natural draft tower rises above the horizon. For the other locations, the height of plant above the horizon is increased by over 200 feet due to the presence of the tower. Clearly, the natural draft tower would have a significant effect on plant visibility as seen in Figure 10.1-11. The translation of this effect into a measure of adverse aesthetic impact is, of necessity, a subjective process heavily dependent on value judgements that are not well known. It is possible that a natural draft tower could be viewed as a desirable landmark. However, in view of hilly terrain and generally rural flavor of the region, the projection of concrete structures above tree-lined ridges must be considered an environmental intrusion rather than asset.

Only the natural draft cooling tower poses a significant aesthetic concern. The visibility of the remaining alternatives is limited to the area across the river from the Site. For the few people living there the spray pond might present a more attractive sight than cooling towers; however, this advantage for the spray pond is lost when regional points of higher population utilization are considered.

10.1.5 ECONOMIC COSTS

10.1.5.1 EFFECTS ON PLANT POWER PRODUCTION

In a recirculating cooling system, economics prevent the attainment of turbine back pressures similar to that of once through systems. As a consequence, losses in generating capability are incurred.

Auxiliary power requirements by the cooling system can be quite high, as seen in Table 10.1-7. This is true for mechanical draft towers where large horsepower fans are utilized to induce air movement. Modular spray ponds are also high energy users as electrical pumps are employed to force water through the banks of nozzles.

The combined effects of capability losses and energy requirements produce variations in plant net output of electricity among the alternative cooling systems. Annual average net output for each of the alternatives is presented in Table 10.1-7. Differentials among all alternatives except the dry tower are within a range of 3 MW. Compared to the reference mechanical draft wet tower, dry cooling imposes a 13.6 MW deficit on the CRBRP.

10.1.5.2 MONETARY COSTS

The determination of monetary costs is based on the economic factors listed in Table 10.1-8. Monetary costs for the cooling system alternatives are presented in Table 10.1-9. These are present worth values and are expressed in incremental fashion with the mechanical draft wet tower, linear array, as the base.

A comparison of total cost for each system shows the mechanical draft wet tower, linear array, to be the least expensive cooling system alternative. The natural draft tower, both wet/dry towers and the spray pond

are within a range of $2.0 to 2.5 million higher in cost. By far the most expensive system is dry cooling with a $15.5 million price increase over that of the mechanical draft wet tower.

10.1.6 COMPARISON OF ALTERNATIVES

10.1.6.1 DIRECT COMPARISON OF REASONABLE ALTERNATIVES

A summary of the environmental and economic costs for the cooling system alternatives is presented in Table 10.1-10. The lowest economic costs are realized by the mechanical draft wet tower, linear array. As capsulized in the Table 10.1-10 and detailed in Section 5.1, its environmental costs are not significant.

Improved control over atmospheric releases is the primary environmental advantage offered by the circular array mechanical draft wet tower, natural draft wet tower and both wet/dry towers. The marginal reductions in ground fogging and drift deposition attributable to the circular array design are not of sufficient magnitude to justify the system's higher economic cost. Although the natural draft tower eliminates ground fogging and produces the least drift of the wet-type systems, greater plume lengths, higher blowdown temperatures and increased plant visual impact counterbalance these positive features. Consequently, the $2.19 million additional system's cost is not offset by a clear environmental advantage over the mechanical draft wet tower, linear array. Reductions in both ground fogging and plume extent are offered by the wet/dry tower alternatives; however, winter blowdown temperatures are substantially increased. As the predicted ground fog hours for the linear array mechanical draft wet tower are not significant in relation to regional occurrences of natural fogging, there is no overriding incentive to absorb the offsetting environmental disadvantage and higher economic costs associated with the wet/dry towers.

Spray pond performance is similar to the mechanical draft wet tower, linear array. Its environmental costs are roughly equivalent with a potential advantage in plume formation counterbalanced by higher blowdown temperatures and a larger land area requirement. Economic cost for the two systems is the deciding factor as a $2.52 million price increase and 3 MWe capability penality are assessed against the spray pond alternative.

The lowest environmental costs are realized by the mechanical draft dry tower. As this system is designed for closed cycle operation, no make-up water is normally required and no vapor plumes, drift or blowdown are produced. Land requirements are increased, however, as many more cells are required to dissipate the plant heat load by dry mechanisms than are needed for the wet towers. Economic costs for the dry tower are substantial as a 13.6 MWe capability penality and $15.5 million price increase over the linear array mechanical draft wet tower are incurred. The burden of these economic costs would have to be offset by significant reductions in environmental impact. However, as the mechanical draft wet tower, linear array, does not represent a significant environmental concern, the dry tower economic costs are not justified.

10.1.6.2 REASONS FOR SELECTION OF CHOSEN SYSTEM

The selected cooling system for the CRBRP is the mechanical draft wet tower, linear array, shown in Figure 10.1-12. In contrast to once through cooling, it provides significant protection from the adverse environmental effects of thermal discharges. It is economically preferable to, and environmentally competitive with, other recirculating mode cooling systems and will not have any significant environmental costs associated with its operation.

TABLE 10.1-1

DESIGN CONDITIONS FOR THE COOLING SYSTEM ALTERNATIVES

	Spray Pond	Natural Draft Wet Tower	Mechanical Draft Wet Tower		Mechanical Draft Dry Tower	Mechanical Draft Wet/Dry Tower	
			Line Array	Circle Array		30% Plume Severity	0% Plume Severity
Circ. Water Flow (1,000 gpm)	212	265	212	212	400	265	212
Range (^{o}F)	25	20	25	25	13.25	20	25
Approach (^{o}F)	20	20	15	15	28 to dry bulb	20	15
Evaporation (gpm)	4,240	4,240	4,240	4,240	0	3,900*	3,900*
Drift (gpm)	110	130	110	110	0	120*	100*
Makeup (gpm)	7,050	7,070	7,050	7,050	**	6,520*	6,500*
Blowdown (gpm)	2,700	2,700	2,700	2,700	**	2,500*	2,500*
Total Heat Duty $\left(\frac{10^6 \text{ Btu}}{\text{hr}}\right)$	2,650	2,650	2,650	2,650	2,650	2,650	2,650
No. of cells	54	1	10	10	82	14	17
$\frac{\text{Heat duty}}{\text{cell}} \left(\frac{10^6 \text{ Btu}}{\text{hr}}\right)$	49.1	2,650	265	265	32.3	189	155.9
No. of towers	NA+	1	1	1	4	1	1
Tower size (feet)	Channel size 2 passes each 80' wide, 2,175' long	385 high 310 base	400 long 60 high 55 wide	240 diam 60 high	245' diam 78' high	340 diam 65 high	425 diam 65 high
No. of concentrations	2.5	2.5	2.5	2.5	NA+	2.5	2.5
Airflow, 10^6 cfm	NA+	14	17	17	110	14	17

*Annual average quantities. Summer operation will have the same values as the wet tower. Winter operation will have lower values.

**Almost zero during normal operation; does not include periodic cleaning

+Not applicable

TABLE 10.1-2

GROUND FOG POTENTIAL FOR COOLING TOWER ALTERNATIVES*

(Fog in hrs/yr)

Horizontal Visibility Through Fog (miles)	Natural Draft Wet Tower	Mechanical Draft Wet Tower		Mechanical Draft Wet/Dry Tower		Mechanical Draft Dry Tower
		Linear Array	Circular Array	30% Plume Severity	0% Plume Severity	
<1/2	0	146	146	138	138	0
<1/4	0	146	146	138	138	0
<1/10	0	100	92	0	0	0

*Based on Tables 10.1A-7 through 10.1A-10

TABLE 10.1-3

GROUND FOG FOR THREE POINTS OF INTEREST IN THE CRBRP SITE VICINITY*

Point of Interest	Distance from CRBRP (miles)	Direction from CRBRP	Horizontal Visibility Through Fog (miles)	Ground Fog (in hours/year)			
				Mechanical Wet Tower		Mechanical Wet/Dry Tower	
				Linear Array	Circular Array	30% Plume Severity	0% Plume Severity
Interstate 40 @ Caney Creek	1.1	SSE	1/2	0.1	0.1	0	0
			1/4	0.1	0	0	0
			1/10	0	0	0	0
Gallaher Bridge	1.6	NW	1/2	0.8	0.8	0.1	0
			1/4	0.8	0.8	<0.1	<0.1
			1/10	0.7	0.5	0	0
ORNL	4.5	NE	1/2	0.1	<0.1	<0.1	<0.1
			1/4	0.1	<0.1	0	0
			1/10	<0.1	0	0	0

*Based on Table 10.1A-12

TABLE 10.1-4

DRIFT DEPOSITION FOR COOLING TOWER ALTERNATIVES

	Natural Draft Wet Tower	Mechanical Draft Wet Tower		Mechanical Draft Wet/Dry Tower	
		Linear Array	Circular Array	30% Plume Severity	0% Plume Severity
Drift Deposition* (lbs/acre-month)	3	89	74	44	37

*Drift for compass direction having highest deposition (from Tables 10.1A-15 through 10.1A-19)

TABLE 10.1-5

LAND REQUIREMENTS FOR ALTERNATIVE COOLING SYSTEMS

	Spray Pond	Natural Draft Wet Tower	Mechanical Draft Wet Tower		Mechanical Draft Dry Tower	Mechanical Draft Wet/Dry Tower	
			Linear Array	Circular Array		30% Plume Severity	0% Plume Severity
Land required (in acres)	8.0	1.7	0.5	1.0	4.3	2.1	3.3
Fraction of Site Area (as %)	0.57	0.12	0.03	0.07	0.31	0.15	0.24

TABLE 10.1-6

VISUAL IMPACT OF NATURAL DRAFT WET COOLING TOWER COMPARED TO REACTOR DOME

Regional Points of High Population Use	Distance from CRBRP (miles)	Visual Impact (%)* Reactor Dome (169 feet)	Visual Impact (%)* Natural Draft Tower (385 feet)
Gallaher Bridge	1.8	20	53
I-40 W**	2.6	0	11
ORNL	4.0	9	23
Melton Hill Dam	4.5	0	9
		29	96

*Visual Impact: degree of impact varies directly with height of structure above horizon (h) and inversely with viewing distance from plant site (d)

$$I(\%) = \frac{h/385}{(d/2)/0.7} \times 100$$

**An approximate one mile long section of I-40 located SE of plant site in which the driver of a vehicle traveling in the westbound lane will have a portion of the natural draft wet tower in the center of his vision.

TABLE 10.1-7

EFFECTS OF ALTERNATIVE COOLING SYSTEMS ON PLANT POWER PRODUCTION

	Spray Pond	Natural Draft Wet Tower	Mechanical Draft Wet Tower		Mechanical Draft Dry Tower	Mechanical Draft Wet/Dry Tower	
			Linear	Circular		30% Plume Severity	0% Plume Severity
Auxiliary Power, kW	1,310	(521)	Base	Base	14,431	1,034	666
Net Output, MWe	(2.9)	0.2	Base	Base	(13.6)	(2.2)	(1.4)
Total Annual Generation 10^6 kW-hrs	(16)	3	Base	Base	(80)	(12)	(7)

TABLE 10.1-8

ECONOMIC FACTORS

Annual Fixed Charge	11 Percent
Capability Cost	$338/kw
Plant Life	30 years
Fuel Cost	$0.00161/kw Hr.
Average Capacity Factor	68.5 Percent

TABLE 10.1-9

ECONOMIC COSTS FOR THE COOLING SYSTEM ALTERNATIVES
ALL COSTS ARE MILLIONS OF DOLLARS ON A DIFFERENTIAL BASIS

	Spray Pond	Natural Draft Wet Tower	Mechanical Draft Wet Tower		Mechanical Draft Dry Tower	Mechanical Draft Wet/Dry Tower	
			Linear	Circular		30% Plume Severity	0% Plume Severity
Fixed Costs							
Condenser Tube Cost and Installation	0.0	0.16	Base	Base	0.47	0	0.16
Condenser Shell and Erection	0.0	0.18	Base	Base	--	0	0.18
Circulating Water Pumps and Motors	0.0	0.17	Base	Base	0.58	0	0.17
Cooling Tower	(1.32)	2.02	Base	0.50	8.57	1.86	1.05
Excavation	2.32	0.0	Base	Base	0.0	0.0	0.0
Total Fixed Costs	0.91	2.53	Base	Base	9.62	1.56	1.86
Variable Costs							
Capitalized Fuel Costs	0.23	(0.05)	Base	Base	1.17	0.10	0.17
Total Capability Cost	1.38	(0.29)	Base	Base	4.70	0.23	0.33
Total Variable Costs	1.61	(0.34)	Base	Base	5.87	0.33	0.50
Total Fixed and Variable Costs	2.52	2.19	Base	0.50	15.49	2.06	2.19

TABLE 10.1-10

SUMMARY OF ENVIRONMENTAL AND ECONOMIC COSTS FOR THE ALTERNATIVE COOLING SYSTEMS

	Report Section	Unit of Measure	Spray Pond	Natural Draft Wet Tower	Mechanical Draft Wet Tower		Mechanical Draft Dry Tower	Mechanical Draft Wet/Dry Tower	
					Linear Array	Circular Array		30% Plume Severity	0% Plume Severity
Environmental Costs									
Plume Formation									
Ground Fog	10.1.4.1.1	Percent of natural fog*	NA	0	2.3	2.2	--	0.1	<0.1
Visible Plume Extent	10.1.4.1.2	Mean length in miles(95% R.H., C stability: Table 10.1A-5)	NA	2.9	1.8	1.9	--	1.5	1.6
Drift Deposition	10.1.4.2	Lbs/sq foot-day (from Table 10.1-4)	$\sim 7 \times 10^{-5}$	0.2×10^{-5}	6.8×10^{-5}	5.7×10^{-5}	--	3.4×10^{-5}	2.8×10^{-5}
Water Use									
Entrainment	10.1.4.3.1	Percent/yr**	0.33	0.33	0.33	0.33	0	0.30	0.30
Impingement	10.1.4.3.1	Qualitative	Same	Same	Same	Same	0	Same	Same
Water Consumption	10.1.4.3.2	Percent of Melton Hill Dam releases+	0.20	0.20	0.20	0.20	0	0.19	0.19
Heat Rejection	10.1.4.3.3	Heat load to river in winter as percent of total plant heat duty	0.052	0.049	0.048	0.048	0	0.055	0.052
Initial Temperature Difference	10.1.4.3.3	Blowdown temperature minus river ambient (in winter), °F	36	31	30	30	--	48	43
Effect of Chemicals	10.1.4.3.3	Qualitative	Negligible	Negligible	Negligible	Negligible	None	Negligible	Negligible
Land Use	10.1.4.4	Percent of Site acreage required	0.57	0.12	0.03	0.07	0.31	0.15	0.24
Visual Impact	10.1.4.5	See Table 10.1-6	0	96	0	0	0	0	0
Economic Costs									
Plant Net Output	10.1.5.1	MWe differential	(2.9)	0.2	Base	Base	(13.6)	(2.2)	(1.4)
Total System Cost	10.1.5.2	Present worth in millions of $	2.52	2.19	Base	0.50	15.49	2.06	2.19

*Maximum induced fog for <1/4 mile visibility (Gallaher Bridge: Table 10.1A-12) as percent of natural fog at Oak Ridge City Office (Table 2.6-9)

**Makeup flow (Table 10.1-1) as a percentage of annual releases (from Table 2.5-3); density of entrainable organisms assumed uniform

+Evaporation and drift losses as percentage of annual releases

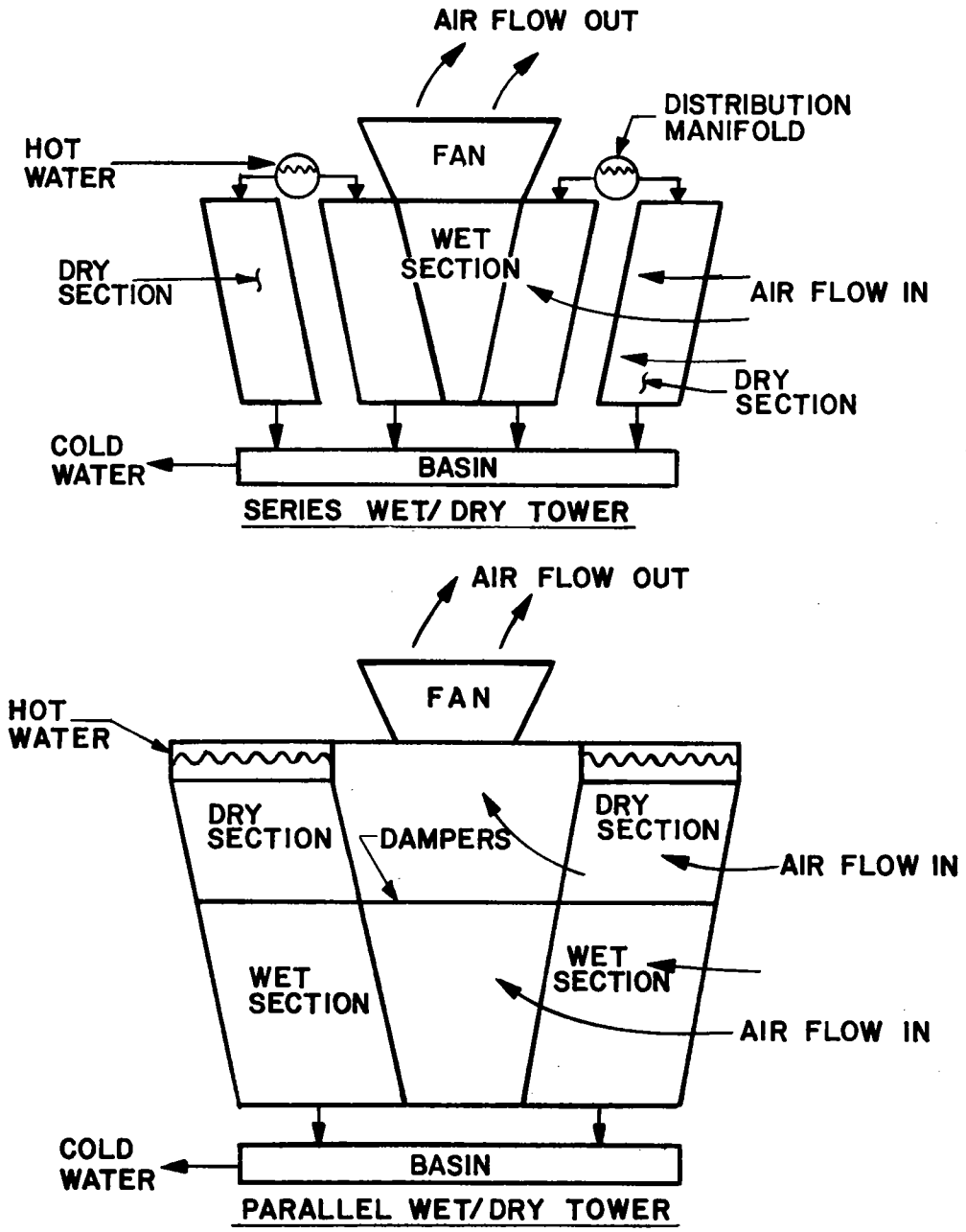

Figure 10.1-1 THE MECHANICAL DRAFT WET/DRY COOLING TOWER

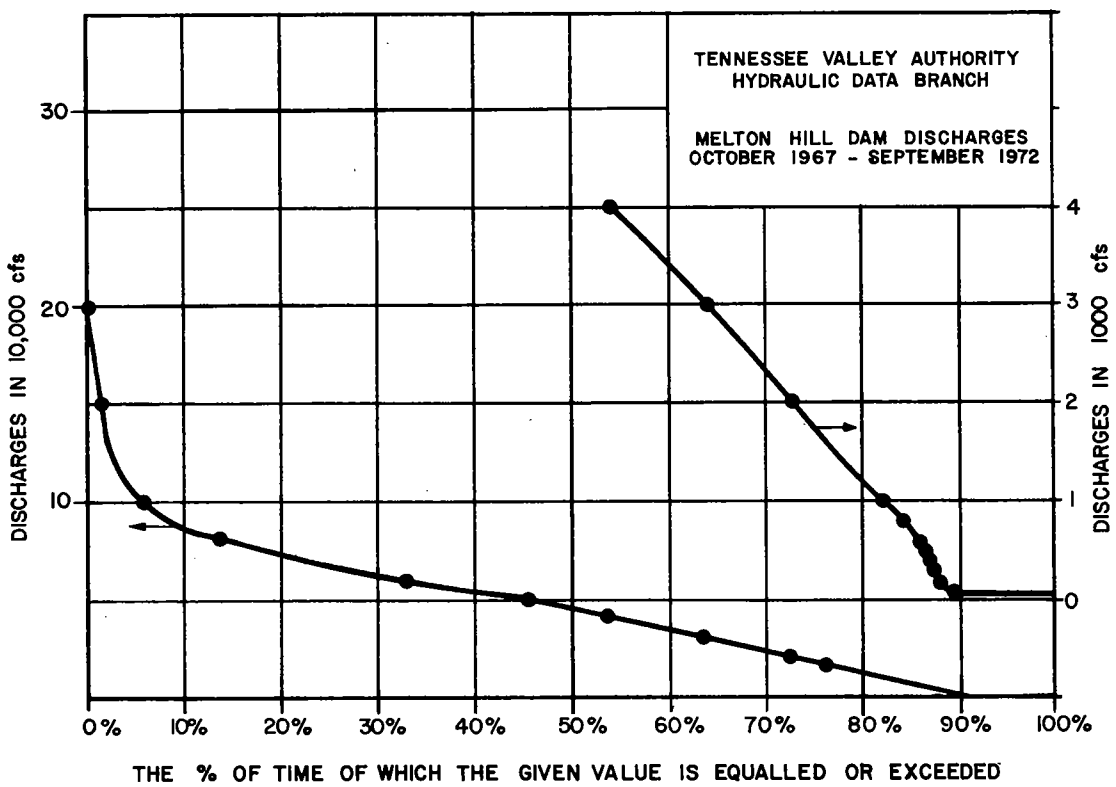

Figure 10.1-2 FLOW CONDITIONS IN CLINCH RIVER

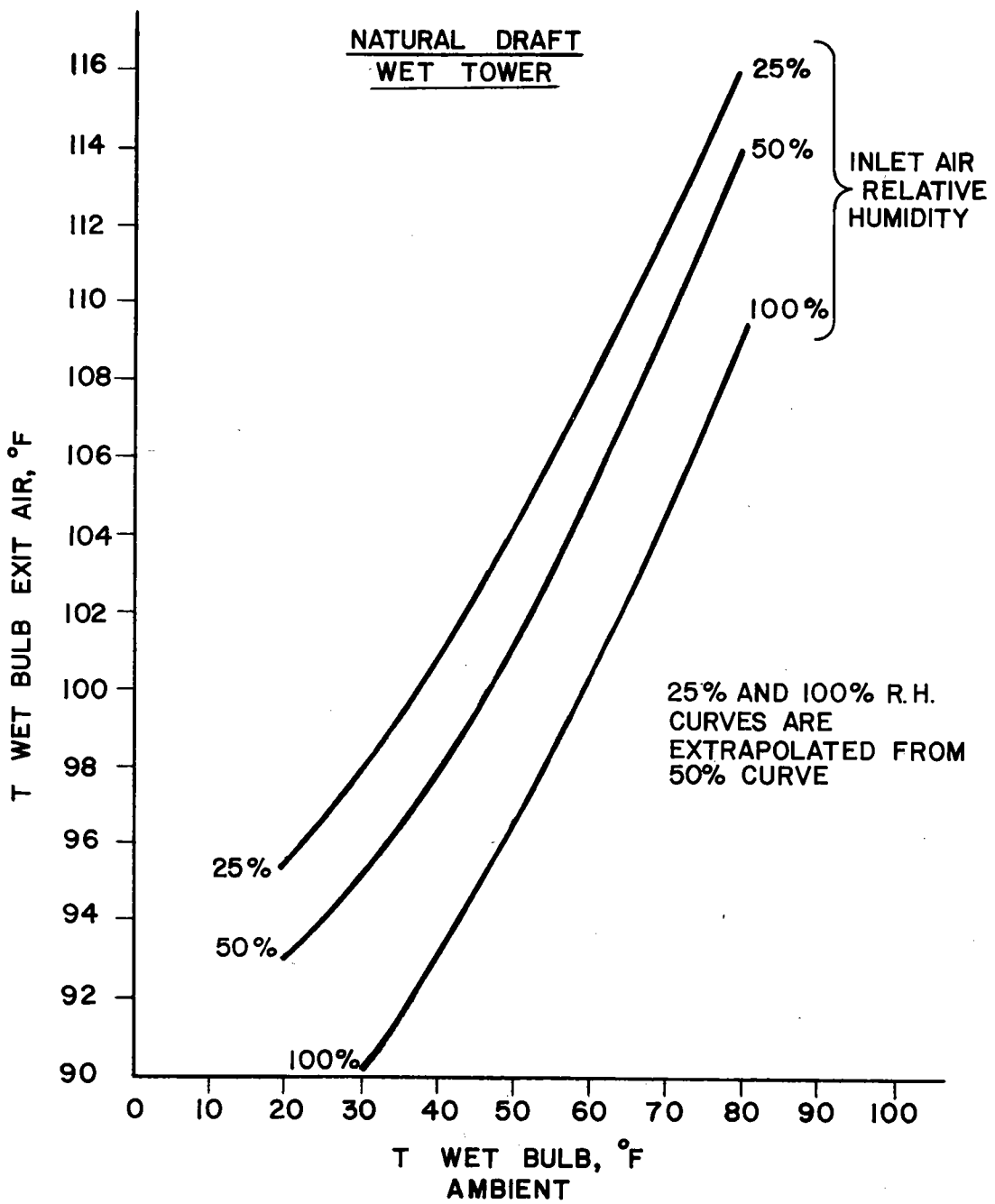

Figure 10.1-3 EXHAUST CONDITIONS FOR THE NATURAL DRAFT WET TOWER

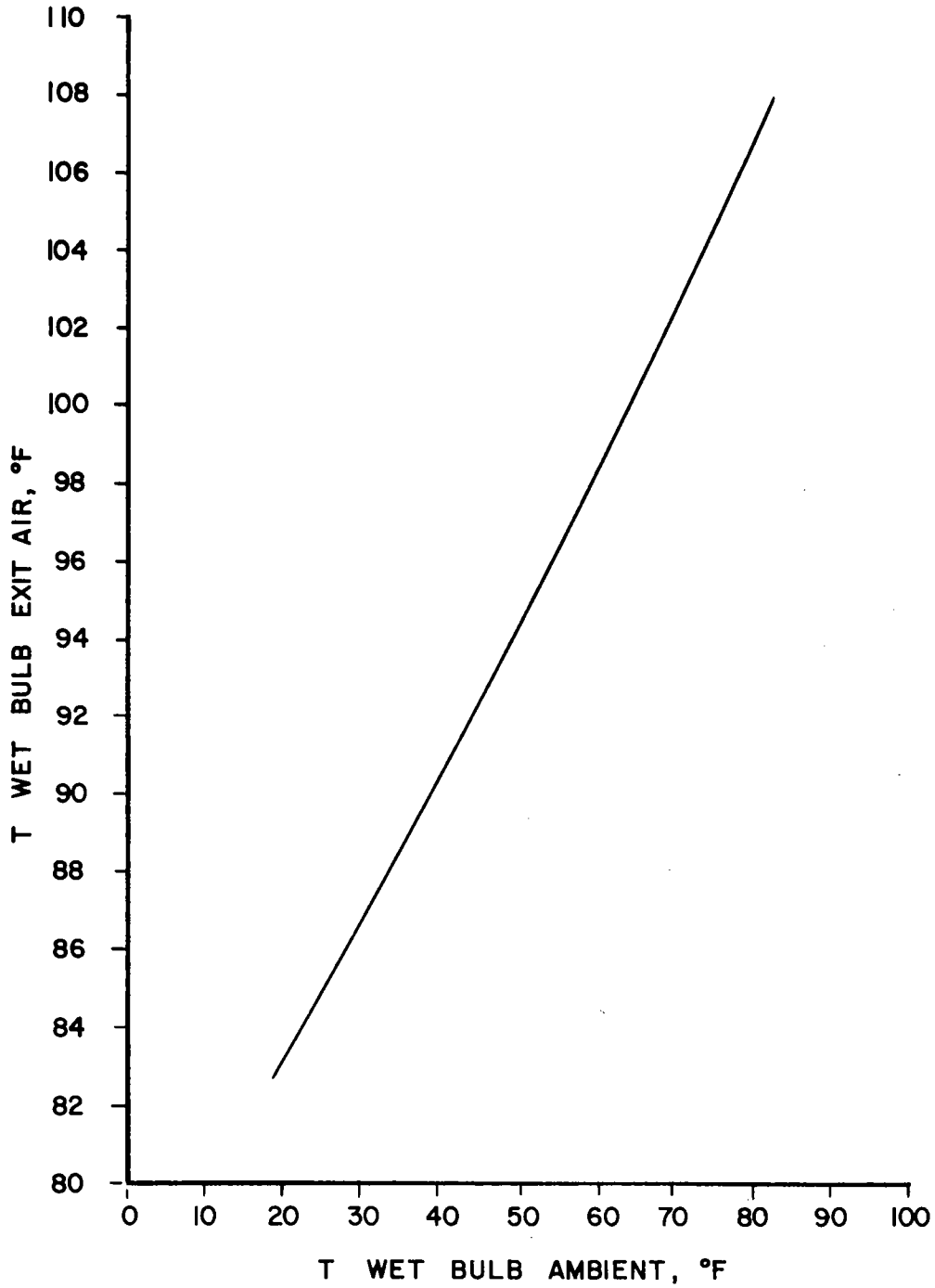

Figure 10.1-4 EXHAUST CONDITIONS FOR THE MECHANICAL DRAFT WET TOWER

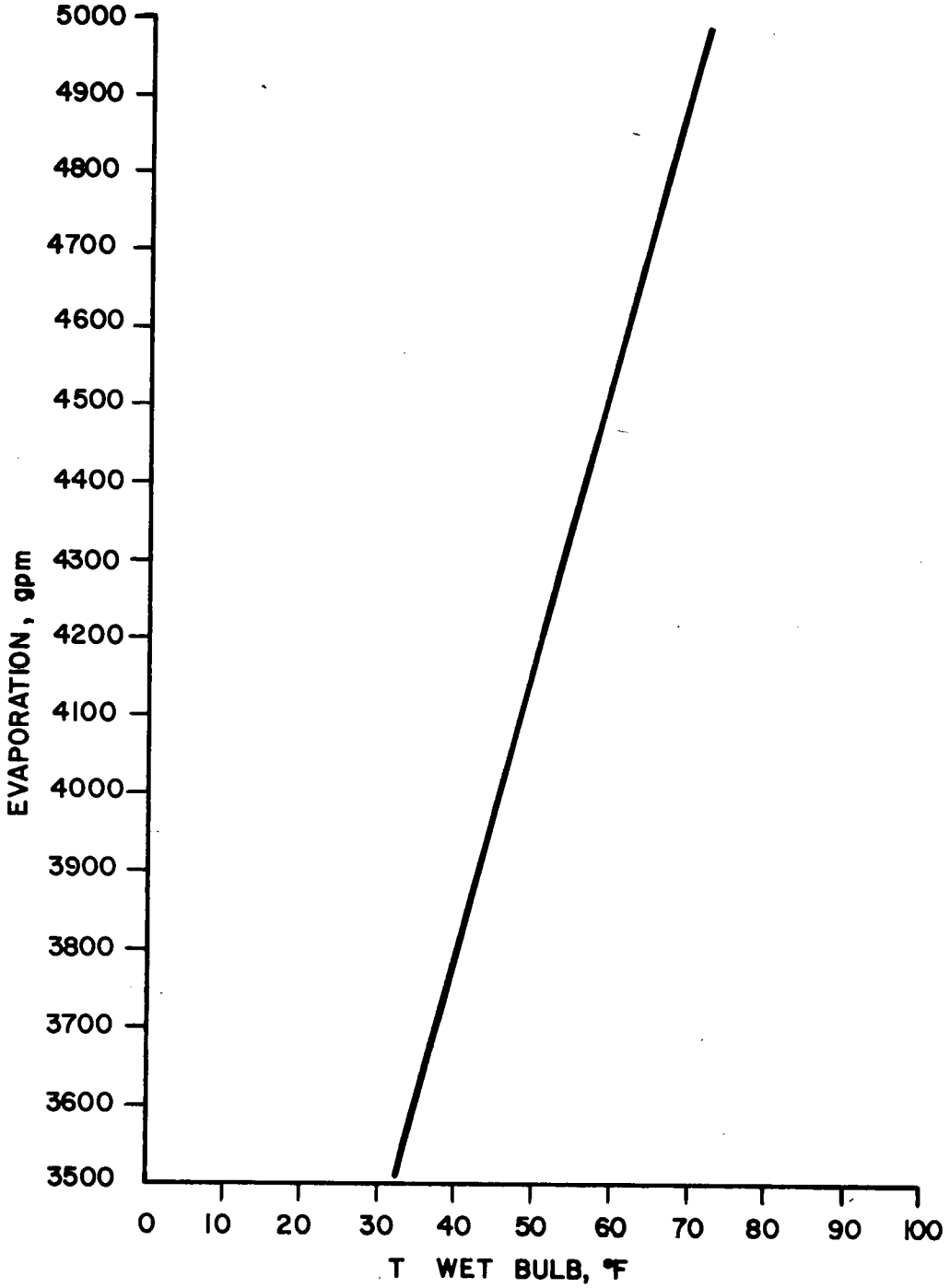

Figure 10.1-5 EVAPORATION RATES FOR THE MECHANICAL DRAFT WET TOWER

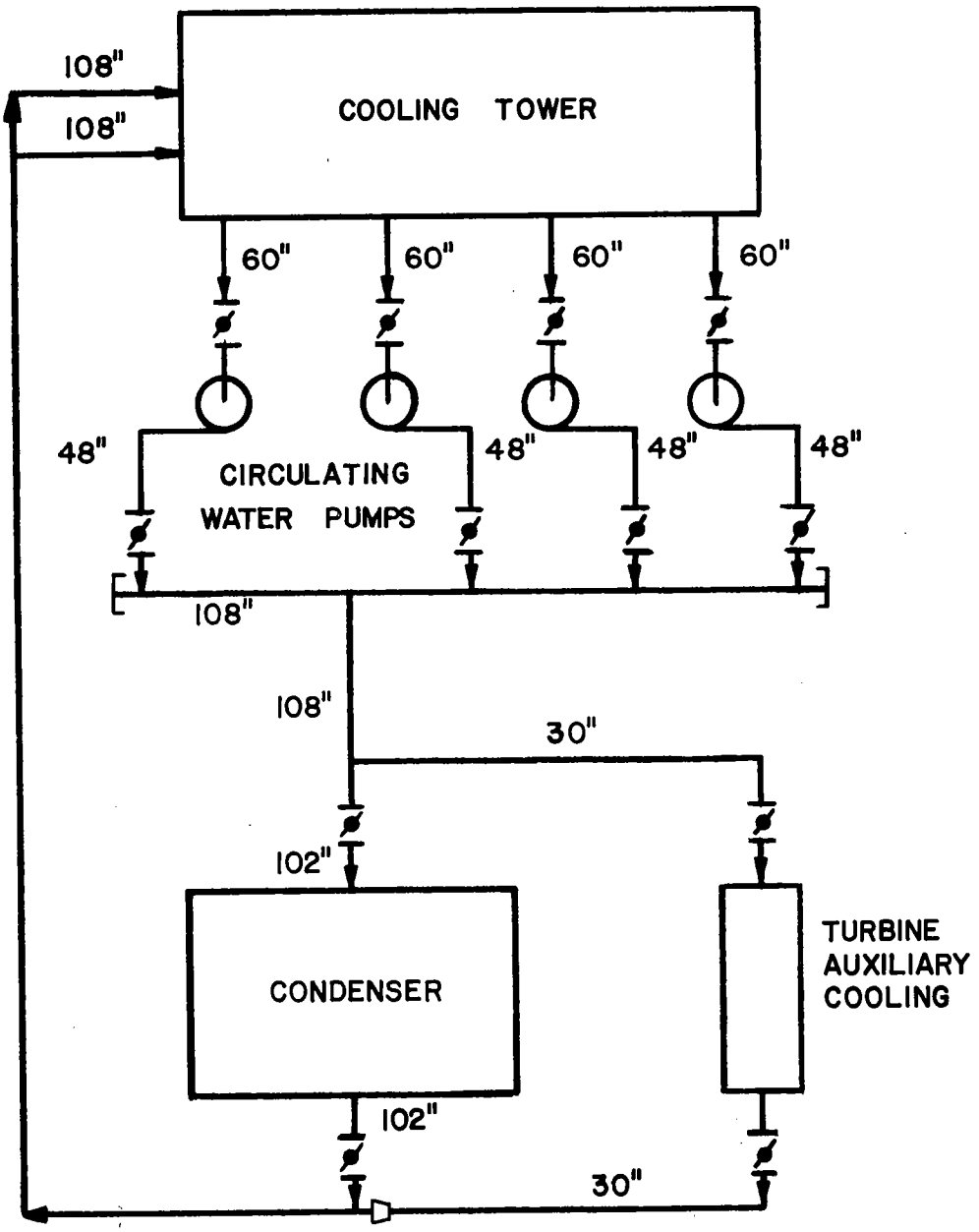

Figure 10.1-6 HELLER CYCLE DRY COOLING TOWER[3]

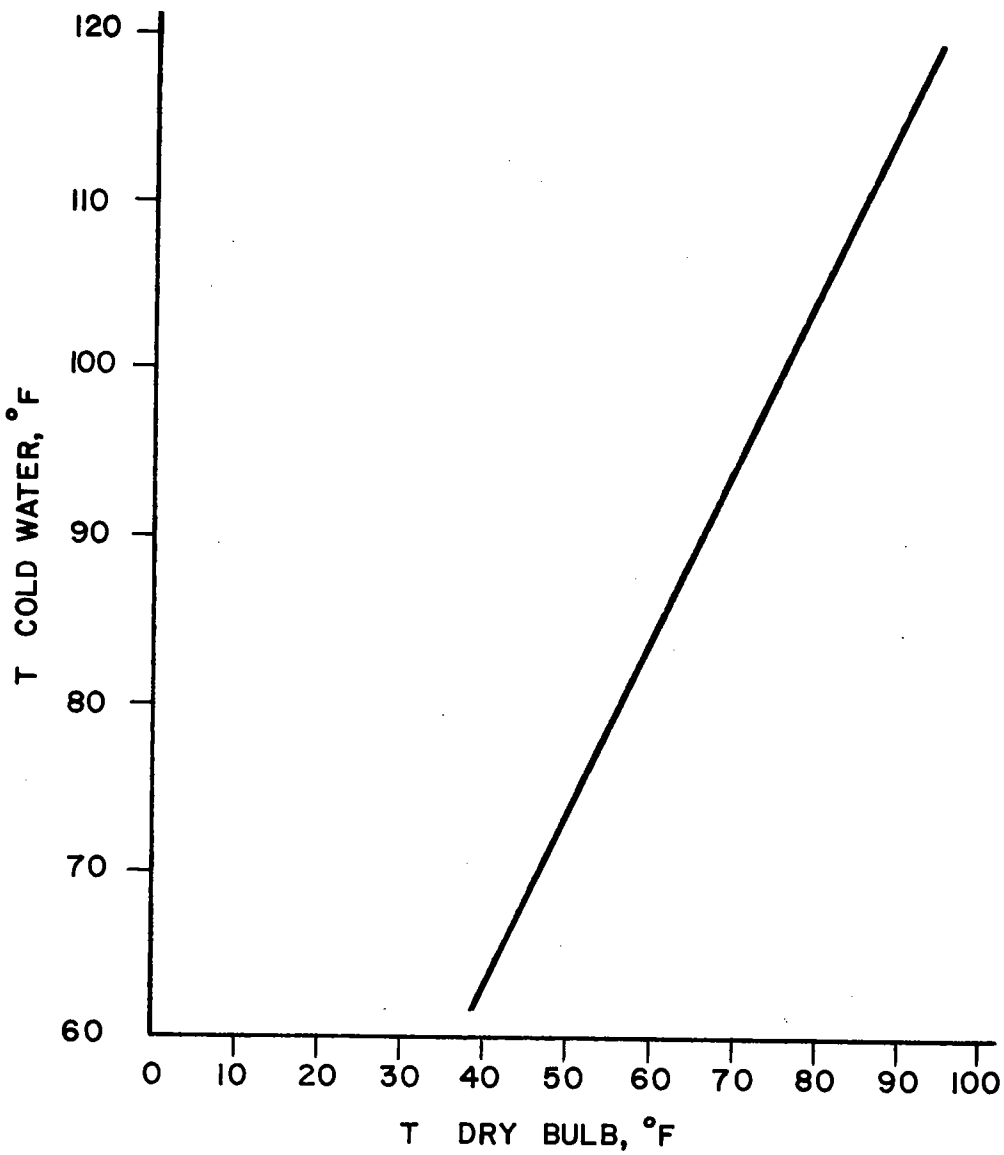

Figure 10.1-7 COLD WATER TEMPERATURE FOR THE MECHANICAL DRAFT DRY TOWER

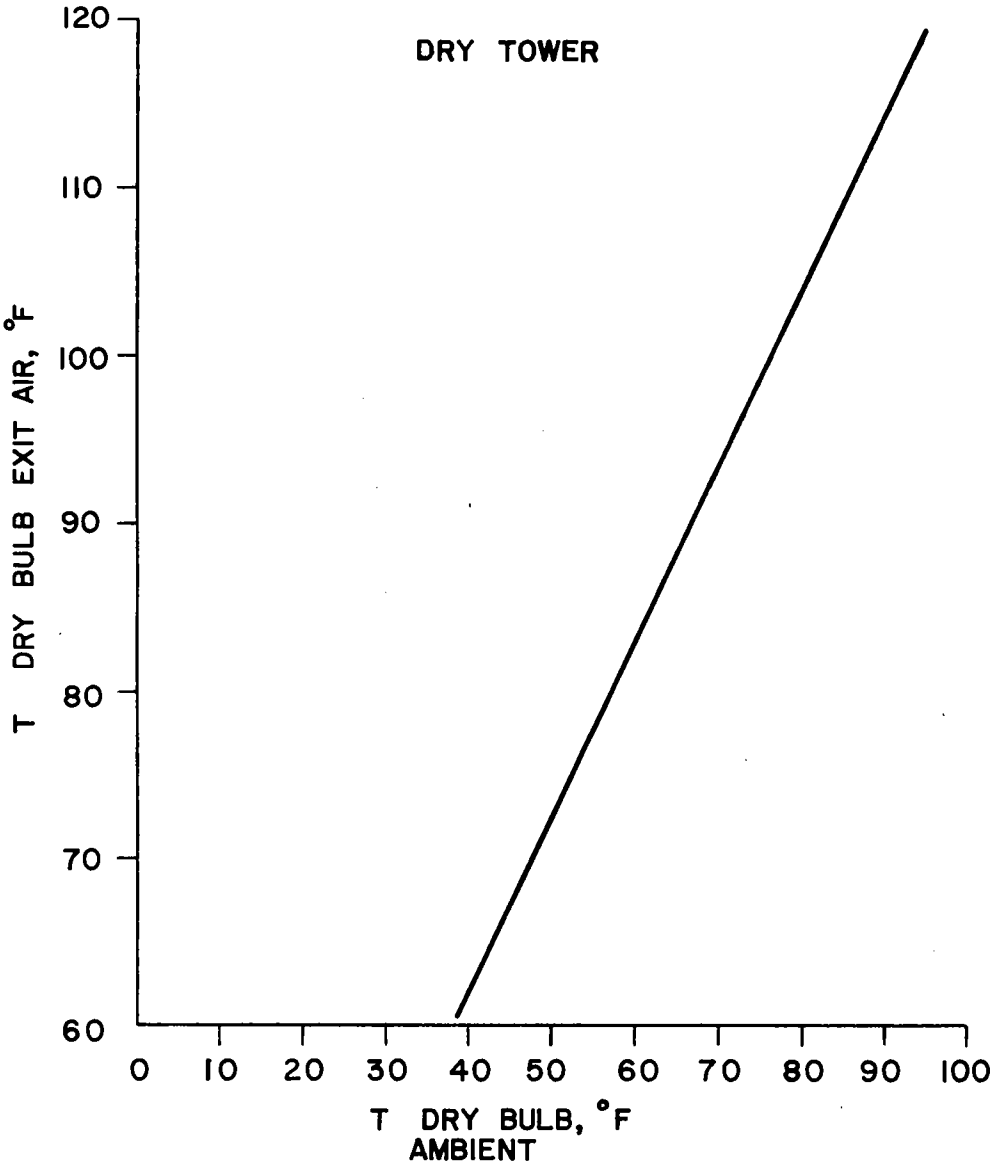

Figure 10.1-8 EXHAUST CONDITIONS FOR THE MECHANICAL DRAFT DRY TOWER

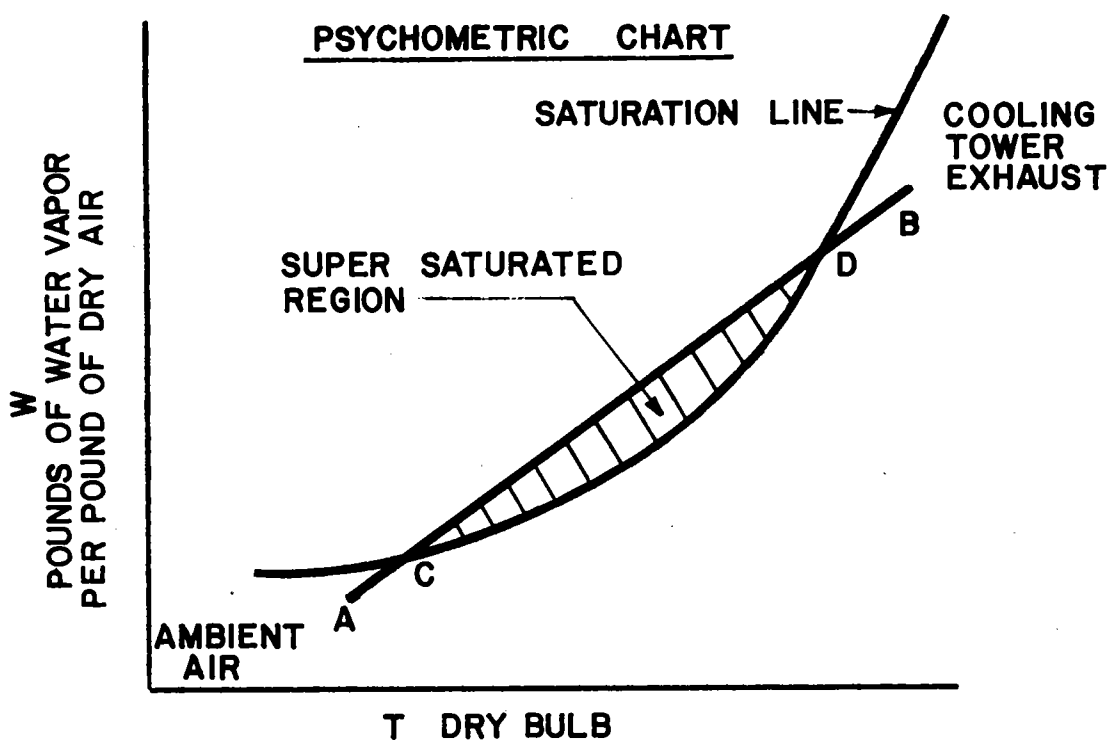

$$\text{PLUME SEVERITY} = \frac{T_D - T_C}{T_B - T_A} = \frac{W_D - W_C}{W_B - W_A}$$

Figure 10.1-9 DEFINITION OF PLUME SEVERITY

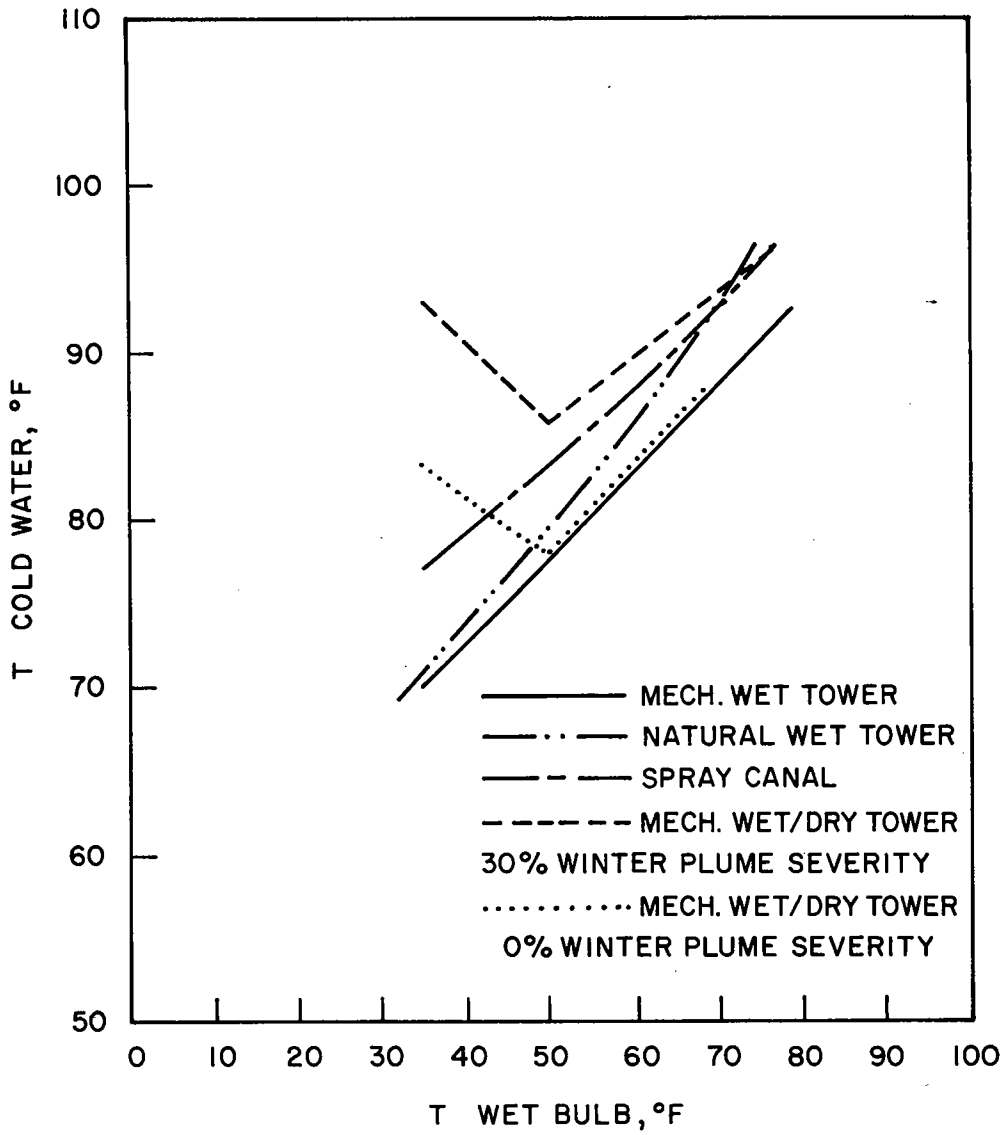

Figure 10.1-10 BLOWDOWN TEMPERATURES FOR THE EVAPORATIVE COOLING SYSTEM ALTERNATIVES

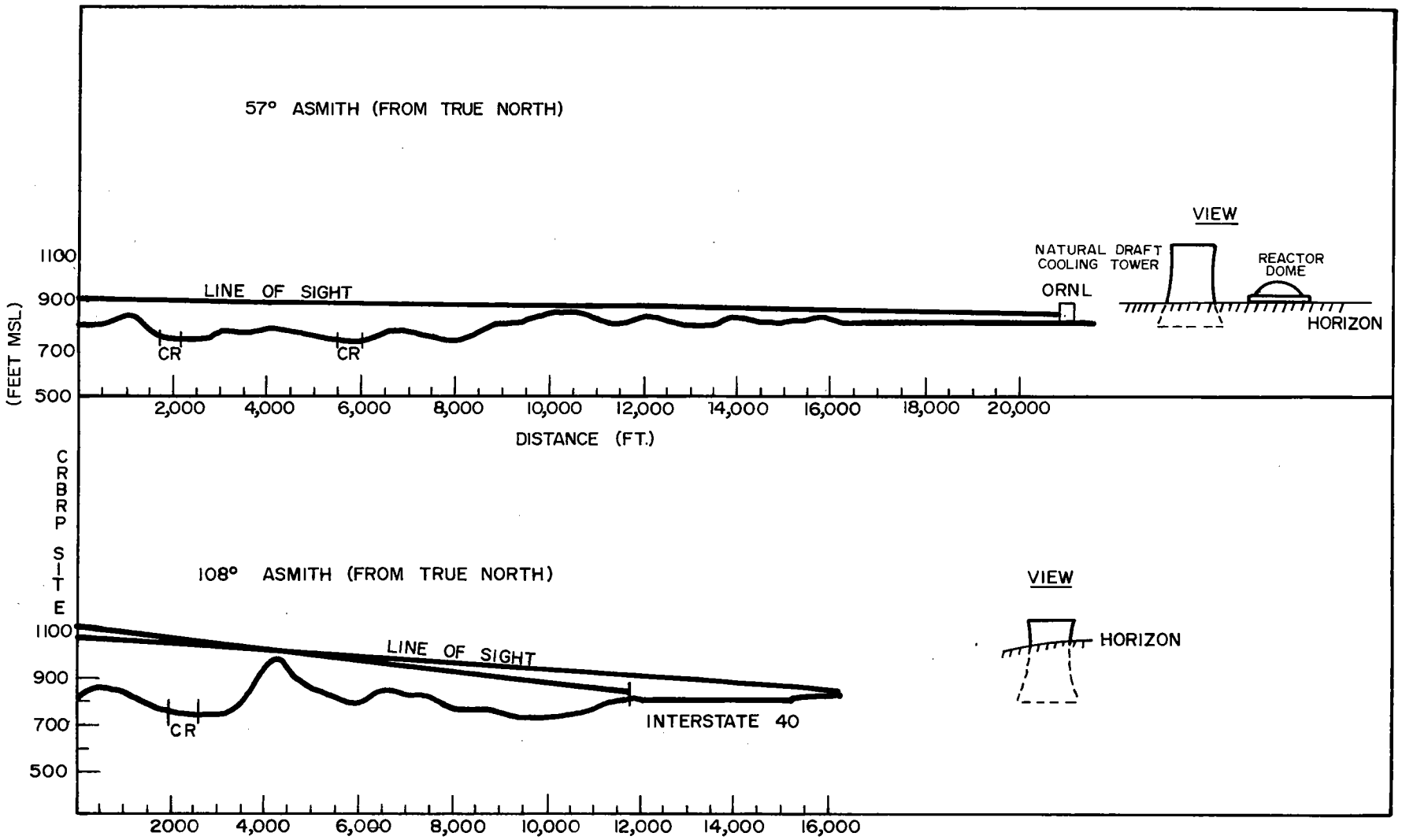

Figure 10.1-11 GROUND PROFILES AND DEPICTION OF CRBRP VISIBILITY FOR THE NATURAL DRAFT TOWER

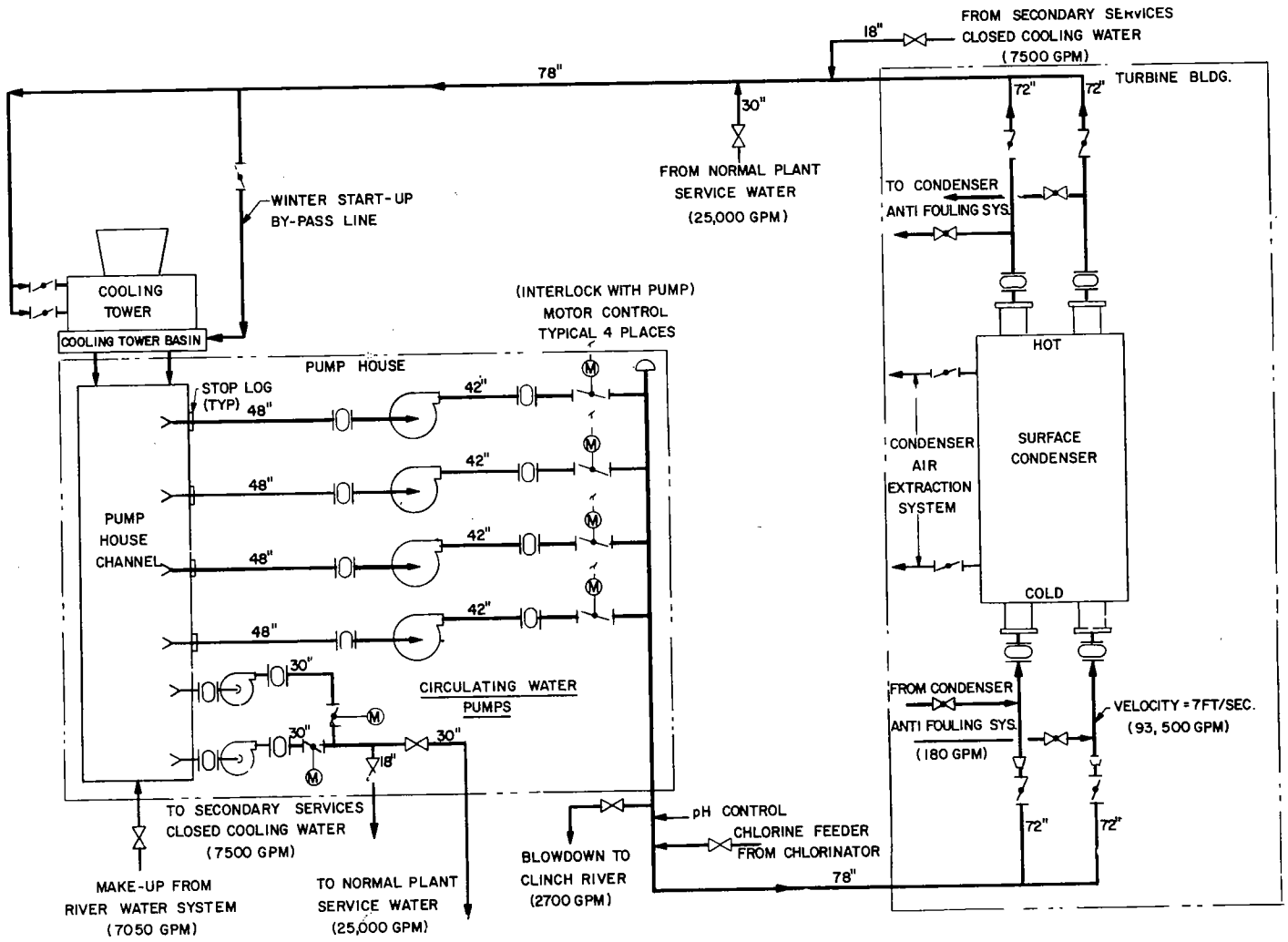

Figure 10.1-12 SELECTED COOLING SYSTEM--MECHANICAL DRAFT WET TOWER

10.2 INTAKE SYSTEM

Makeup water from the Clinch River will be required on a continuous basis during normal operation of the CRBRP. It is the function of the intake system to transport river water to the plant proper and to perform such pretreatment as may be required for the protection of equipment. This latter function is accomplished by screening devices that prevent the passage of large objects that could damage cooling system components.

It is this screening requirement that is responsible for the most important environmental concern associated with the intake system -- entrapment and impingement of fish. Other environmental effects of the intake system include entrainment of aquatic organisms (although this is primarily controlled by the design and water requirements of the cooling system), construction effects and the aesthetic impact of the structure itself.

The intake system for the CRBRP has been selected to reduce adverse environmental impact to that degree consistent with the need for an uninterrupted water supply and the results of benefit-cost analysis.

A perforated pipe is the selected system for the CRBRP.

Alternatives considered for the CRBRP intake system are:

1. Conventional traveling screens;
2. Traveling screens mounted at angle to flow;
3. Single entry-double exit traveling screens;
4. Horizontal screens;
5. Louver system;
6. Electric screens;

7. Bubble, sound and light barriers;

8. Perforated pipe; and

9. Infiltration bed.

10.2.1 DESCRIPTION OF ALTERNATIVES

10.2.1.1 CONVENTIONAL TRAVELING SCREENS

The most commonly employed mechanical screening device in use today is the conventional traveling screen. This intake system is highly reliable, applicable to a wide variety of screening situations, fairly insensitive to fluctuating water levels and well standardized in terms of components. It does not, however, provide any mechanisms specifically directed at fish protection. It is included in this alternative study to represent the basic traveling screen concept that is also utilized by intakes that do possess fish protection modifications and to provide a readily identifiable base system to which the other alternatives can be compared.

A typical conventional traveling screens intake is depicted in Figure 10.2-1. Makeup water pumps located in bays at the rear of the structure draw water first through trash bars and then through the traveling screens. The trash bars prevent the passage of large objects such as logs and cans that might damage the screens. A mechanical rake is usually provided to periodically remove debris from the bars. The screens are positioned directly behind the bars and perpendicular to the incoming flow of water. Mounted on sprockets at the bottom and top (deck level) of the structure, the screens form a continuous band which rotates vertically. Only the bottom half of the screen is usually submerged. Objects greater in size than the screen mesh (normally 3/8 inch) are retained on the front face. Debris removal is accomplished by rotating the screens until the affected portion is at deck level where high pressure water jets cleanse the screen and deposit the debris

in troughs for land disposal. Traveling screens can be operated intermittently or continuously with either manual or automatic control.

10.2.1.2 TRAVELING SCREENS MOUNTED AT ANGLE TO FLOW

A modification of the conventional intake that does provide fish protection mechanisms is the traveling screens mounted at an angle to the flow. This intake system is illustrated in Figure 10.2-2.

Trash bars and rakes for the angle-mounted screens intake are identical in function and location with those of the conventional system. The vertical traveling screens, however, are positioned at an angle to the flow of incoming water. At one end of the screens, a fish escape channel with assist pump and return pipe to the river is provided.

The angle-mounting innovation causes the water flow to change direction at the screens. This creates a velocity component parallel to the screen face which assists in directing fish in imminent danger of impingement into the escape channel where the fish pump can transfer them safely back to the waterway.

10.2.1.3 SINGLE ENTRY-DOUBLE EXIT (PASSAVANT) SCREENS

A more advanced fish protection mechanism is a by-pass system incorporated into the standard single entry-double exit (Passavant) traveling screen. As shown in Figure 10.2-2, fish entering the intake can proceed without change in direction into an escape passage located directly behind the screens. This sytem permits lethargic fish (such as might be encountered during the winter months) to be carried to safety as a swimming response is not required by the fish.

The key to the Passavant intake is the screen mounting position. Screen faces are parallel to the incoming flow and water passes from the inside

of the screen band to the outside. The fish escape channel lies directly ahead of any fish approaching the screens. A fish pump and return pipe safely transport the fish to the waterway.

The Passavant screening concept has had wide application in Europe although it is rare in the United States; however, the particular design described above has not been previously used but can be built using proven and available components.

10.2.1.4 HORIZONTAL TRAVELING SCREENS

One of the most promising screening concepts designed specifically for fish protection is the horizontal traveling screen. It functions by inducing a swimming response in the fish which will directly lead to their removal from the intake and safe return to the waterway.

Fish protection features of the horizontal traveling screen are illustrated in Figure 10.2-2 and resemble those of the vertical screens mounted at an angle to the flow, see Section 10.2.1.2, with one important exception. The screens travel horizontally in the direction of the fish bypass channel. In operation, fish encountering the screen orient themselves perpendicular to it and attempt to escape. The screens, rotating at much higher speeds than conventional ones, create a strong velocity component parallel to their faces which sweeps the fish into the bypass channel. Fish that do become impinged on horizontal screens are not subject to as great a holding force as that typical to vertical screens and are more likely to free themselves.

Horizontal traveling screens were developed in the Pacific Northwest and have proven very effective in reducing impingement losses. To date their use has been limited to experimental applications as the high degree of component reliability required for commercial introduction has not as yet been demonstrated.

10.2.1.5 LOUVER SYSTEM

The next three systems to be described in Sections 10.2.1.5, 10.2.1.6 and 10.2.1.7 are not intakes but barriers that are placed ahead of conventional intake structures to dissuade fish from entering them. Each utilizes an external stimulus to induce a behavioral response in the fish. The louver system is based on the well demonstrated tendency of fish to avoid abrupt changes in flow direction and velocity.

The principle of the louver behavioral barrier is illustrated in Figure 10.2-3. Louver panels are positioned perpendicular to the water flow and form a line at a sharp angle across the intake entrance channel. As the water flow strikes the barrier, its speed and direction changes. Fish will not willingly pass across such a barrier; instead they orient themselves at right angles to it. The velocity component parallel to the louvers assists in directing the fish to the bypass channel and safely away from the intake.

Incoming water velocity, water level and the size of the fish are critical parameters to the success of the louver system. As such, the design of the barrier is not standardized but must be custom-tailored to each application. Conventional trash bars and screens are required as the louver system performs no debris retention or filtering function.

10.2.1.6 ELECTRIC SCREENS

The use of electricity to influence fish behavior is well known. The electric screen produces a current field which repels fish and can be utilized to prevent their entrance into an intake structure.

An electric fish fence behavioral barrier is shown in Figure 10.2-3. Fish swimming towards the screen are repulsed and retreat. Several attempts to reapproach the barrier may be made before the fish begin to move along the edge of the current field and into the bypass channel.

To date, the electric screen has been utilized primarily for the diversion of upstream migrating fish such as salmon. In this mode, danger of electrocution is reduced because stunned fish will float back downstream rather than pass through the electric field. The employment of electric barriers at power plant intakes would, in most instances, constitute a reversal of this pattern as the fish would be traveling in the flow direction. Fish response to the electric field varies with size and species requiring that the screen voltage and pulse be preselected for a particular age group of a single key species. Electrical effect also depends upon the conductivity of the water which can fluctuate substantially at any one site.

10.2.1.7 BUBBLE, LIGHT AND SOUND BARRIERS

The addition of air bubble, light and sound barriers ahead of intake structures to reduce impingement losses has been attempted with varying degrees of success. In each case the effectiveness of the system depends on the magnitude of the repelling response elicited in the fish.

Air bubble screens are produced by forcibly ejecting compressed air through perforations in a pipe lying along the bottom. Active fish will generally avoid swimming through the curtain of air bubbles; however, lethargic fish (encountered during cold winter water temperatures) often do not respond to the barrier and will passively drift through it.

Light barriers depend on a negative response of fish to visible light. Experiments with light diversion have revealed that fish tend to become acclimated to the light and after several minutes its effectiveness as a barrier is negated.

Although fish can become accustomed to continuous noises, pulsating multi-frequency sound does apparently have a repelling effect. However, the response of fish to sound varies considerably among different species.

10.2.1.8 PERFORATED PIPE

The perforated pipe intake system was originally developed to improve debris removal, but it appears to possess significant fish protection potential. It is one of the simplest intake designs in that trash bars and traveling screens are not required.

A perforated pipe intake system is depicted in Figure 10.2-4. As described in Section 3.4, the entire filtering function of the intake is accomplished by perforated pipes submerged in the waterway several feet above the bottom. In flowing water application, the pipes are positioned parallel to the flow direction so that debris and fish are assisted past the intake by the natural currents. Fish encountering the pipe have clear escape paths in all directions except directly into the perforations. Low approach velocities and internal sleeving to produce uniform velocity fields can be incorporated into the perforated pipe intake design to enhance its fish protection capabilities.

Out of six known installations of perforated pipe inlets in the United States, response to inquiries on operational experience was obtained from five. These have been in satisfactory operation for a period of 3 to 14 years without any serious problems involving algae growth, clogging or fish intake even though they all have a non-uniform velocity inflow through the perforations. Four of these installations have provisions for backwashing (forcing air or water backwards through the perforations to remove adhering debris). In one case this provision has not been used since installation six years ago. In the other three cases, it has been used as necessary without any difficulty.[1]

10.2.1.9 INFILTRATION BEDS

Theoretically, the infiltration bed intake represents the maximum possible protection for fish and floating organisms. Piping buried beneath the

waterway draws water through either natural pervious material or an artificial filter medium. Approach velocities can be made extremely low resulting in zero impingement.

Where suitable water bearing permeable material exists, supply pipes can be inserted into sand and gravel aquifers beneath the water body. These are connected to a central pumping well and are termed radial well intake systems. A level of natural filtering is provided which is far superior to that of mechanical screens and capable of greatly reducing entrainment as well as eliminating impingement.

In waterways lacking sufficiently permeable beds, artificial filtering substrates can be employed. Usually built of concrete or stone, these substrates require an extensive construction effort with attendant impact on benthic life.

10.2.2 ELIMINATION OF IMPRACTICAL ALTERNATIVES

10.2.2.1 HORIZONTAL TRAVELING SCREENS

Although it represents a significant advance in mechanical screening technology with respect to fish protection, the horizontal traveling screen has not proceeded beyond the experimental stage and is still beset by major design problems. Important among these are the need to develop reliable long-life components that can withstand the stresses imposed by the screens' high rotational speeds, the danger of screen collapse due to clogging, the requirement for bypass facilities that can separate fish to be returned to the waterway from debris to be removed and the sensitivity of the screens to water level fluctuations on the order of six feet such as are common in the Clinch River at the Site. For these reasons, the horizontal traveling screen cannot be considered a reasonable alternative for the CRBRP intake system.

10.2.2.2 LOUVER SYSTEM

The louver system is technically feasible at this time. However, certain features of the system render it non-adaptable to the CRBRP Site.

Louver barrier efficiency in reducing impingement losses is highly dependent upon the water velocity through the louvers. This is a function of water level and flow rate. Only small variations in these two parameters can be tolerated. At the Site, the Clinch River regularly experiences six-foot water level differentials on a seasonal basis.

In addition to seasonal fluctuations, daily fluctuations can vary by about three feet at summer operational level to about eight feet during winter operational level. Hourly rate of flow can vary from zero to Melton Hill turbine capacity (approximately 22,000 cfs) at any time during the year. As presently conceived, the louver system could not function successfully under these conditions and does not constitute a viable alternative for the CRBRP intake system.

10.2.2.3 ELECTRIC SCREENS

While it has been shown effective for diverting upstream migrating fish in several cases, the electric screen does not appear practical for use in the CRBRP intake system. No unique or regular migration of a key species is evident in the Clinch River. Selection of the proper voltage and pluse for the screen would be difficult as the river contains a variety of species no one of which is of dominating importance. Because fish entering the intake structure are moving with the flow of water, any that become stunned by the electrical barrier will be drawn directly through it and impinged on the intake screens. Additionally, the electric screen presents a hazard to other wildlife and to humans due to the high voltages used. For these reasons, the electric fish fence cannot be considered a reasonable alternative for the CRBRP intake system.

10.2.2.4 BUBBLE, LIGHT AND SOUND BARRIERS

The success of bubble, light and sound behavioral barriers has been far from dramatic. They have not adequately demonstrated degrees of reliability or effectiveness that would permit their consideration as viable alternatives for the CRBRP intake system.

Of the three types, the air bubble screen has shown the most promise;[2] however, it suffers from an inability to repel fish during the cold winter months. Light barriers have had poor success owing to the rapid acclimation response of fish to them. Sound barriers must be directed at one particular species to be effective. This is not practical for the Clinch River Site.

10.2.2.5 INFILTRATION BEDS

The composition of the Clinch River bottom in the Site vicinity is rock; no permeable material is present that would permit the use of a radial well intake. The employment of an artificial filtering medium would impose a potentially severe construction impact on aquatic life in the river. Additionally, currently operating artificial media have been prone to clogging and cannot guarantee an uninterrupted water supply. Infiltration beds, either natural or artificial, do not, therefore, represent reasonable alternatives for the CRBRP intake system.

10.2.3 SPECIFICATIONS FOR REASONABLE ALTERNATIVES

10.2.3.1 MODIFIED CONVENTIONAL TRAVELING SCREENS

The modified conventional traveling screens intake structure for the CRBRP would be located along the shore of the Clinch River at the position indicated in Figure 10.2-5. The entire facility is approximately 18 feet wide, extends 42 feet back from the shoreline and rises 38 feet above the river bed.

Trash racks, located at the shoreline parallel with the river flow, are 3/8-inch bars at approximately three inch centers. A mechanical trash rake removes impinged debris from the bars and carries it to deck level where it is collected for on-land disposal.

Two traveling water screens, each five feet wide with 3/8-inch square mesh openings, impede any debris which passes through the trash racks. The screens are rotated either on a periodic or continuous basis depending upon the amount of debris impinging the screens.

Debris is washed from the screen at deck level by high pressure sprays, collected in a trough and removed for on-land disposal. Wash water drains back to the river.

Screens are "flush mounted", meaning that the front face of the screen is flush with its supporting wall and parallel with the river flow as shown in Figure 10.2-6. Openings in both outer walls permit fish to escape from the screen face by swimming to the left or to the right. The combined "flush mounted" screens and interior wall openings eliminate the closed end channel which results from placing the screens in a conventional concrete channel.

Maximum approach velocity to the traveling screens, measured at minimum river water level, does not exceed 0.5 feet per second (fps).

Two 100-percent capacity makeup water pumps are located behind the traveling screens in separate bays. The total operating flow of the intake is 10,000 gpm.

10.2.3.2 TRAVELING SCREENS MOUNTED AT ANGLE TO FLOW

The angle-mounted traveling screens intake alternative for the CRBRP is identical in design to the conventional intake with the exceptions indicated in Figure 10.2-7. The portion of the structure containing the

traveling screens and circulating water pumps is positioned at a 45 to 60 degree angle to the flow of incoming water. The fish passages with trash bars utilized in the conventional screens design are replaced with a single escape channel. A fish pump and return pipe connect the escape channel to the river.

Angle-mounting adds approximately 13 feet to the overall length of the structure compared to the modified conventional intake. Operationally, the two systems are the same with the addition of the fish pump for the angle-mounted screen intake.

10.2.3.3 SINGLE ENTRY-DOUBLE EXIT (PASSAVANT) SCREENS

The single entry-double exit (Passavant) screens intake system is illustrated in Figure 10.2-8. It is 2 feet wider and 17 feet longer than the conventional intake and utilizes the same trash bars and rake design.

Two 4.5-foot wide Passavant vertical traveling screens are mounted with their faces parallel to the flow of incoming water. In the back of each screen is an escape channel leading to a collection chamber containing a fish pump and inlet for the return pipe to the river.

10.2.3.4 PERFORATED PIPE

In the perforated pipe inlet design illustrated in Figure 10.2-9, both the trash racks and the traveling screens are replaced by two submerged perforated pipes, positioned approximately 70 feet from shore, parallel to the river flow and supported off the river bottom as shown in Figures 10.2-10 and 10.2-11. Perforations will be 3/8-inch diameter maximum.

Maximum average velocity of entering water measured 0.75 inch from the face of the perforated pipe is estimated to be less than 0.4 fps. Uniform entering velocity is produced by design features noted below.

Fish have a clear escape passage in all directions except directly into the perforations.

Two 100-percent capacity perforated pipes are provided, to permit backwashing one while the other is in operation. Normal maximum inlet water velocity with both inlets in operation will thus be less than 0.2 fps.

Uniform inlet velocity through the perforations is produced by an internal perforated sleeve. Details of the inlet pipe for this specific design concept have been developed through extensive model tests.[3] Water velocity profiles at the point of intake are described in Section 10.2.4.2.2.

Removal of debris from the inlet pipe is accomplished by flow reversal in the intake piping. It is anticipated that because of the low inlet velocities associated with the perforated pipe, backwashing should be an infrequent operation. When backwashing is required, makeup water supply to the plant is interrupted and the water discharged through the plugged perforated pipe.

The pumphouse structure is located near the river bank, similar to the conventional intake design. It is, however, substantially smaller due to elimination of the racks and screens.

10.2.4 ENVIRONMENTAL COSTS

10.2.4.1 ENTRAINMENT

As the intake system draws water from the Clinch River for plant use, certain aquatic organisms in the vicinity of the intake's velocity field and small enough in size to pass through the screens will become entrained in the water supply. These organisms will be primarily composed of floating plankton but will also include (during the spawning season) fish eggs that are not laid in nests or attached to vegetation and larvae.

Numbers of aquatic organisms that become entrained are not principally a function of the intake system. Heat Dissipation System water requirements determine to the largest extent the degree of entrainment. Additionally, the fate of the organisms carried into the plant water supply system is a function of the Heat Dissipation System design. Although survival of some life forms discharged from a once through cooling system does occur, a closed cycle system such as that employed by the CRBRP causes nearly 100 percent entrainment mortality.

The influence of the intake system with reference to entrainment is limited to the effects of its location. An intake that draws water from a region of the waterway that serves as a fish spawning area or is characterized by dense plankton populations will cause an additional amount of entrainment. It is, therefore, important to avoid such unique areas for the intake location.

Tentative location of the CRBRP intake structure is shown in Figure 10.6-5. Although the aquatic monitoring program has yet to be completed, this area of the river does not appear to possess any unique abundance of aquatic life that would disfavor its selection. Entrainment effects may be considered substantially the same for the traveling screens intake options. Due to its off-shore location near the river bottom, the perforated pipe may have a lower level of entrainment (particularly in regard to fish eggs and larvae) associated with its operation. However, the aquatic baseline survey has not proceeded far enough to substantiate this prediction at this point in time.

10.2.4.2 ENTRAPMENT AND IMPINGEMENT

The principal environmental concern that is the direct responsibility of the intake system is entrapment and impingement. Entrapment occurs when dead water areas in which fish can congregate exist within the intake structure (such as behind curtain walls).[4] Impingement refers to the physical attachment of aquatic organisms (primarily fish) on the intake

screens caused by the force exerted by the flowing water. The magnitude of the entrapment and impingement losses that occur is a function of intake water passage design, screen type, water velocity at screen face, velocity distribution along screen cross-section, fish escape features employed and the position of the intake relative to the distribution of fish.

10.2.4.2.1 FISH ESCAPE PASSAGES

Each of the four intake system alternatives utilizes some type of fish escape passage to reduce impingement losses. Further, all of the alternative intakes employ design features such as flush mounted screens to eliminate dead areas that result in fish entrapment.

The modified conventional traveling screen intake has an escape passage located at each end of the screens, as shown in Figure 10.2-6. Fish that enter the intake can, upon approaching the screens, move to either the left or right and proceed into the escape channel and back to the river. These passages, however, are simply openings in the sidewalls of the structure and as such probably function to some degree as secondary water entrance passages with subsequent water flow direction that would oppose the progress of escaping fish.

A single fish escape passage at one end of the screen face is employed with the angle-mounted traveling screen intake as shown in Figure 10.2-7. This passage, however, contains a fish pump to provide a positive force in directing fish away from the screens and back to the river. Angle-mounting is an additional feature of the escape mechanism that produces a velocity component parallel to the screen face to assist fish towards the escape passage.

The single entry-double exit traveling screen utilizes screens positioned with their faces parallel to the water flow and escape passages in the

rear of the screen areas as is illustrated in Figure 10.2-8. Fish entering the intake are not required to change direction to be drawn to safety. The escape passage lies directly in front of the fish as they enter the intake. A fish pump is employed to assist the fish through the escape channel and back to the river. Lethargic (wintering) fish that will not actively respond to currents are more likely to escape impingement with this intake design.

Fish approaching the perforated pipe intake can escape by swimming in any direction except directly into the perforations.

10.2.4.2.2 WATER VELOCITY AT THE SURFACE OF INTAKE SCREEN

One of the most important aspects of the intake system that pertains to impingement is the magnitude and distribution of the water velocity at the surface of the screens. The greater the velocity, the stronger the impingement force, and thus, the more difficult escape from the screen becomes.

There has been considerable effort expended to quantify the relation between fish impingement and screen approach velocity. The results have generally shown that the potential for impingement is significantly reduced when the screen approach velocity does not exceed 0.5 fps.[4] All four of the intake system alternatives are designed for a $\leq$ 0.5 fps approach velocity.

Although a 0.5 fps velocity has been designated, the three vertical traveling screens intake alternatives suffer from the poor velocity distribution that is generally recognized as common to traveling screens.[4] This causes localized regions of the screen face with higher than design approach velocities. Figure 10.2-12 is a velocity profile for a traveling screen similar to that required for the CRBRP. Uneven velocity distribution is evident and the occurrence of equivalent conditions with the CRBRP traveling screen intakes is to be expected.

The perforated pipe alternative utilizes a unique internal sleeve design that produces essentially uniform velocity through all perforations. Extensive model testing has been employed to verify this effect and to optimize the pipe design.[3] Figure 10.2-13 shows the velocity profile of a perforated pipe without internal sleeving. Velocity varies considerably along the screen length rising to as much as 60 percent above the design condition. In Figure 10.2-14, the velocity profile for the perforated pipe with internal sleeve modification is presented. In this case, the design velocity is not exceeded except for a small segment at the screen ends and the velocity field is nearly 100 percent uniform.

Figure 10.2-15 is a graph of approach velocity versus distance from the surface for the perforated pipe intake. It shows that the field of accelerating flow for this intake design does not extend beyond 1/4 inch from the pipe surface. Thus, a fish must pass extremely close to the surface itself to be affected by suction force. As both perforated pipes represent only 0.4 percent of the cross-sectional area of the river at the proposed intake location, the potential for impingement is confined to a very small region of the river.

Two 100-percent capacity pipes are employed by the perforated pipe intake. During normal operation, both will be functioning resulting in a screen approach velocity of less than 0.2 fps.

10.2.4.2.3 FISH RESOURCES IN CLINCH RIVER

The degree to which consideration is given to intake systems that provide extensive fish protection features is to a certain extent a function of the significance of the fish resources of the waterway. An important game or commercial fish production area or residence of a unique or rare and endangered fish species should quite naturally receive greater attention in reference to intake design than a water body for which no such conditions exist.

Although the aquatic baseline survey program is still in progress, several general remarks concerning the fish resource of the Clinch River at the Site can be made. Only two game fish species are well represented, the sauger and white bass. Forage and rough fish dominate in both numbers and biomass.[5] Although Watts Bar Reservoir produced a commercial fish harvest of nearly 95,000 pounds in 1973, catches within a 10-mile radius of the Site amounted to only one percent of this total.[6] No unique or rare and endangered fish species inhabit this portion of the Clinch River, as discussed in Section 2.7.

10.2.4.3 CONSTRUCTION EFFECTS

Construction of the CRBRP intake system will cause temporary dislocation of some aquatic life and produce potential silt and turbidity additions to the river. Specific practices and techniques employed to minimize the construction impact are examined in Section 4.1.

The three traveling screen intake alternatives are similar in design and will have essentially identical construction effects. Although substantially different in design, the perforated pipe intake should not cause a construction impact dissimilar to the other three as the additional adverse effect of installing the submerged pipes will be balanced by the smaller amount of work required at the shoreline for the perforated pipe pumphouse. Consequently, none of the intake system alternatives offers any significant decrease in construction impact.

10.2.4.4 AESTHETIC IMPACT OF INTAKE STRUCTURE

At present the portion of the Clinch River in the vicinity of the intake location may be characterized as a natural setting. The shoreline is relatively undisturbed. As such, the CRBRP intake structure represents an aesthetic intrusion, although its individual impact will be lessened by the presence of the plant itself.

The three traveling screen intake alternatives will present large, open concrete structures rising from the river bed at the shoreline. Their aesthetic impact will be considerable with the angle-mounted screens intake the most imposing due to its angled posture.

The perforated pipe intake will present the least visual impact of the intake alternatives. The pipes themselves will be submerged and hidden from view. The only visible structure will be the enclosed pumphouse along the shoreline which is much smaller than the other three intake structures.

10.2.5 ECONOMIC COSTS

Monetary costs (capital and operating) for the CRBRP intake system alternatives are presented in Table 10.2-1. Due to its simple design which eliminates the need for trash rakes and traveling screens and subsequent large shoreline structure, the perforated pipe intake is the lowest cost alternative as shown in Table 10.2-1. The modified conventional traveling screens intake is nearly two and one-half times as costly and the angle-mounted and single entry-double exit traveling screens intakes are approximately three and four times, respectively, the cost of the perforated pipe alternative.

There are fewer moving parts associated with the perforated pipe and no debris disposal is required. System maintainability for the four alternatives will be influenced by the presence of Asiatic clams in the Clinch River; however, no significant differences among the system designs would be anticipated.

10.2.6 COMPARISON OF ALTERNATIVES

10.2.6.1 DIRECT COMPARISON OF ALL REASONABLE ALTERNATIVES

A comparative summary of the economic and environmental costs for the four CRBRP intake alternatives is presented in Table 10.2-2. The results indicate that the perforated pipe intake is the economically preferable system and for two environmental costs, entrainment and construction effects, the four alternatives are equivalent. Therefore, the benefit-cost analysis revolves about a balancing of fish impingement and aesthetics against the economic costs.

Significance of fish impingement is determined by the impact such losses might have on the natural populations in the Clinch River in the vicinity of the Site. Quantification requires information concerning the numbers and distribution of the important fish species in the river. As previously noted, the aquatic baseline survey program is still in progress and this data is not currently available. Consequently, pounds of fish impinged per unit time and, more importantly, the impact of this effect on the local fish populations cannot be definitively determined at this time. However, a qualitative estimate of impingement significance can be made based on the analysis of environmental costs presented in 10.2.4.

The intake system chosen for the CRBRP should be designed to reduce fish mortality to that degree consistent with the value of the fish resource of the river and the constraints of economics. These constraints dictate that the additional monetary cost incurred by the employment of an intake system equipped with extensive fish protection features be matched by an equivalent reduction in its environmental cost. In view of this, the modified conventional traveling screens intake alternative is eliminated from further consideration because of its failure to produce environmental improvement in proportion to its higher monetary costs (in comparison to the base case perforated pipe intake). In fact, in terms of

the effectiveness of its fish escape features, the conventional intake is the least desirable alternative.

Three remaining alternative systems each offer certain advantages and limitations in reference to impingement effects. The angle-mounted traveling screens intake produces a velocity vector parallel to the screen face to assist fish into the escape passages; however, a positive swimming response by the fish is required. The single entry-double exit traveling screens intake employs escape passages directly in the path of fish entering the intake; therefore, no swimming response is needed. Both of these intakes utilize fish pumps to transfer fish to safety, but the velocity distribution across the screen faces is non-uniform and subject to local regions of higher than desired speeds. The perforated pipe alternatives requires fish approaching the intake to swim away to escape; however, the escape field is very large (all directions except directly into the perforations) and the intake field of accelerating flow is very small (extending only 0.25 inch above the pipe surface).

Comparing these three intake systems, the above enumerated features tend to balance one another resulting in fish impingement losses that should not substantially differ among the alternatives. Of the three, the single entry-double exit intake is potentially the most effective in reducing impingement due to its capability to better protect lethargic (wintering) fish. The angle-mounted traveling screens and perforated pipe intakes can be considered approximately equal with the fish pump and screen angle features of the angle to flow intake balanced by the superior approach velocity characteristics of the perforated pipe. When the monetary cost differential and aesthetic impact are considered, the perforated pipe intake is preferable overall to the angle-mounted traveling screens.

The foregoing analyses have now reduced the number of competing alternatives to the single entry-double exit traveling screens and perforated pipe. The traveling screens intake possesses a small advantage in fish

protection but is considerably more costly economically and is less desirable aesthetically. In view of the nature of the fish resource of the Clinch River near the Site as described in Secion 10.2.4.2.3, the impingement reduction advantage offered by the single entry-double exit intake fails to outweigh its burden of economic and aesthetic costs.

10.2.6.2 REASONS FOR SELECTION OF CHOSEN SYSTEM

The perforated pipe intake system has been selected for the CRBRP. It offers the advantages of a simple design that eliminates the need for costly trash rakes and traveling screens, a unique internal sleeve modification to produce very desirable approach velocity characteristics that provide significant protection against fish impingement, a small enclosed shoreline structure that reduces the aesthetic impact associated with conventional intakes and no debris disposal requirements.

TABLE 10.2-1

ECONOMIC COSTS FOR INTAKE ALTERNATIVES

	Conventional Traveling Screens	Angle-Mounted Traveling Screens	Single Entry Double Exit Traveling Screens	Perforated Pipe
Substructure	$ 81,000	$117,000	$174,000	BASE
Superstructure	22,000	BASE	6,000	2,000
Trash Rake	24,000	24,000	24,000	NA*
Traveling Screen	48,000	48,000	60,000	NA*
Perforated Pipe	NA*	NA*	NA*	46,000
CAPITAL COST DIFFERENTIAL	$127,000	$141,000	$216,000	BASE
EQUIVALENT INVESTMENT OPERATING COST DIFFERENTIAL	1,000	1,000	1,000	BASE
TOTAL DIFFERENTIAL COST	$128,000	$142,000	$217,000	BASE

*Not applicable

TABLE 10.2-2

SUMMARY OF ENVIRONMENTAL AND ECONOMIC COSTS
FOR INTAKE ALTERNATIVES

	Conventional Traveling Screens	Angle-Mounted Traveling Screens	Single Entry Double Exit Traveling Screens	Perforated Pipe
Environmental Costs				
Entrainment	Same	Same	Same	Same
Impingement				
Fish escape passages	Fair	Good	Excellent	Good
Water velocity at screens	0.5 fps @ 1.0 inch	0.5 fps @ 1.0 inch	0.5 fps @ 1.0 inch	0.2 fps @ 0.75 inch*
Velocity distribution	Poor	Poor	Poor	Excellent
Construction Effects	Same	Same	Same	Same
Aesthetic Impact	Considerable	Considerable	Considerable	Moderate
Economic Costs				
Monetary Costs ($)	127,000	141,000	216,000	Base
Maintainability	Same	Same	Same	Same

*With both pipes operating

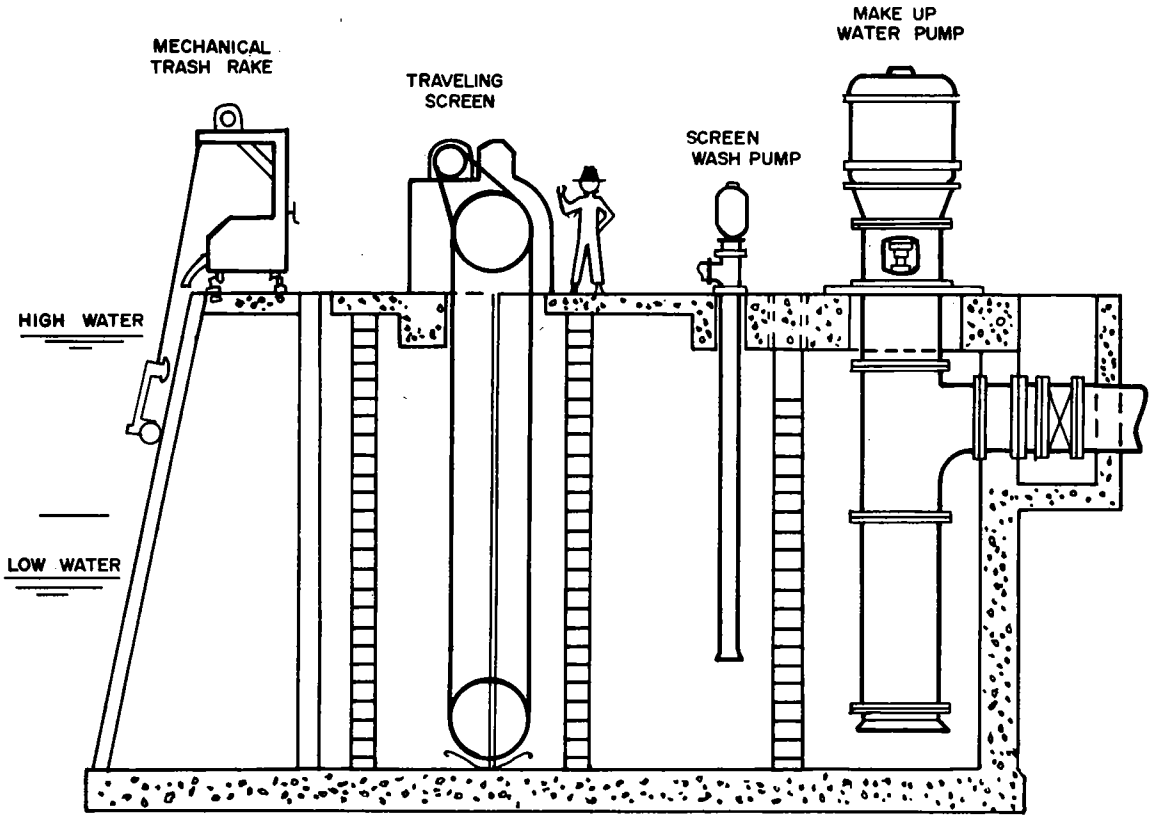

Figure 10.2-1 CONVENTIONAL TRAVELING SCREENS INTAKE STRUCTURE

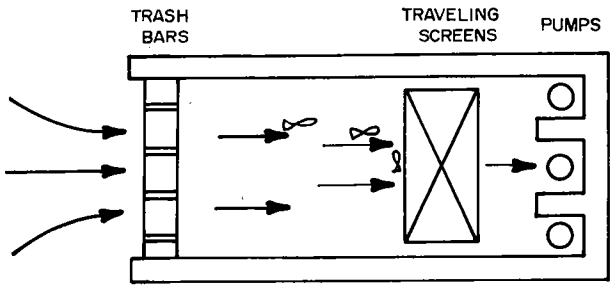

Conventional Traveling Screens

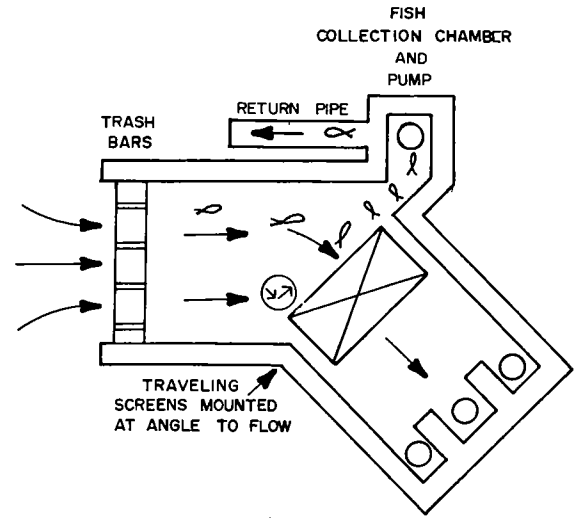

Traveling Screens
Mounted at Angle to Flow

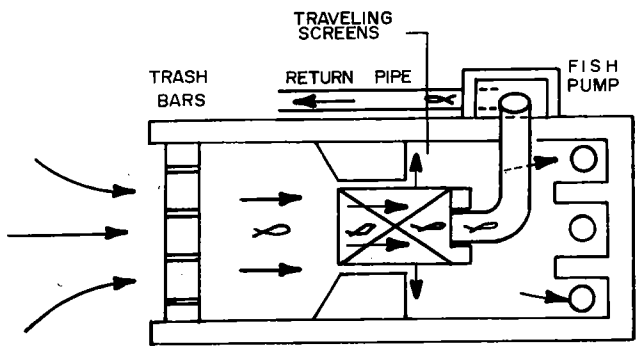

Single Entry-Double Exit Screens

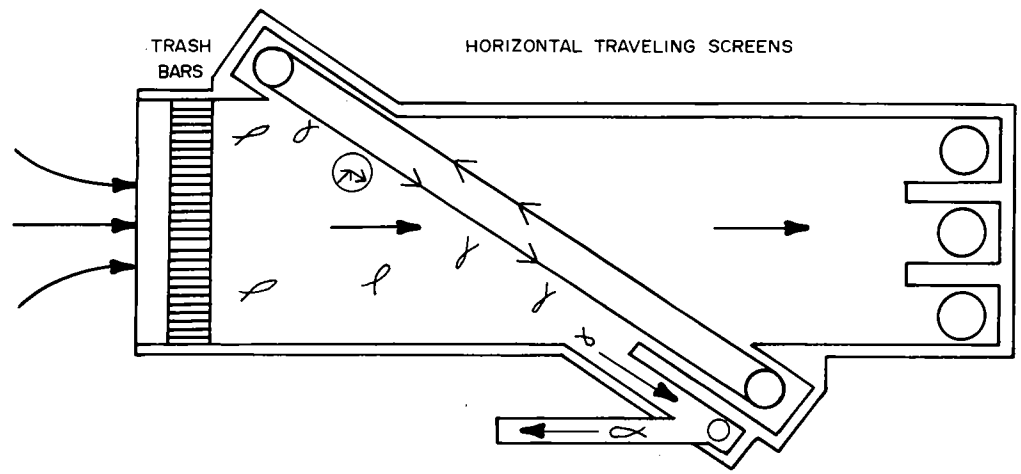

Horizontal Traveling Screens

Figure 10.2-2 FISH PROTECTION FEATURES OF TRAVELING SCREENS INTAKE ALTERNATIVES

LOUVER BARRIER

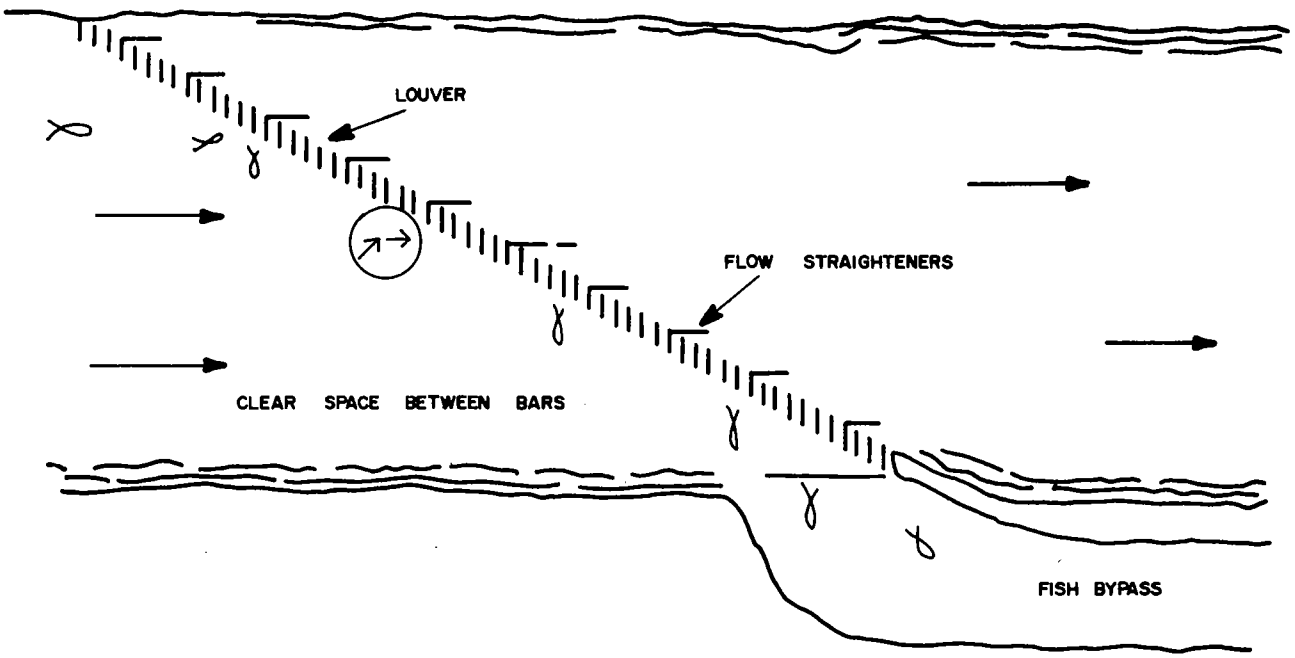

ELECTRIC FISH FENCE

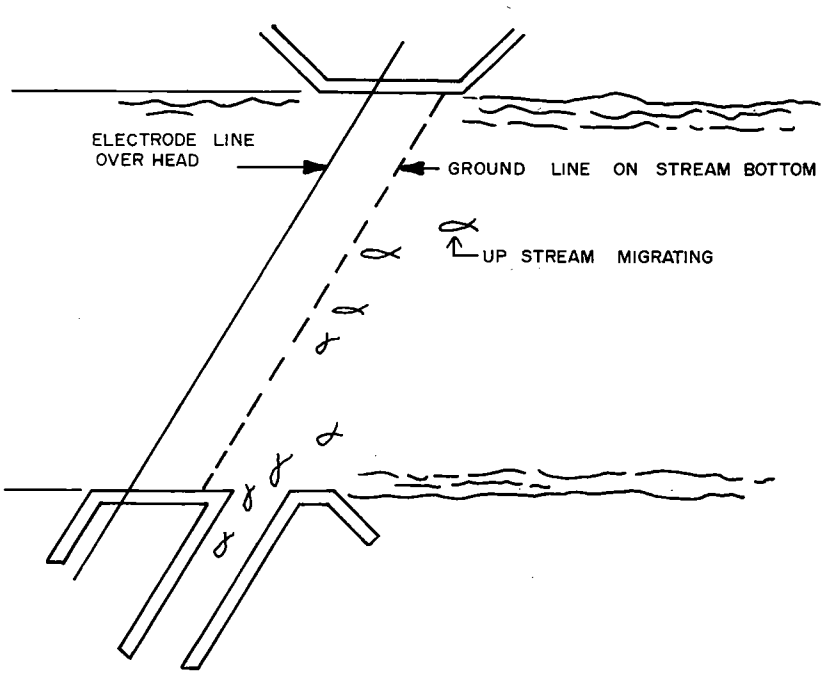

Figure 10.2-3 BEHAVORIAL BARRIERS

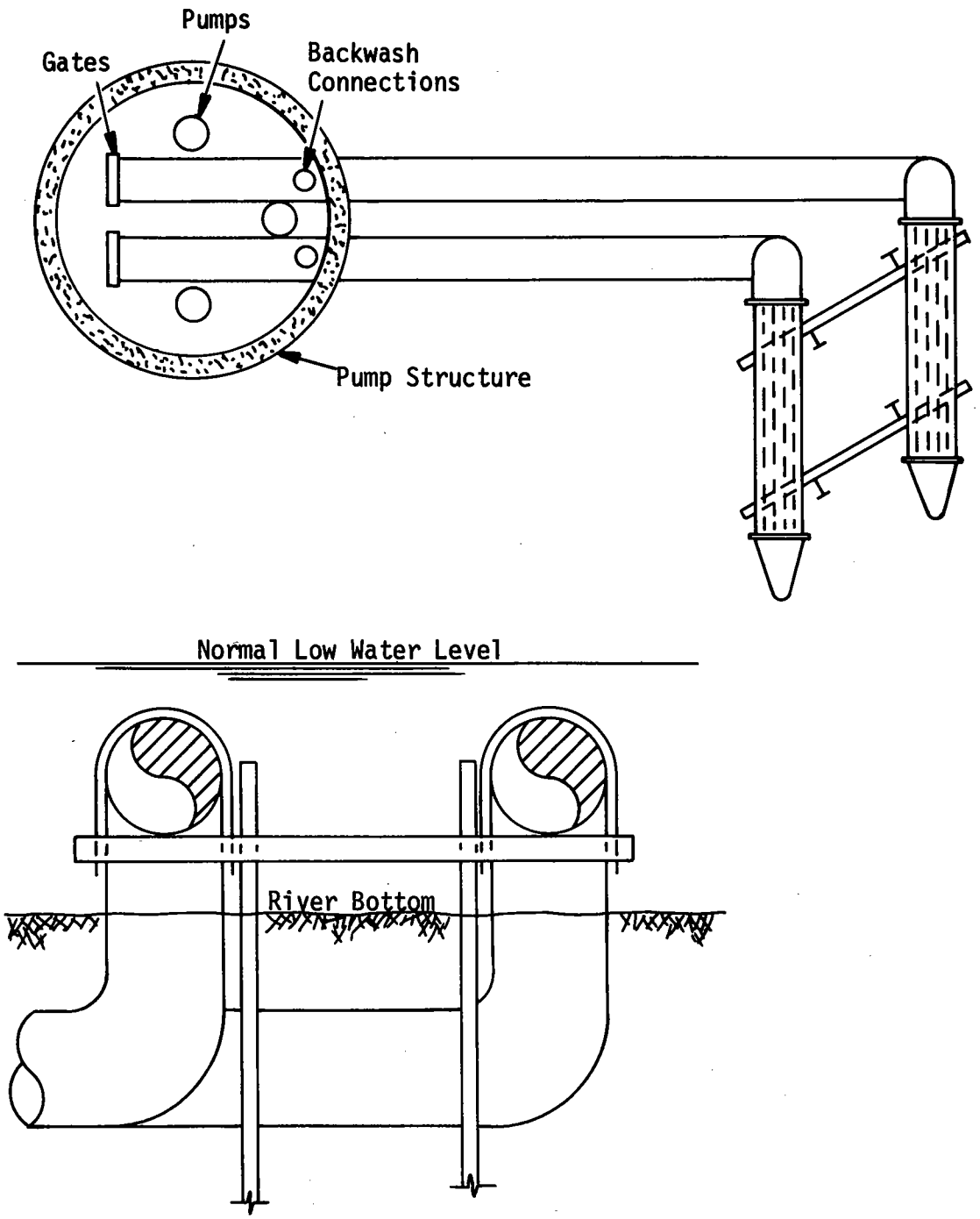

Figure 10.2-4 PERFORATED PIPE INTAKE SYSTEM

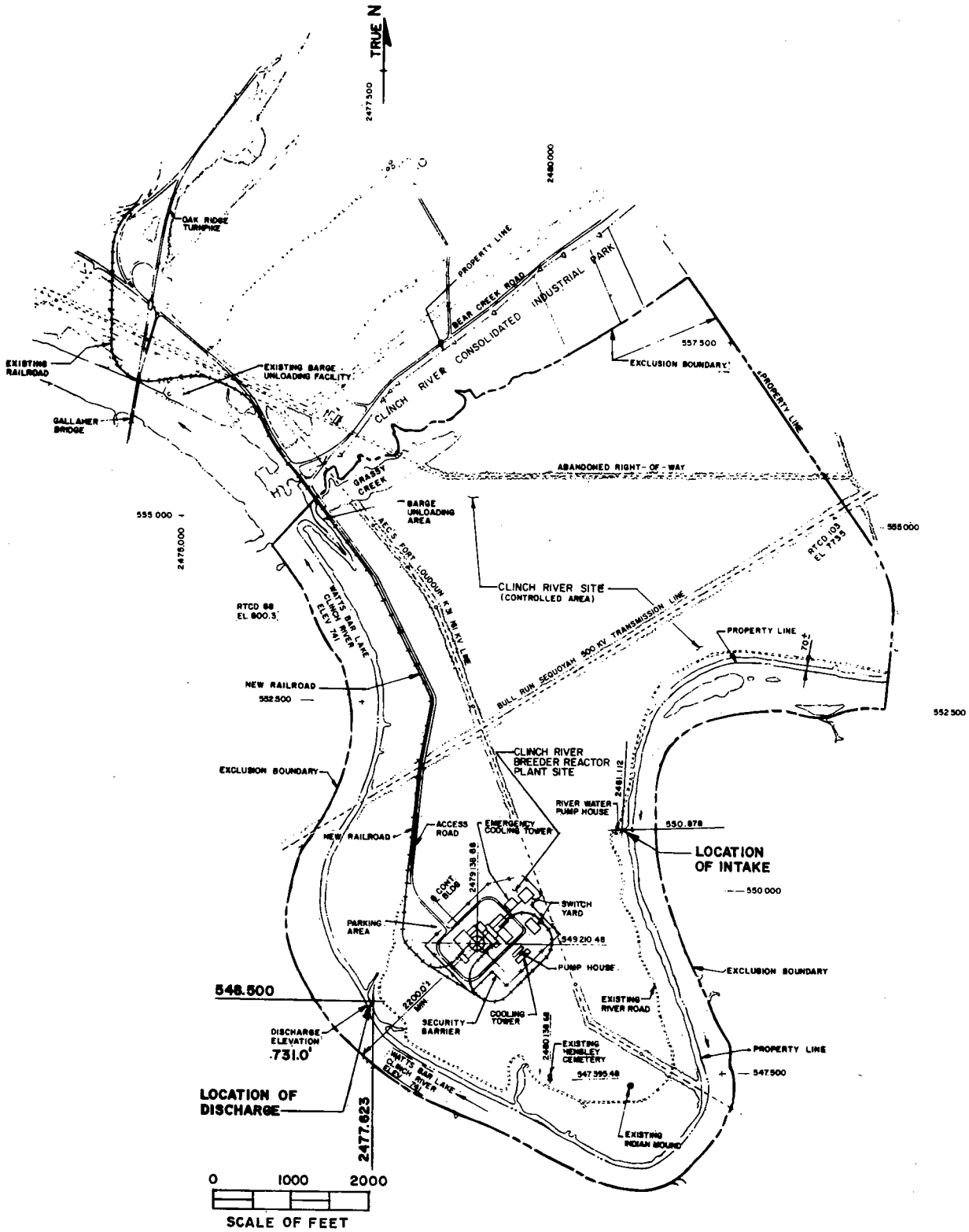

Figure 10.2-5 LOCATION OF CRBRP INTAKE

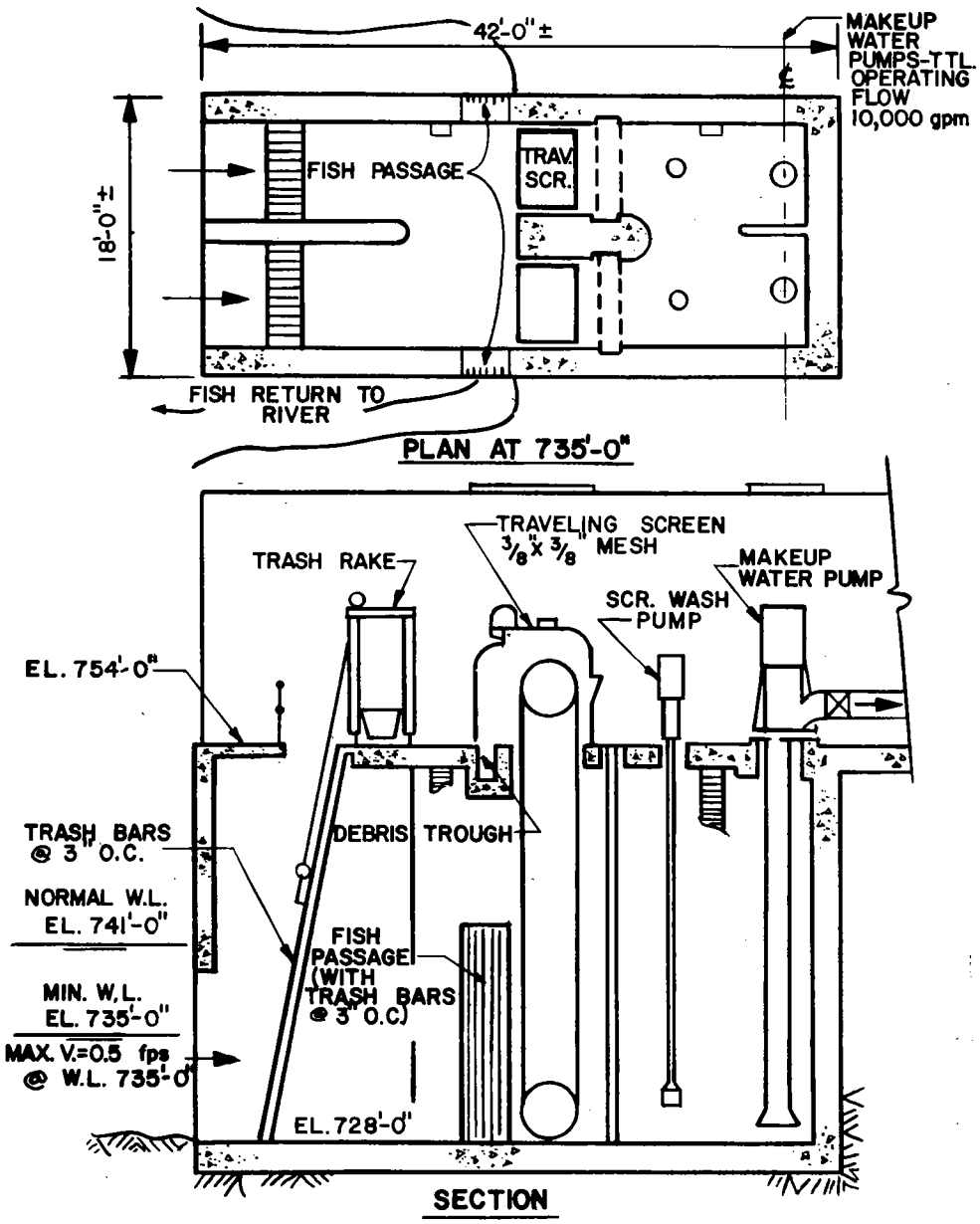

Figure 10.2-6 CONVENTIONAL TRAVELING SCREENS INTAKE SYSTEM

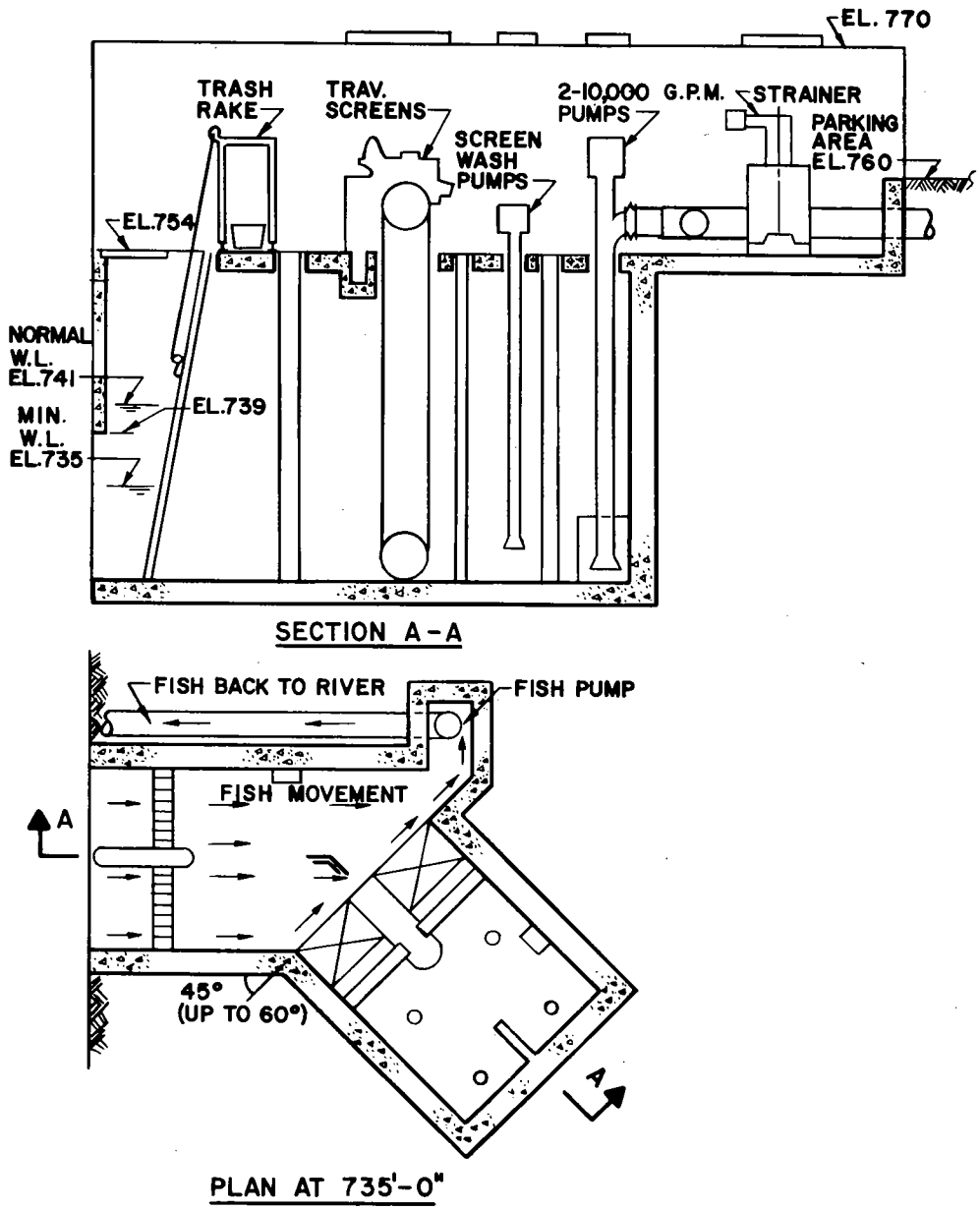

Figure 10.2-7 TRAVELING SCREENS MOUNTED AT ANGLE TO FLOW

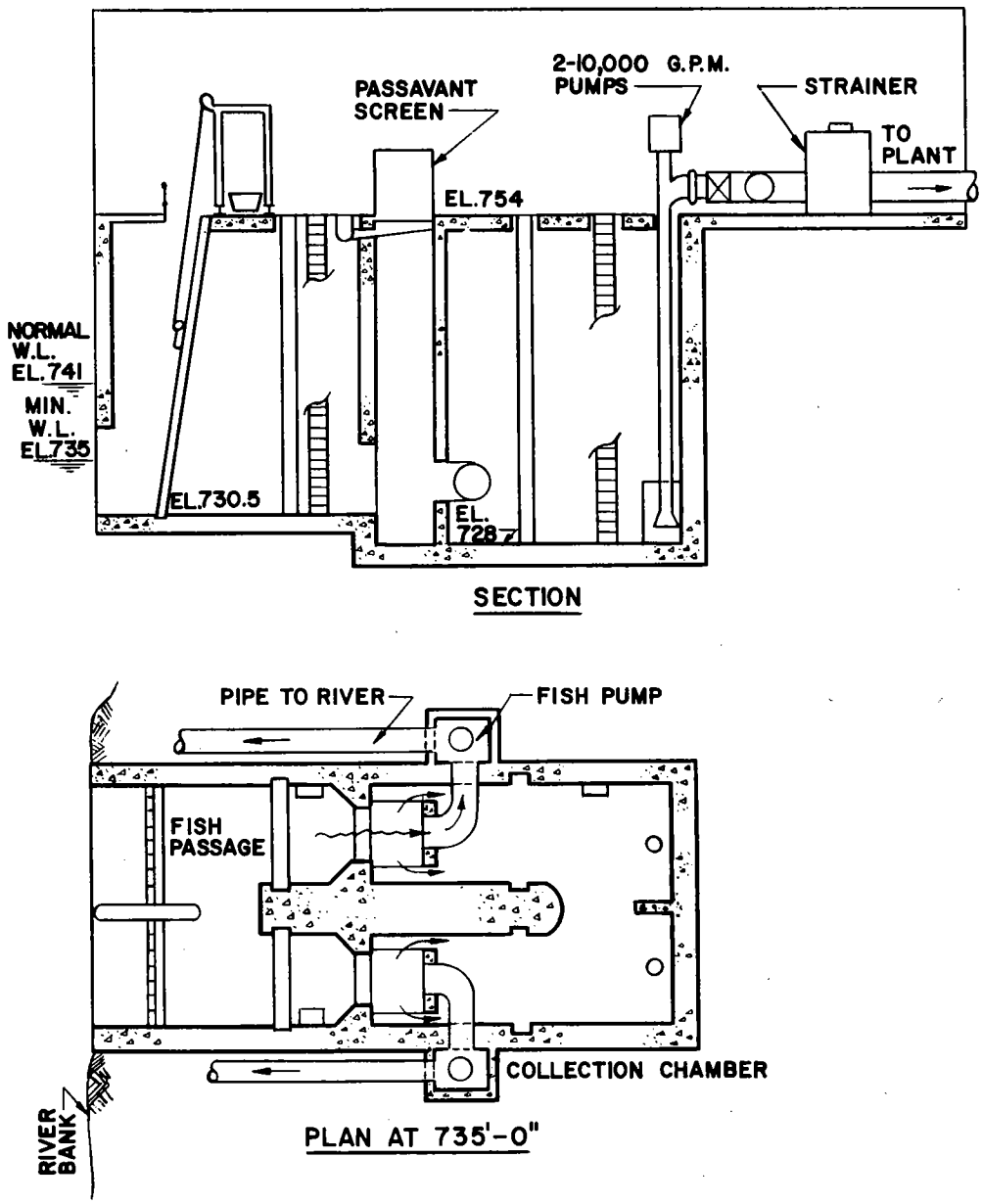

Figure 10.2-8 SINGLE ENTRY-DOUBLE EXIT (PASSAVANT) SCREENS

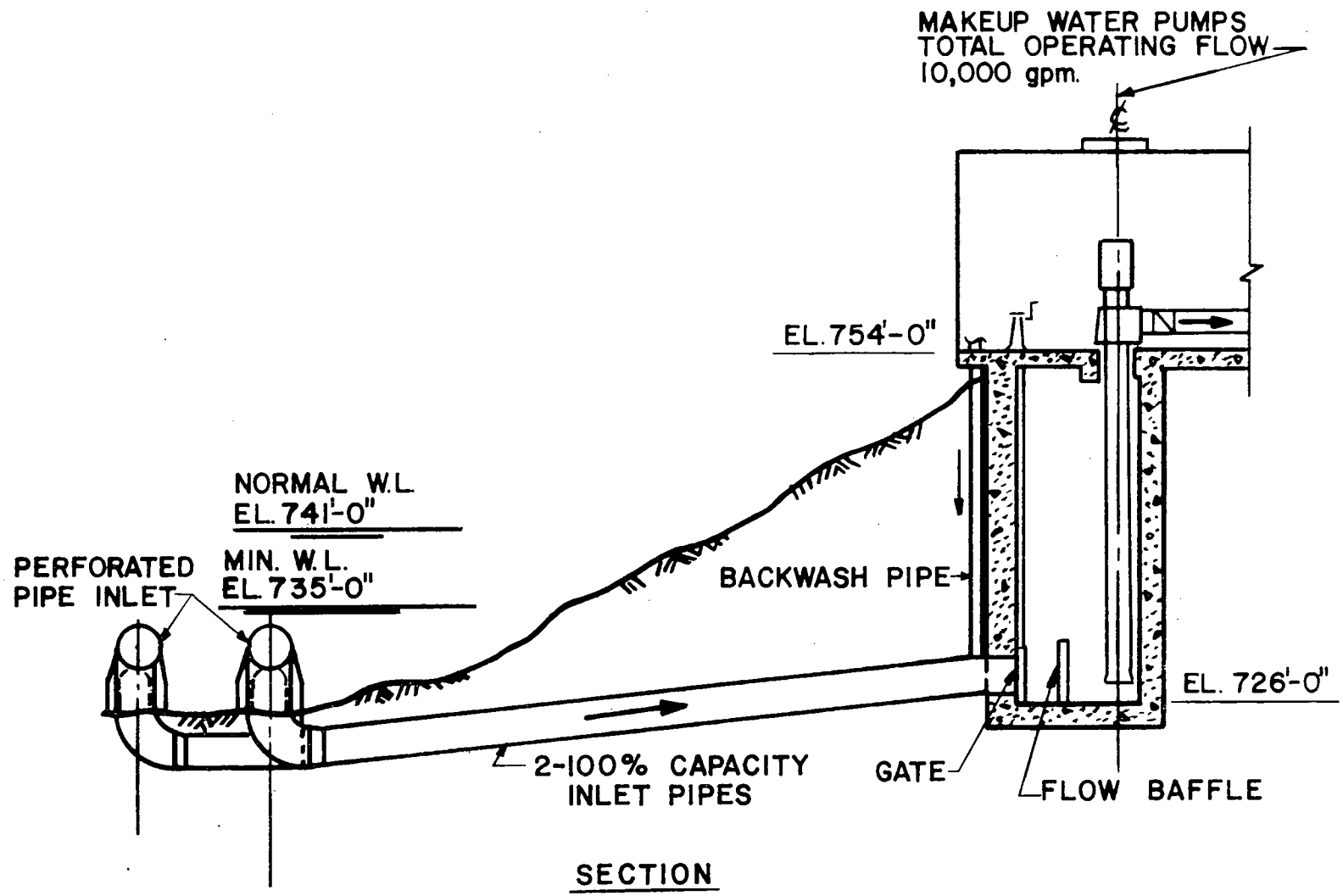

Figure 10.2-9 PERFORATED PIPE INTAKE SYSTEM

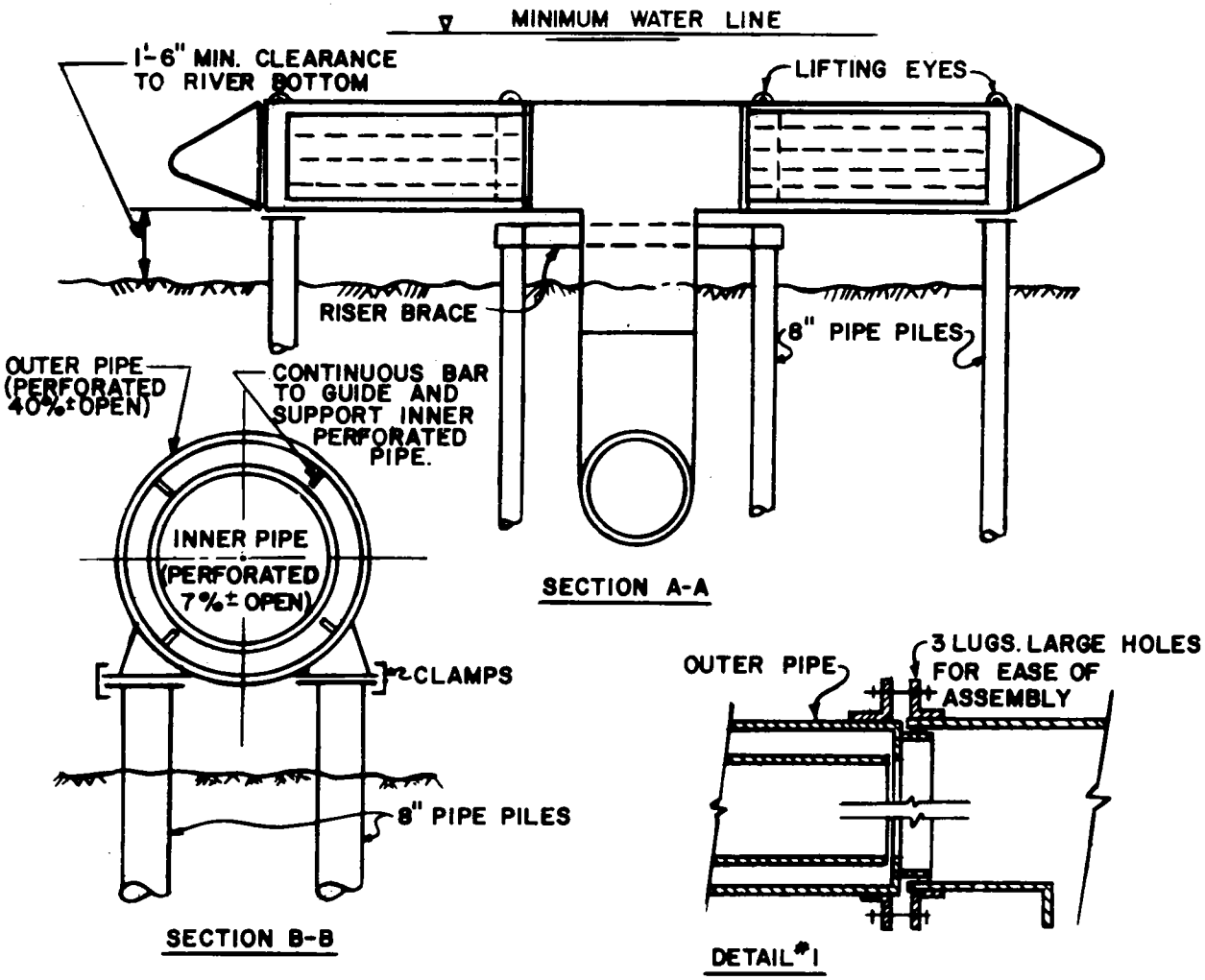

Figure 10.2-10 PERFORATED PIPE SUPPORTING FRAMEWORK

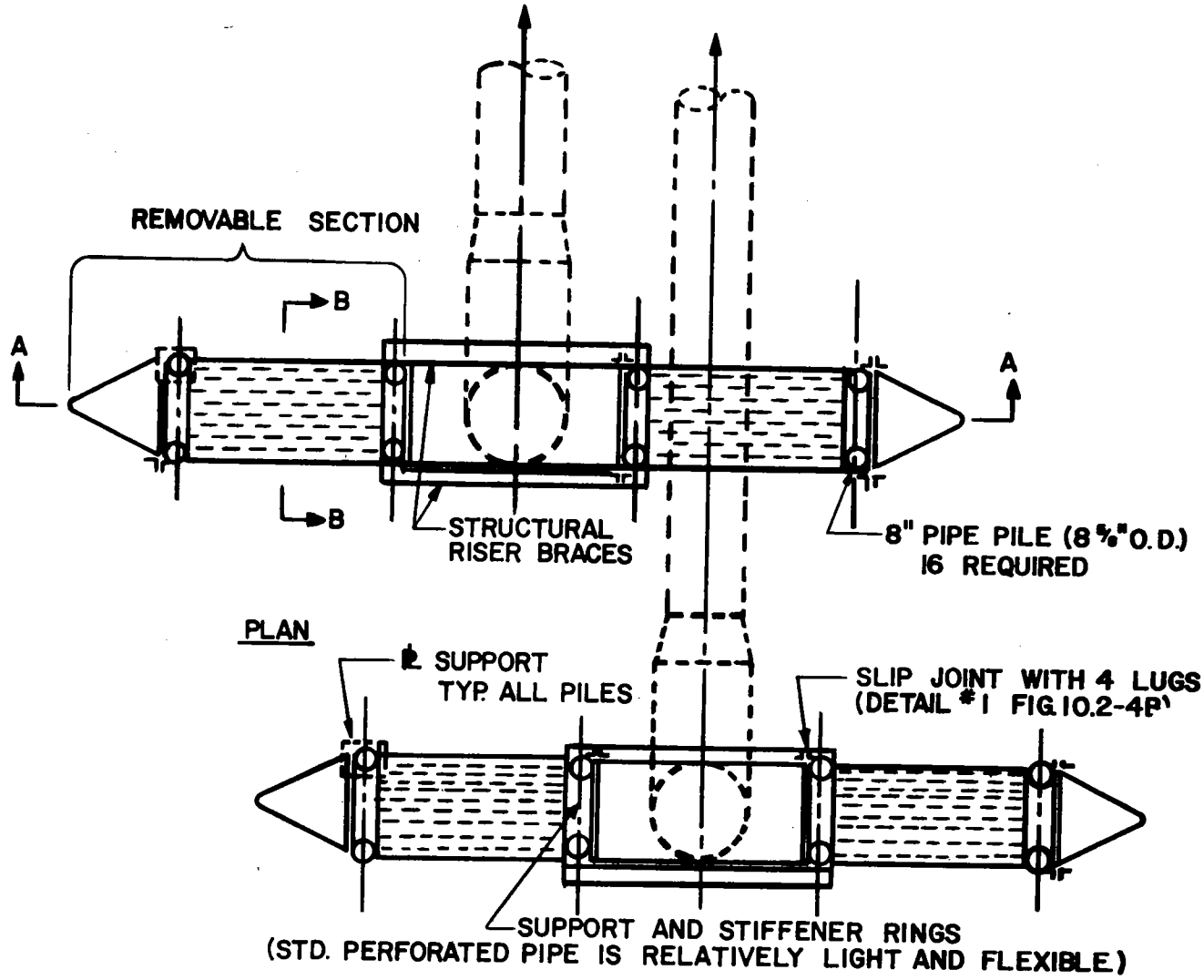

Figure 10.2-11 PERFORATED PIPE CONNECTIONS TO PUMPHOUSE

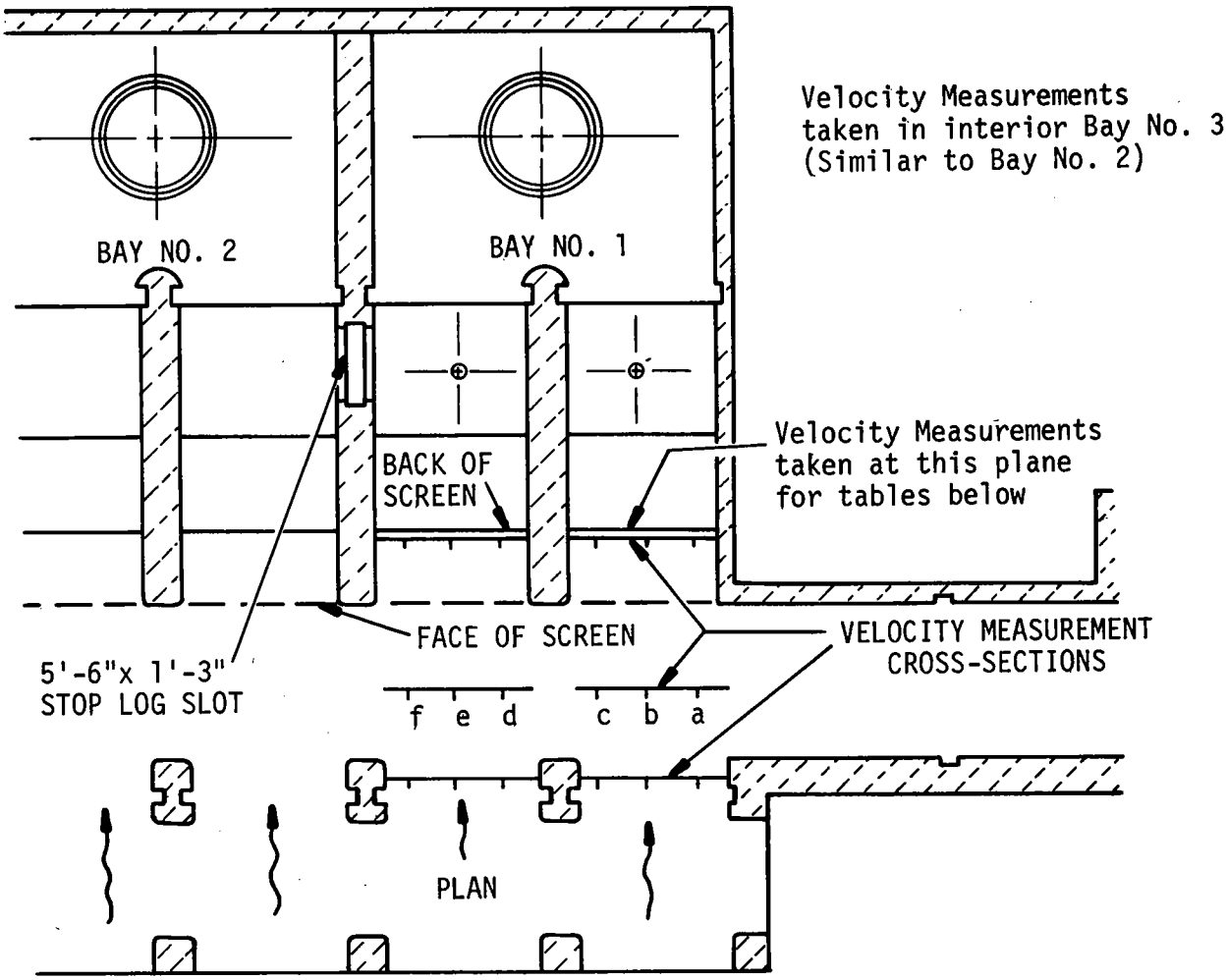

Pumps 1, 2 and 3 in operation; 0.5 ft/sec river

	(a)	(b)	(c)	(d)	(e)	(f)
Near Bottom	0.96 ↑	0.97 ↑	0.92 ↑	0.77 ↑	0.84 ↑	0.42 ↑
Mid-Depth	0.95 ↑	1.04 ↑	1.06 ↑	0.87 ↑	0.84 ↑	0.76 ↑
Near Surface	0.96 ↑	0.94 ↑	0.86 ↑	0.82 ↑	0.79 ↑	0.65 ↑

Pumps 1, 2 and 3 in operation; 2 ft/sec river

	(a)	(b)	(c)	(d)	(e)	(f)
Near Bottom	0.68 ↑	0.84 ↑	0.80 ↑	0.60 ↑	0.74 ↑	0.67 ↑
Mid-Depth	0.80 ↑	0.95 ↑	1.06 ↑	0.67 ↑	0.80 ↑	0.81 ↑
Near Surface	1.20 ↑	1.01 ↑	0.47 ↑	0.63 ↑	0.63 ↑	(nil) ↑

Figure 10.2-12 TRAVELING SCREEN VELOCITY PROFILE[7]

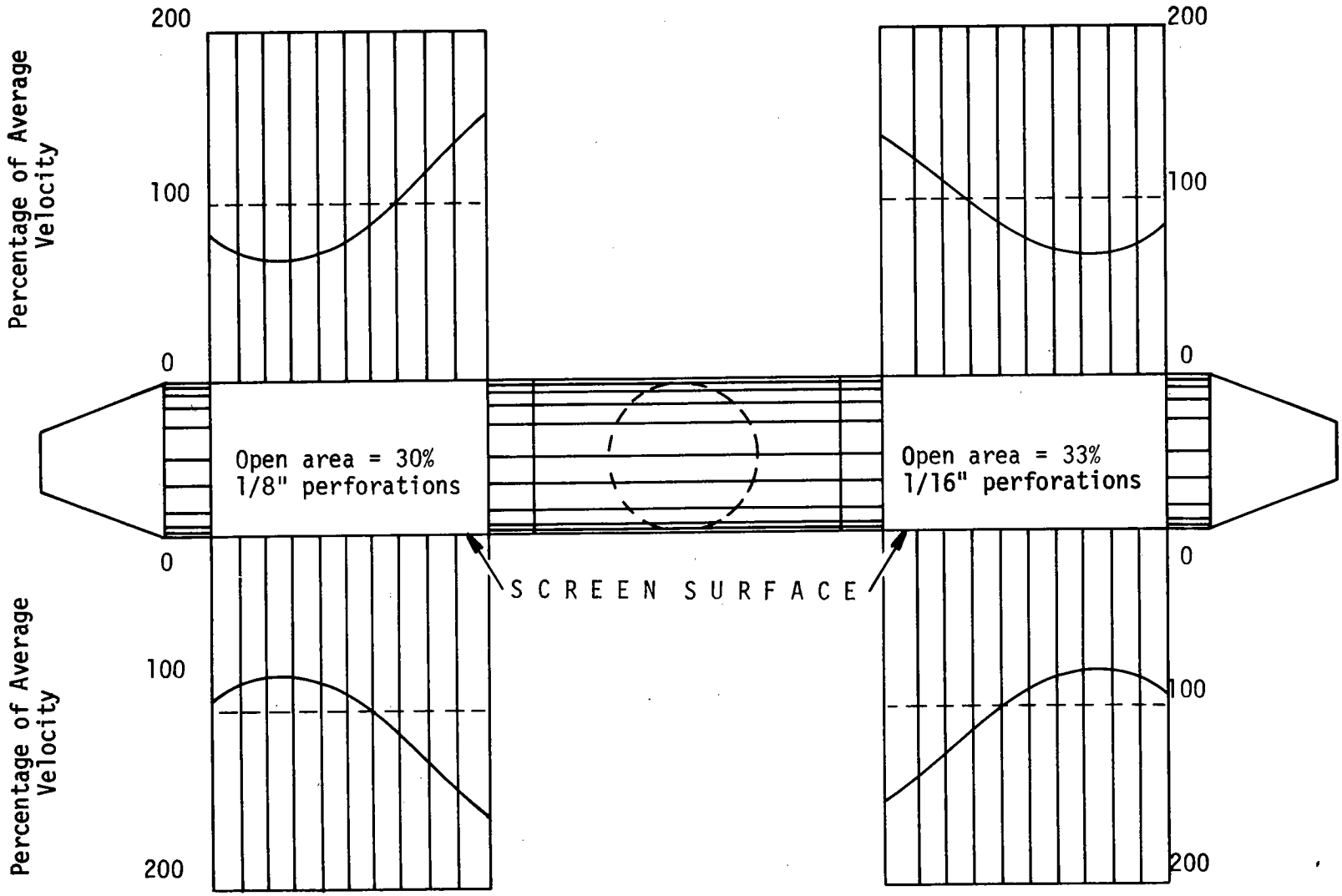

Figure 10.2-13 VELOCITY PROFILE ALONG PERFORATED PIPE WITHOUT INTERNAL SLEEVE[3]

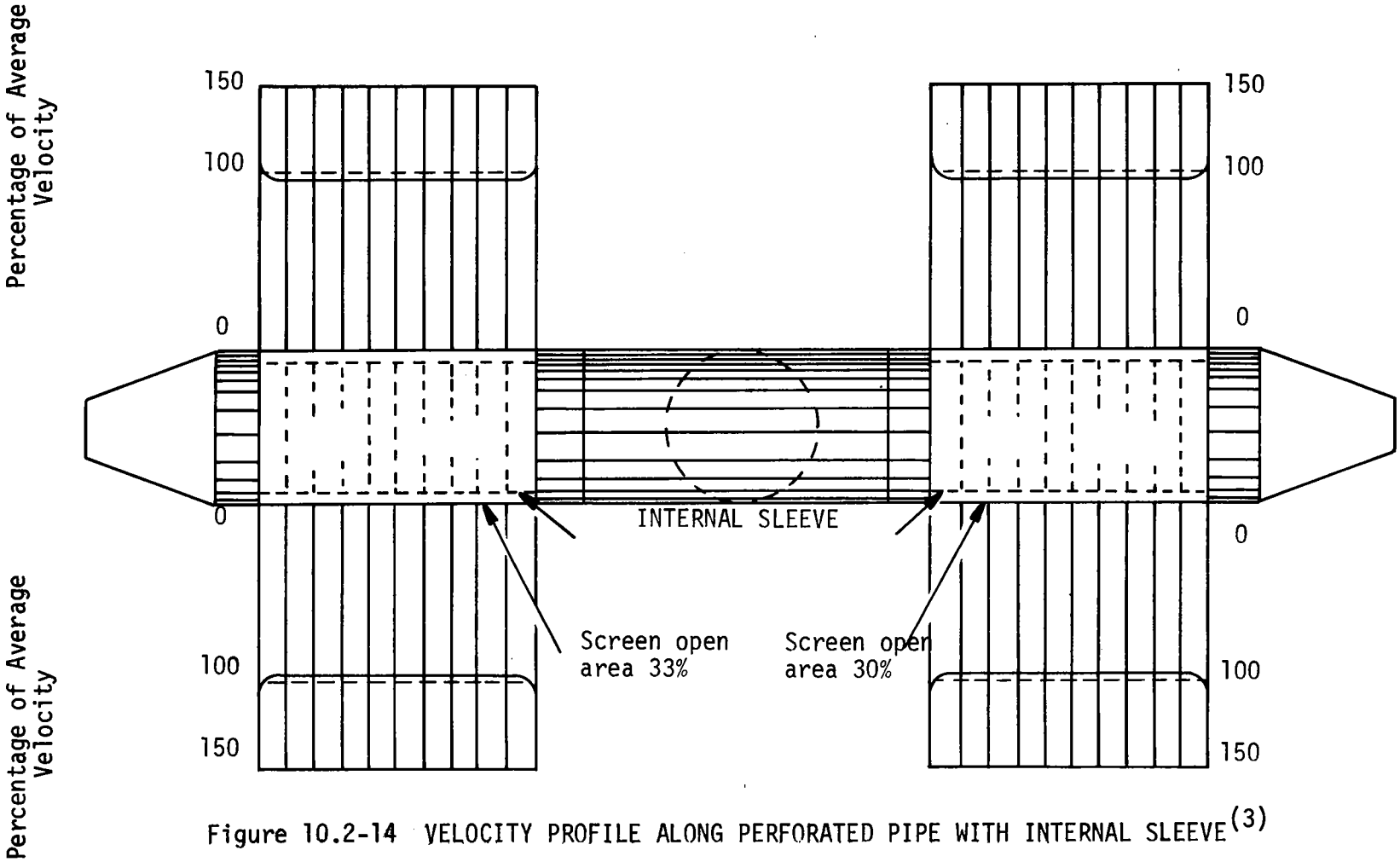

Figure 10.2-14 VELOCITY PROFILE ALONG PERFORATED PIPE WITH INTERNAL SLEEVE[3]

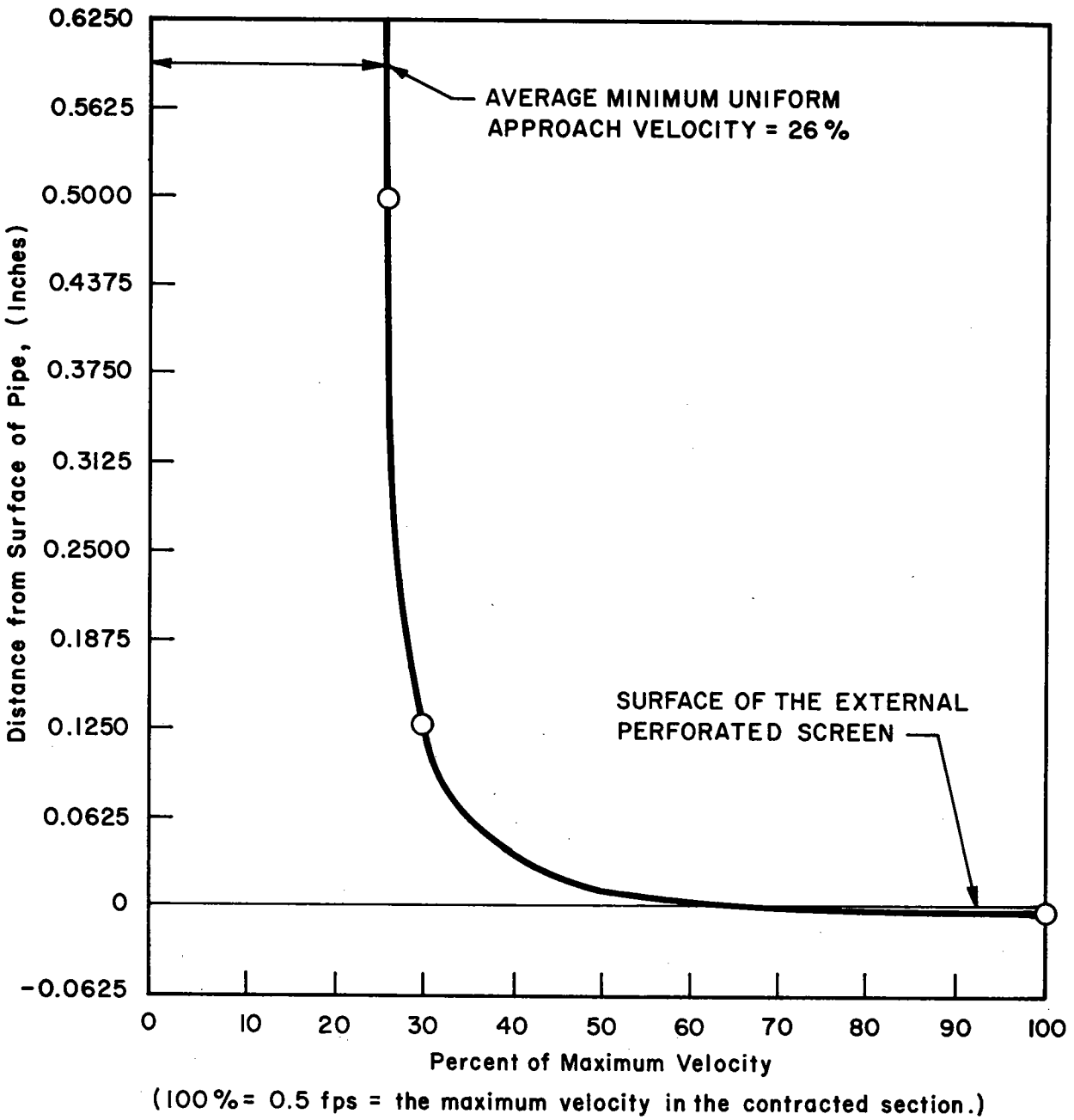

Figure 10.2-15 APPROACH VELOCITY VERSUS DISTANCE FROM SURFACE OF A PERFORATED PIPE[3]

10.3 DISCHARGE SYSTEM

The discharge system is the mechanism for release of all CRBRP effluent streams that are scheduled for final disposal in the Clinch River. (Storm water discharge is the single exception - see Section 10.4). Major flows to the discharge system include cooling tower blowdown, treated regeneration wastewater and the sanitary system effluent. It is the function of the discharge system to provide for the integration of the plant discharge into the main body of the Clinch River. Location of the discharge structure is shown in Figure 10.3-1.

Flow quantities and thermal and chemical composition of the CRBRP discharge are presented in Sections 3.4, 3.6 and 3.7. Summarizing, the discharge may be characterized as similar to Clinch River water with major points of difference being elevated temperature (74°F in winter to 90°F in summer) and concentrated chemical composition (by a factor of 2.5). The discharge flow is an average of 2,300 gpm in winter and 3,100 gpm in summer. During periods following intermittent loadings, the discharge will contain residual chlorine. Suspended solids levels are generally lower than the ambient concentrations typical of the Clinch River.

In an environmental sense, the primary concern associated with the discharge system is the degree to which it promotes rapid and thorough mixing of the plant effluent with the river. The mixing zone, its extent and effect on river water quality and aquatic life, is predominantly the responsibility of the discharge system. The ultimate effects of the thermal and chemical properties of the effluent are beyond the control of the discharge system and constitute the provinces of the specific plant systems responsible for those properties (thermal characteristics -- cooling system, chlorine residual -- biocide system, etc.). These effects are addressed, as appropriate in Sections 10.1, 10.4, 10.5 and 10.6. Discharges from the CRBRP must comply with applicable State

permits relating to the size of the mixing zone. Further, the selected discharge system should reflect the desired goal of reducing adverse environmental impact to that level consistent with the economic constraints of diminishing returns.

The discharge system selected for the CRBRP is a high momentum submerged single port discharge.

Alternatives considered for the discharge system are:

1. Low momentum surface discharge;
2. High momentum submerged single port discharge; and
3. High momentum submerged multiport discharge.

10.3.1 DESCRIPTION OF ALTERNATIVES

10.3.1.1 SURFACE DISCHARGE

Surface discharge is the simplest and most economically attractive discharge system. The plant effluent is transported via a canal or pipe to the shoreline where merger with the water body is accomplished by an open trough. An environmental disadvantage of surface discharge for power plant applications is the potential for the heated effluent to float out over the surface of the waterway, its buoyant properties causing retardation of mixing action.

10.3.1.2 SUBMERGED DISCHARGE

An environmentally desirable alternative to the surface discharge that promotes more rapid and thorough mixing is the submerged discharge. The submerged discharge is designed to provide higher exit velocities than the surface discharge. The opportunity for the formation of an

extensive floating layer of heated water is substantially reduced because significant mixing, fostered by the higher discharge velocity, is initiated below the river surface.

A submerged discharge may utilize either a single exit nozzle or any arrangement and number of individual nozzles in a multiport design. Nozzles may be arrayed for cross-flow or co-flow mixing.

10.3.2 ELIMINATION OF IMPRACTICAL ALTERNATIVES

All of the alternative discharge systems are technically and economically viable. Additionally, all are adaptable for use at the Site.

10.3.3 SPECIFICATIONS FOR REASONABLE ALTERNATIVES

10.3.3.1 LOW MOMENTUM SURFACE DISCHARGE

The surface discharge alternative for the CRBRP is depicted in Figure 10.3-2. A buried pipe transports the plant effluent stream to the river's edge where it emerges into a "V"-shaped open trough discharge structure positioned at 735 feet MSL.

10.3.3.2 HIGH MOMENTUM SUBMERGED SINGLE PORT DISCHARGE

Design of the submerged single port discharge system is illustrated in Figure 10.3-3. The plant effluent flows through a 12-inch diameter buried pipe which culminates in an 8-inch diameter exit nozzle. Based on studies performed at the Site, a submerged discharge depth of four feet below the minimum water level of 735 MSL was selected. Deeper locations are not considered feasible due to the extensive piping into the river traffic channel that would be required. The exit nozzle is oriented for cross-flow mixing. Co-flow mixing is not advisable as the Clinch River vacillates considerably from unidirectional flow as indicated in Section 2.5.

10.3.3.3 HIGH MOMENTUM SUBMERGED MULTIPORT DISCHARGE

The submerged multiport discharge alternative employs four exit nozzles as shown in Figure 10.3-4. Piping from the plant and discharge depth are identical to that for the single port system. However, the supply pipe is oriented parallel to the river so that the perpendicularly mounted exit nozzles produce cross-flow mixing. The nozzles are 4-inch diameter extensions to the supply pipe and are equally spaced at three foot intervals.

10.3.4 ENVIRONMENTAL COSTS

Mixing effectiveness is the primary environmental concern associated with the discharge system. Additional considerations include effects on navigation and aquatic life and the relative impacts of construction and aesthetics for the three alternatives.

10.3.4.1 MIXING EFFECTIVENESS

A discharge plume study, included as the Appendix to Section 10.3, has been performed to predict the thermal and chemical mixing characteristics for the alternative systems. Although it utilizes state-of-the-art mathematical models, this study is, at best, a theoretical estimate of the anticipated discharge plumes. Results presented are subject to a degree of uncertainity as is inherent in any attempt to apply mathematical quantification to environmental events. As the Clinch River is a controlled water body, the discharge plume study takes into consideration the varying flow regimes of the river. Plume formation is evaluated for four cases representing both typical (flowing) and extreme (extended no flow) river conditions. Typical cases considered include the high flow (5,068 cfs) which occurs in winter and the low flow (4,777 cfs) of summer. Extreme cases are based on the longest historical period of no flow past the Site and include a 29 day no-flow condition for two

different months of the year -- February and July. The complete list of the river conditions for these four flow regime cases is presented in Table 10.3A-1.

10.3.4.1.1 THERMAL PLUMES

Thermal discharges from the CRBRP are confined to the blowdown from the cooling tower basin. The cooling system is a recirculating type; thus, blowdown quantities are small (only 1.3% of the circulating flow of cooling water).

Cold-side blowdown is employed reducing the discharge temperature (at design point: 76°F wet-bulb, 50% relative humidity) from the condenser hot-water temperature of 116 degrees F to the cooling tower cold-water temperature of 91 degrees F. Blowdown temperatures which are expected to occur are shown in Table 3.4-4.

Thermal plumes for each of the four river flow cases and discharge alternatives are represented by the surface and cross-sectional isotherms in Figures 10.3A-4 to 10.3A-13. As a consequence of the relatively small blowdown flow, the plumes are, in most cases, neither extensive in size nor characterized by large temperature increases. In most cases, plumes do not extend across the full width of the river. Maximum surface temperatures within the plumes are less than 3.0 degrees F for all but the surface discharge cases as indicated in Table 10.3A-6. The isotherm encompassing the greatest surface acreage represents only a one-half degree temperature rise above ambient river temperature.

Surface Discharge

Mixing effectiveness for the surface discharge is heavily dependent upon river water level. In summer, normal pool elevation is 741 feet MSL, six feet above the discharge trough. For this condition, the surface discharge functions as a low momentum submerged discharge.

A comparison of the thermal plumes for the February and July extreme cases, shown in Figures 10.3A-4 and 10.3A-5, reveals that mixing effectiveness is increased in summer (July). Although the temperature differential between blowdown and river ambient is 6 degrees F less in July than February, the summer mixing advantage is primarily due to the submerged nature of the discharge. Isotherms representing 20, 10 and 5 degrees F occupy measurable surface area for the February case while the highest surface isotherm in July is 1.5 degrees F. Plume extent is also reduced. River volume affected by the plume is reduced in summer: 1.83 acre-feet are contained within the February 1.25 degrees F isotherm compared to 0.52 acre-feet within the 1.0 degree F isotherm in July, as indicated in Table 10.3-1.

Submerged Single Port Discharge

The advantages of discharging below the water surface are amplified by the submerged single port discharge. Combining deeper location (four feet below the surface discharge) with higher exit velocities, the submerged single port discharge provides a higher degree of mixing effectiveness than that possible with the surface discharge. Under both extreme cases, February and July, thermal plumes produced by the single port system are cooler and less extensive, as shown in Figures 10.3A-9 and 10.3A-10. Under February no-flow conditions, the near field region of high temperature differential that occurs with the surface discharge is absent from the single port plume, as shown in Figures 10.3A-5 and 10.3A-9. Affected river volume is reduced; compare the 0.82 acre-feet contained within the single port 1.0 degrees F isotherm with the 1.83 acre-feet within the surface discharge 1.25 degrees F isotherm shown in Table 10.3-1. In July, the advantages gained by greater submersion depth and higher exit velocity are clearly evident. The single port plume includes only the 0.5 degrees F isotherm encompassing less than 0.1 surface acre, as shown in Figure 10.3A-10, while the surface discharge (actually

submerged 5 feet) includes the 1.5, 1.0 and 0.5 degrees F isotherms comprising a total of 0.3 surface acre, shown in Figure 10.3A-6. Under flowing water conditions, the submerged single port discharge provides a high degree of mixing effectiveness. Plume formation for the typical case -- summer, Figure 10.3A-7, is limited to the 0.5 degree F isotherm and affects less than 0.03 surface acre. Although the river water level is reduced by five feet and the temperature differential is raised to 31 degrees F (from 24°F in summer), the typical case -- winter plume, Figure 10.3A-6, is only 0.5 degrees F warmer than the summer plume and its downstream extent is limited to approximately 320 feet.

Submerged Multiport Discharge

In their general shape, the plumes produced by the submerged multiport discharge are similar to those of the single port as a comparison of Figures 10.3A-6 and 10.3A-10, 10.3A-7 and 10.3A-11, 10.3A-8 and 10.3A-12 and 10.3A-9 and 10.3A-13, demonstrates. The use of four exit nozzles results in greater initial plume entrainment area and, therefore, more rapid reduction in plume excess temperature (degrees F above river ambient) in the near field mixing zone. However, due to the small CRBRP discharge flow, these reductions are not substantial. Excess temperature at the point of surface impingement for the multiport is a maximum of 0.30 degrees F below the single port values as shown in Table 10.3A-6. Plume extent, however, is greater for the multiport discharge due to its shorter trajectory lengths. The lower temperature isotherms spread out as more surface acreage is required to provide dilution. (An additional factor in the greater plume extents produced by the multiport discharge is related to the mathematics of the plume analysis itself and is explained under ASSUMPTIONS in the Appendix to Section 10.3.)

10.3.4.1.2 CHEMICAL PLUMES

Chemical constituents in the CRBRP discharge are dispersed in the river and form plumes of higher than ambient chemical concentrations in a manner similar to the waste heat discharges and subsequent isotherm development. Under typical (flowing water) conditions, the chemical isopleths produced by the single port and multiport systems are nearly identical in concentration rise (percent difference between initial blowdown and ambient river concentrations) with the multiport isopleths affecting greater river volumes as shown in Tables 10.3-2 and 10.3-3. During extended periods of no flow, chemical plumes for all three discharge alternatives become quite extensive and produce recirculation of higher than ambient chemical concentrations at the plant intake. Chemical concentration increases in the plumes after 29 days no flow (extreme cases) are the lowest for the multiport discharge with the single port isopleths approximately twice these values and the surface discharge four times as high, as indicated in Table 10.3-3. Elevation of the cooling system blowdown chemical concentrations occurs as a result of recirculation. The highest increases in blowdown chemical concentrations are produced by the surface discharge with the single port and multiport producing lower values, as shown in Table 10.3A-9.

10.3.4.2 EFFECTS ON NAVIGATION

No significant navigational effects for the reference system are anticipated. The surface discharge does not extend into the river and will not affect navigation. Although it is a more extensive underwater structure, the multiport discharge should not materially affect navigation as it does not protrude into the river traffic channel.

10.3.4.3 EFFECTS ON AQUATIC LIFE

Discharge system responsibility for aquatic life impact is primarily confined to the effectiveness of mixing discussed in Section 10.3.4.1 as

effluent quality and quantity are beyond its control. Effects on aquatic life of the plant thermal and chemical effluents are addressed in the appropriate sections (Heat Dissipation, Section 5.1; Chemical and Biocide Discharges, Section 5.4, etc.)

An area of potential aquatic impact that directly relates to the mixing function of the discharge system is the impaction of the river bottom by the thermal plumes produced during the February extreme case of 29-day no flow. As illustrated by the cross-sectional isotherms in Figures 10.3A-4, 10.3A-8 and 10.3A-12, each of the discharge alternatives will affect a portion of the bottom. The highest temperature isotherm impinging the bottom occurs for the surface discharge. However, it represents a temperature increase of less than 1.25 degrees F. Temperature elevations above ambient of this magnitude will not adversely affect benthic life, as indicated in Section 5.1. Cross-sectional isotherms impinging the bottom for the single port and multiport systems are lower than the 1.25 degrees F value for the surface discharge.

10.3.4.4 CONSTRUCTION EFFECTS

Each of the alternative discharge systems would necessitate some disruption of local river conditions during construction. Effects of construction on river flow, siltation and aquatic life for the selected system are discussed in Section 4.1. No permanent adverse impact to the river is anticipated. Of the three alternatives, the surface discharge would have the smallest impact as no pile driving or cofferdam construction is required. Both submerged discharges involve these procedures; however, as the single port system will not pose a significant construction concern, none would be expected of the multiport.

10.3.4.5 AESTHETICS

The surface discharge structure emerges from a buried pipe into an open trough at the river's edge. During the winter months, it would be

exposed to view and, therefore, would present a visual obstruction to the shoreline. Both submerged discharges, however, are below the river surface and out of sight.

10.3.5 ECONOMIC COSTS

Economic costs for the discharge system alternatives are presented in Table 10.3-4. The surface discharge is the least expensive alternative while the multiport is the most costly.

10.3.6 COMPARISON OF ALTERNATIVES

10.3.6.1 DIRECT COMPARISON OF REASONABLE ALTERNATIVES

A summary of the environmental and economic costs for the discharge alternatives is presented in Table 10.3-5. In terms of overall environmental costs, the submerged single port discharge emerges as the preferred system while the surface discharge is the economically desirable alternative.

Thermal mixing effectiveness for the submerged single port discharge is superior to either the surface or multiport systems. Surface discharge performance is hampered by its poor mixing potential during winter when it spills heated effluent over the surface of the river creating high temperature regions in the near field mixing zone, as shown in Figure 10.3A-4. The small size of the CRBRP discharges masks the near field mixing advantage generally demonstrated by the multiport design. Similar excess temperature reductions are, therefore, produced by the single port system while the multiport displays greater surface area entrainment for the far-field mixing zone.

In chemical mixing, the single port discharge holds a small advantage over the multiport for flowing water conditions while the reverse is true for the no-flow cases. The surface discharge is considerably less effective than either of these systems.

Navigation, aquatic life, construction and aesthetic effects are similar for all three alternatives. The surface discharge has a slight advantage for navigation and construction while the submerged discharge systems are preferred in terms of aquatic life impact and aesthetics.

Economic cost differentials between the three alternatives are not substantial with only a $10,000 interval between the lowest and highest cost systems.

As mixing effectiveness is the principal environmental concern associated with the discharge system, the surface discharge is considered the least desirable alternative since the substantially superior mixing potential of the submerged single port discharge can be obtained for only an additional $4,000. For an additional $6,000, the multiport system can be purchased. However, its mixing effectiveness is similar to the single port's for chemical effluents and is inferior for thermal discharges. On a cost-effective basis, therefore, the single port discharge is the preferred system.

10.3.6.2 REASONS FOR SELECTION OF CHOSEN SYSTEM

The high momentum submerged single port discharge is the selected system for the CRBRP. It provides a high degree of mixing effectiveness under both typical and extreme river conditions and ensures a rapid reduction in blowdown excess temperature and adequate dilution of chemical effluents.

TABLE 10.3-1

RIVER VOLUME AFFECTED* BY THERMAL PLUMES

	Surface Discharge (acre-feet)			Submerged Single Port (acre-feet)			Submerged Multiport (acre-feet)		
Isotherms (°F)	0.5	1.0	1.5	0.5	1.0	1.5	0.5	1.0	1.5
Typical Case -- Winter	--	--	--	1.64	0.26	<0.01	3.34	0.27	<0.01
Typical Case -- Summer	--	--	--	0.25	<0.01	<0.01	1.89	<0.01	<0.01
Extreme Case -- February	--	1.83**		+	0.82	0.14	1.68	0.38	<0.01
Extreme Case -- July	0.75	0.52	0.24	0.79	<0.01	<0.01	2.60	<0.01	<0.01

*Surface acreage (Table 7, Appendix 10.3) multiplied by depth of mixed layer (Table 6, Appendix 10.3)

**At 1.25 degrees F isotherm

+Mathematical model employed cannot handle boundary effects caused by the impingement of the 0.5 degree F isotherm with the opposite shore

TABLE 10.3-2

RIVER VOLUME AFFECTED* BY CHEMICAL PLUMES FOR COOLING SYSTEM BLOWDOWN CHEMICAL CONSTITUENTS**

	Surface Discharge		Submerged Single Port		Submerged Multiport	
	Isopleth+ (%)	Volume (acre-feet)	Isopleth (%)	Volume (acre-feet)	Isopleth (%)	Volume (acre-feet)
Typical Case -- Winter (flow = 5,068 cfs)	--	--	2.4	1.64	2.4	3.34
Typical Case -- Summer (flow = 4,777 cfs)	--	--	3.2	0.25	3.0	1.89
Extreme Case -- February (29 day no flow)	15.6-8.9++	0.55×10^4	6.9-4.7	1.43×10^4	3.9-2.4	0.65×10^4
Extreme Case -- July (29 day no flow)	17.0-8.9	0.55×10^4	8.0-5.3	1.23×10^4	4.1-2.9	1.20×10^4

*Surface acreage (Table 8, Appendix 10.3) multiplied by depth of mixed layer (Table 6, Appendix 10.3)

**Only the chemical constituents of the blowdown are subject to the cooling system concentration factor and the effects of recirculation.

+Isopleths represent percent increase in chemical concentration above river ambient (Table 8, Appendix 10.3)

++Range of concentrations within chemical plume

TABLE 10.3-3

RIVER VOLUME AFFECTED* BY CHEMICAL PLUMES FOR NON-BLOWDOWN CHEMICAL CONSTITUENTS**

	Surface Discharge		Submerged Single Port		Submerged Multiport	
	Isopleth+ (%)	Volume (acre-feet)	Isopleth (%)	Volume (acre-feet)	Isopleth (%)	Volume (acre-feet)
Typical Case -- Winter (flow = 5,068 cfs)	--	--	1.6	1.64	1.6	3.34
Typical Case -- Summer (flow = 4,777 cfs)	--	--	2.1	0.25	2.0	1.89
Extreme Case -- February (29 day no flow)	5.9	0.55×10^4	3.1	1.43×10^4	1.6	0.65×10^4
Extreme Case -- July (29 day no flow)	5.9	0.55×10^4	3.5	1.23×10^4	1.9	1.20×10^4

*Surface acreage (Table 10, Appendix 10.3) multiplied by depth of mixed layer (Table 6, Appendix 10.3)

**CRBRP effluent streams not affected by the cooling system concentration factor or recirculation include the discharges of the biocide, liquid radwaste and sanitary waste systems.

+Isopleths represent percent difference between effluent and ambient river chemical concentrations

TABLE 10.3-4

CAPITAL COSTS FOR DISCHARGE SYSTEM ALTERNATIVES

	Surface Discharge	Submerged Single Port	Submerged Multiport
Material Costs	Base	$1,000	$2,000
Installation Cost	Base	$5,000	$8,000
Total Differential Capital Cost	Base	$6,000	$10,000
Operating Cost (Pumping Requirement)	Same	Same	Same

TABLE 10.3-5

SUMMARY OF ENVIRONMENTAL AND ECONOMIC COSTS

FOR THE DISCHARGE ALTERNATIVES

Environmental Costs	Surface Discharge	Submerged Single Port	Submerged Multiport
Mixing Effectiveness			
Thermal:			
- Typical Case - Winter	--	Excellent	Good
- Typical Case - Summer	--	Good	Good
- Extreme Case - February	Poor	Good	Good
Extreme Case - July	Fair	Very Good	Good
Chemical:			
- Typical Case - Winter	--	Better	Good
- Typical Case - Summer	--	Better	Good
- Extreme Case - February	Fair	Good	Better
- Extreme Case - July	Fair	Good	Better
Navigation Effects	None	Slight	Slight
Aquatic Life Effects	Some	Less	Less
Construction Effects	Very Slight	Slight	Slight
Aesthetic Effects	Some	None	None
Economic Costs	Lowest	Lower	Low
Capital Cost	Lowest	Lower	Low

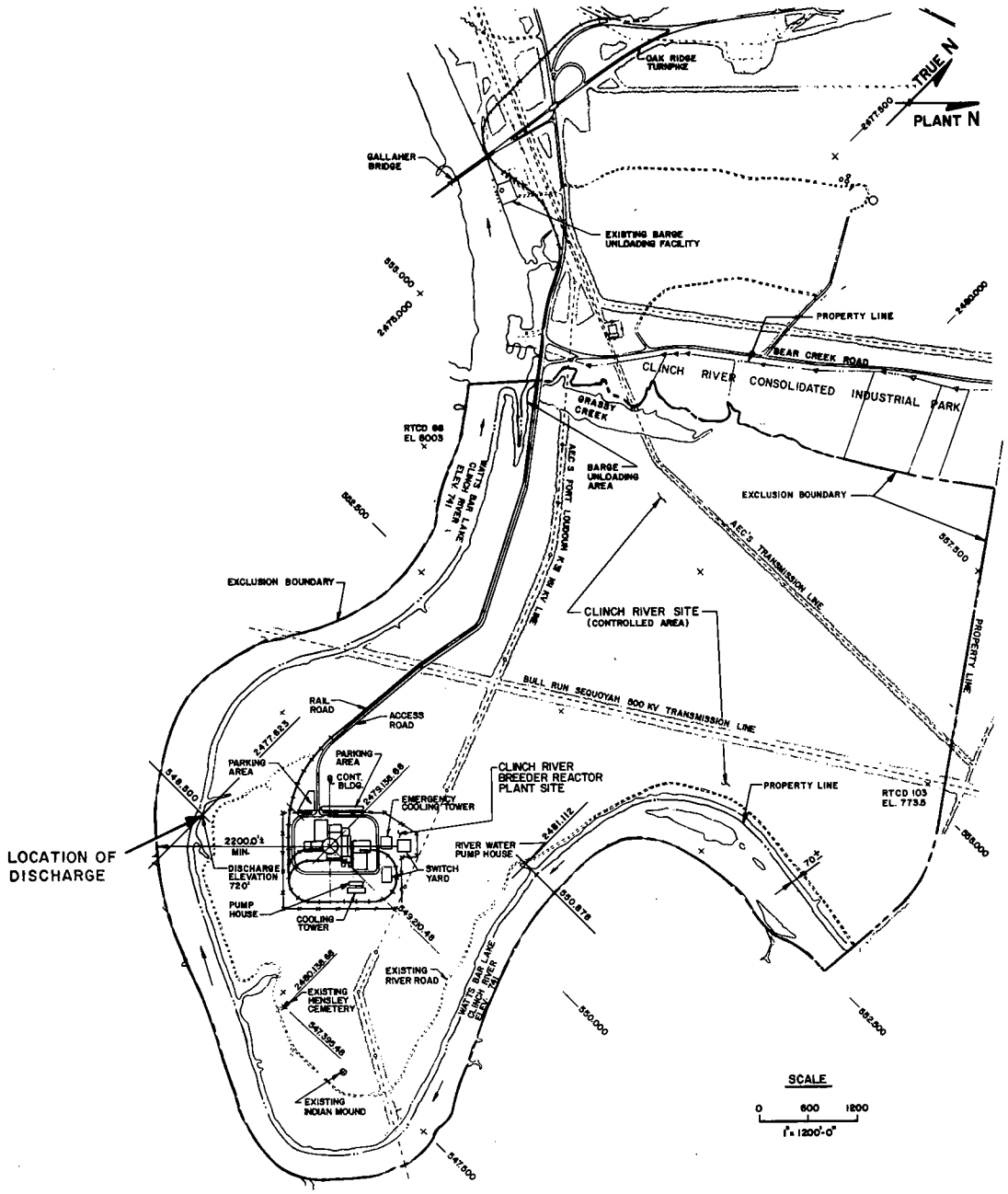

Figure 10.3-1 LOCATION OF CRBRP DISCHARGE

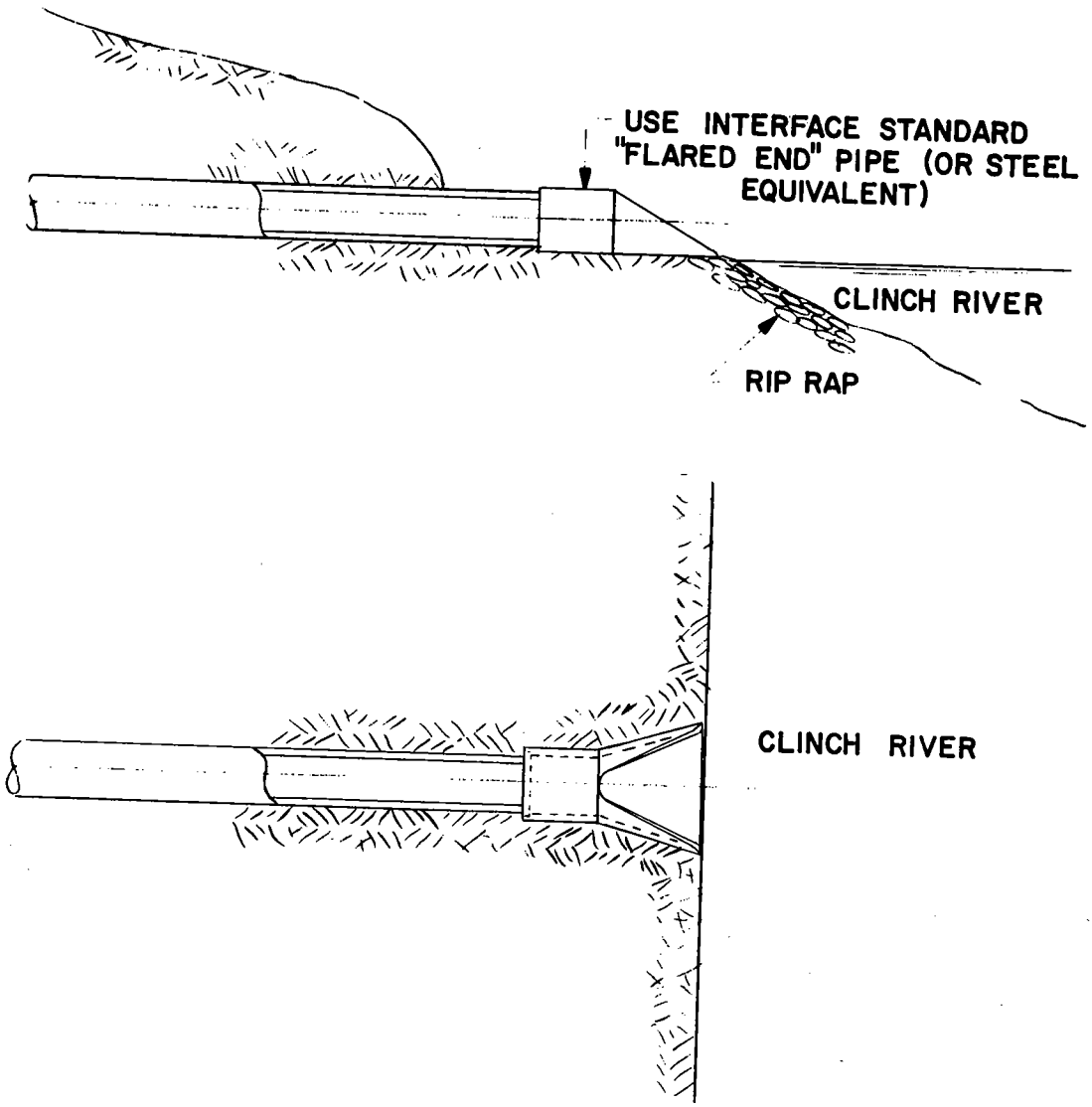

Figure 10.3-2 SURFACE DISCHARGE ALTERNATIVE

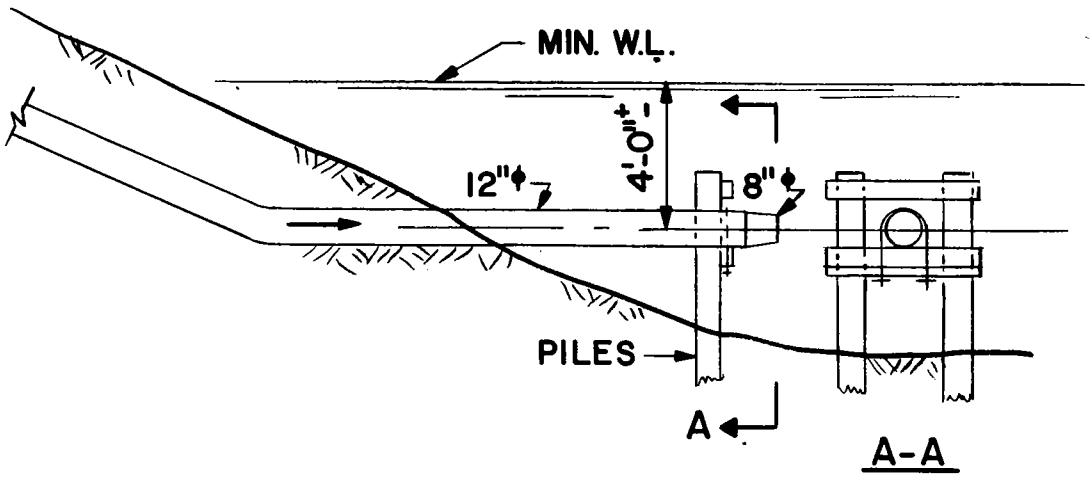

Figure 10.3-3 SUBMERGED SINGLE PORT DISCHARGE ALTERNATIVE

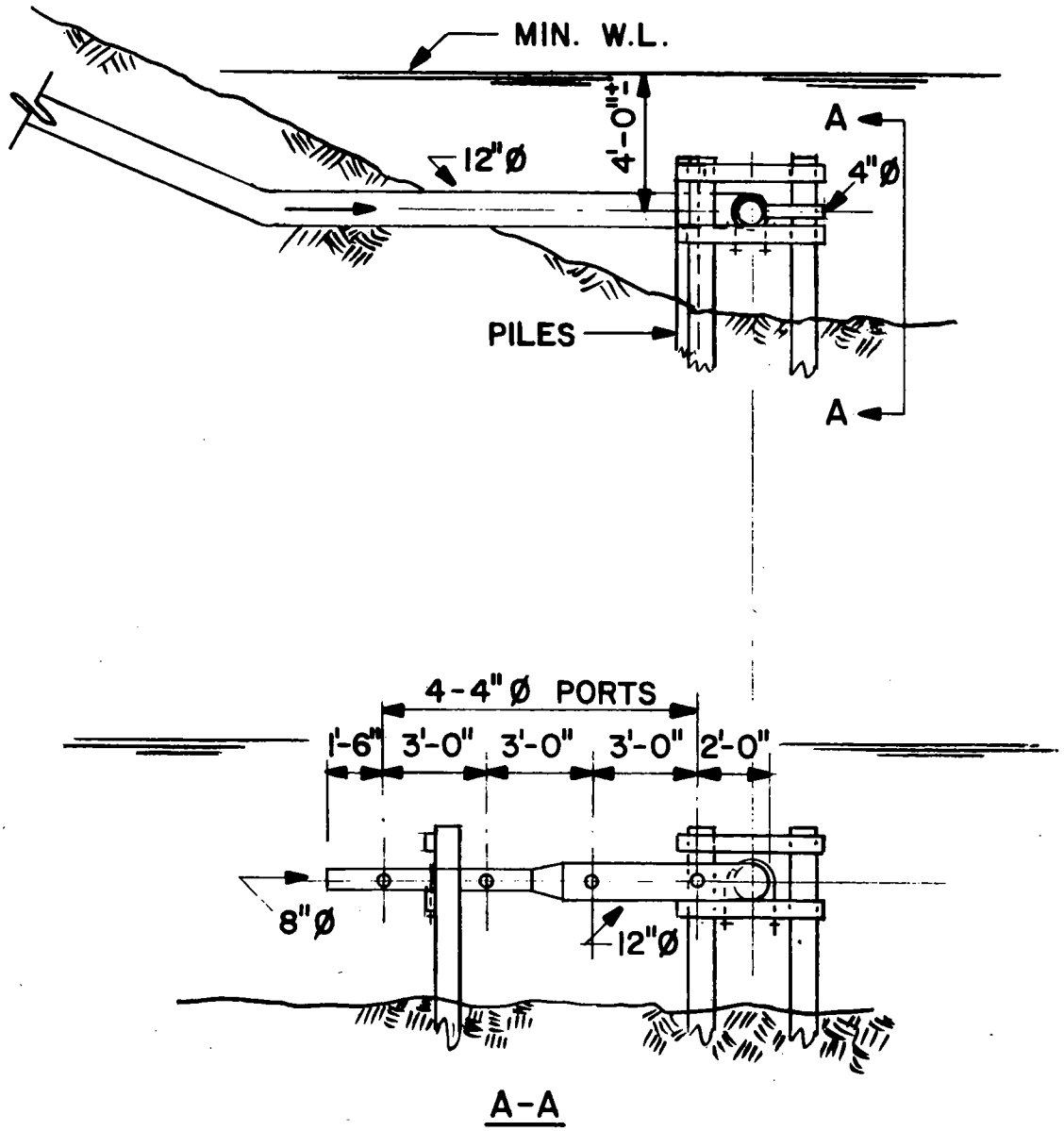

Figure 10.3-4 SUBMERGED MULTIPORT DISCHARGE ALTERNATIVE

10.4 CHEMICAL WASTE TREATMENT SYSTEM

The Chemical Waste Treatment System provides facilities for collection, treatment and disposal of CRBRP non-radioactive process wastes. It must handle multiple waste streams of varying volumes, types and frequencies. As such it is not composed of a single discrete facility, but instead, represents the integration of five subsystems each of which is designed to process a particular category of wastes.

A primary environmental concern associated with the Chemical Waste Treatment System is the effect of its liquid effluent discharge on the water quality and aquatic life of the Clinch River. Secondary concerns include disposal of sludges and environmental costs related to the operation of treatment processes.

The Chemical Waste Treatment System is designed to comply with applicable Federal and State requirements as indicated in Table 10.4-1 and is furthermore designed to minimize environmental impacts consistent with the benefit-cost balance.

The Chemical Waste Treatment System selected for the CRBRP is depicted in Figure 10.4-1.

In view of the composite nature of the Chemical Waste Treatment System, the alternatives study does not involve the examination of completely different systems but rather the consideration of further treatment procedures that will yield additional environmental benefits. The alternatives are:

1. Mechanical dewatering of clarifier blowdown;
2. Reverse osmosis in makeup water treatment system; and
3. Zero discharge of surge and neutralizing tank effluent.

10.4.1 DESCRIPTION OF ALTERNATIVES

To facilitate the description of alternatives and to clarify their relation to the system as a whole, a description of the reference (selected) Chemical Waste Treatment System will precede the presentation of the alternatives.

10.4.1.1 REFERENCE SYSTEM DESIGN

10.4.1.1.1 WASTE STREAMS

As previously noted, the proposed chemical waste treatment system handles waste streams that vary widely in volume, type and frequency. These may be divided into two major categories based on volume of waste to be treated: cooling tower blowdown (intermediate volume stream) and plant wastes (low volume stream). The plant wastes are further subdivided into four identifiable and interrelated waste stream categories: storm water, recycled wastewater, non-recycled wastewater and solid wastes.

The source of all waste streams, the anticipated frequency and average and maximum quantities of these wastes are identified in Table 10.4-2.

Cooling Tower Blowdown

Cooling tower blowdown is the largest continuous waste stream produced during plant operation. The quantity of cooling tower blowdown depends on reactor power level, ambient temperature and humidity, drift losses and the concentration of solids in the makeup water. Generally, the blowdown is continuous during normal operation and for full power operation varies from a summer time average of 3,100 gpm to a winter average of 2,300 gpm. Blowdown temperature also varies from 90 to 74 degrees F.

During operation of the cooling tower, the combination of evaporation, drift, makeup and blowdown results in a buildup in the concentration of dissolved solids in the cooling system. Bicarbonate alkalinity in the cooling system also increases. The increase in alkalinity results in an increase in pH and carbonate concentrations. As pH and carbonate concentrations increase, the solubility of calcium carbonate decreases resulting in a calcium carbonate scale. Scaling of the condenser heat transfer surfaces results in a gradual decrease in plant operating efficiency and eventual loss of generating capacity. To preclude this loss, the blowdown rate is controlled to maintain the concentration of dissolved solids in the cooling system at approximately 2.5 times the river water dissolved solids concentration. The normal range of dissolved solids concentration in the blowdown will be approximately 220 to 360 mg/l. Calcium carbonate scaling conditions are not anticipated during normal operation of the CRBRP.

Use of corrosion inhibitors in the cooling water will not be required since the blowdown ranges from chemically balanced to only slightly scale forming. It should be noted that the cooling water system services not only the main condenser but other plant auxiliary cooling systems.

No wood will be used in the cooling tower construction. Therefore, chemical wood preservatives will not be extracted and discharged to the river.

The makeup water coming from the river will contain various types of microbiological organisms. Biological growth on heat transfer surfaces causes fouling which reduces heat transfer and creates a loss in efficiency. The service lifetime of the cooling system components will also be decreased, since algae, slimes and bacteria all increase the corrosion rate of metal surfaces. To prevent deposits from

forming, a biocide system will be employed. This system and alternatives are discussed in Section 10.5.

Plant Wastes

Storm Water

Storm water is comprised of rainwater collected by roof drains and yard drains. The quantity of runoff is a function of rainfall intensity, frequency, duration, site topography, vegetation, condition of soil and general layout of buildings, roads and other paved areas. Runoff from road and parking areas may contain oil from accidental spills.

Outdoor oil and chemical storage tanks, unloading facilities and the transformer area are provided with dikes designed to retain leakage or spillage from this equipment. This will preclude their entry into the yard drain system.

Recycled Waste Water

With appropriate treatment, the liquid effluent from several waste streams is potentially recyclable and can be directed to the cooling tower basin thus reducing plant water consumption. The recycle waste streams consist of the following:

1. Filter and Demineralizer Backwashes--The Makeup Water Treatment System produces demineralized water for condensate makeup and laboratory use and provides the plant potable water supply. It includes sand filters, activated carbon filters and demineralizers. All collect some suspended solids in their beds during operation. During startup the filters and demineralizers are each backwashed once a day for about 15 minutes. The total of

these backwashes consists of a maximum of 18,000 gpd containing less than one pound of suspended solids.

2. Clarifier Blowdown--The Makeup Water Treatment System employs a clarifier which produces a sludge blowdown. The amount varies from 300 to 3,600 gpd and consists of river water, suspended solids and aluminum hydrate. Blowdown will be directed to sludge drying beds for dewatering. This will result in a solid waste of 50 to 600 pounds per day, as well as a recycled liquid of 285 to 3,240 gpd.

3. Non-Radioactive Floor Drainage--The building floor drains collect a wastewater that requires processing for oil removal. This water will be similar to river water and may contain a higher concentration of suspended solids. Expected flow from the floor drains is less than 10,000 gpd.

4. Neutralizing and Settling Facility Effluent--Effluent from the sludge drying beds, demineralizer and filter backwashes and floor drain water (following oil separation) are sent to the neutralizing and settling facility. Suspended solids are settled and pH is adjusted. The effluent from the facility is anticipated to be similar to river water and less than 30,000 gpd. It is estimated that the quantity of settled solids will be quite small and solids will be removed once or twice a year. These solids will be sent to the solid waste handling facility.

Non-Recycled Waste Water

Process waste streams which are not readily recycled are:

1. Condensate Polishing System Wastes--The rinses, backwashes and regenerant wastes from the condensate polishing system will range from approximately 3,000

to 40,000 gpd of high solids wastewater. Concentration of dissolved solids in this stream will be from 8,000 to 14,000 mg/l. About 90 percent of these solids will be sodium sulfate and the remaining 10 percent will be primarily iron, calcium and magnesium with some traces of nickel and copper.

2. Makeup Water Treatment System Demineralizer Regenerant Waste--This waste stream will be similar to the Condensate Polishing System effluent except that the quantity is expected to be a maximum of 10,000 gpd with an average of 1,000 gpd.

3. Auxiliary Steam Generator Blowdown--During startup, a small generator is used and approximately one gpm of blowdown will be produced. The blowdown will be alkaline, pH 9.0 to 9.5 and the temperature will be approximately 250 degrees F. It will contain approximately 200 mg/l dissolved solids and 0.5 mg/l ammonia. Hydrazine will be used as an oxygen scavenger in the generator water. Hydrazine decomposes to nitrogen and ammonia and does not produce suspended solids in the reaction.

4. Secondary Plant Laboratory and Sampling Wastes--These wastes will be non-radioactive chemical wastes produced by laboratory analysis of the treated water systems and the various samples from the monitoring program. The volume of this wastewater is expected to be relatively insignificant, less than 1,000 gpd.

5. Surge and Neutralization Tank Effluent--Control of pH and flow rate of waste from makeup water treatment demineralizer regeneration, condensate polishing system regeneration, auxiliary steam generator blowdown and lab and sampling wastes is accomplished in a surge and neutralizing tank. Neutralized wastewater is

characterized by high solids concentrations (up to 10,000 mg/l). The maximum flow expected from this tank occurs during plant startup and can be as high as 50,000 gpd. Average daily effluent is expected to be less than 5,000 gpd.

6. Chemical Cleaning Wastes--Periodic chemical cleaning of large components such as the Auxiliary Steam Generator and Condenser will be required. This cleaning is done in several stages and the chemicals used depend on the metallurgy. A typical procedure involves alkaline and acid washings and rinsing and neutralizing and passivating rinses. The volume of these wastes is expected to be in the order of 500,000 gallons. Chemical cleaning wastes will be disposed of off-site by a state-approved, licensed contractor.

Solid Wastes

Solid wastes from the cooling tower basin, neutralizing and settling facility and sludge dewatering beds will be processed by the solid waste handling facility.

10.4.1.1.2 PROCESS DESCRIPTION

A flow diagram of the reference chemical waste treatment system is shown in Figure 10.4-1. Five major subsystems comprise the chemical waste treatment system. These are the cooling tower blowdown, storm water, recycled wastewater, non-recycled wastewater and solid waste handling subsystems.

Cooling Tower Blowdown Treatment Subsystem

The cooling tower blowdown treatment subsystem is designed to satisfy all effluent guidelines presented in Table 10.4-1. Control of temperatures, pH and residual biocide is provided. No oil or grease is expected in the blowdown. To ensure compliance with proposed suspended solids guidelines identified in Table 10.4-1, blowdown treatment via filtration, sedimentation tanks or settling ponds may be required.

Storm Water Treatment Subsystem

Storm water collected by the roof and yard drains is sent to a catch basin. Catch basin effluent is discharged to the Clinch River via a separate line, located below the normal low water level maintained in the catch basin. A portable oil skimmer will be available in case a visible oil slick appears on the surface of the catch basin. Any oil collected will be disposed of off-site.

Recycled Wastewater Treatment Subsystem

The recycled wastewater treatment subsystem provides final treatment for all recycled waste streams and preliminary treatment of oil-contaminated wastewater and clarifier blowdown.

Plant waste streams are segregated by source and chemical composition. If oil contamination is detected, the stream is sent to an oil separator. The major input to the oil separator comes from the non-radioactive floor drains. After treatment, the separator effluent is sent to the neutralizing and settling facility; the collected oils are reclaimed or disposed of as is appropriate.

A sludge blowdown is produced by the Makeup Water Treatment System clarifier. Moisture content of the sludge is reduced in gravity

sludge drying beds. The liquid effluent is sent to the neutralizing and settling facility and the sludge cake to the solid wastes handling subsystem.

The neutralizing and settling facility provides final treatment of recycled wastewater and is comprised of a 60,000 gallon capacity settling tank and pH adjustment equipment. The influent stream is neutralized to a pH range of 6.0 to 9.0. The effluent is recycled to the cooling tower basin thus reducing Cooling System makeup water requirements.

Non-Recycled Wastewater Treatment Subsystem

Treatment processes for non-recycled waste streams include neutralization and filtration. The surge and neutralizing tank is a 60,000 gallon capacity unit that delays the passage of the highly acidic and basic wastewaters that result from demineralizer regeneration. Effluent from the tank is a neutralized, but high total dissolved solids (TDS) stream. It is sent to a filtration unit to provide suspended solids reduction to 30 mg/l. The final liquid effluent is discharged to the cooling tower blowdown line. Sludges from the filtration unit are processed by the solid waste handling subsystem.

Solid Waste Handling Subsystem

Solid wastes from the cooling tower basin, gravity sludge dewatering beds, neutralizing and settling tank and non-recycled wastewater filtration unit are collected and processed by the solid waste handling subsystem. Final waste disposal will be by a state-approved, licensed contractor.

10.4.1.2 ALTERNATIVES

Three areas within the chemical waste treatment system were considered potentially applicable to further treatment: the clarifier blowdown, the volume of regenerant wastes produced and the surge and neutralizing tank effluent. Each of the alternatives presented is designed to reduce the volume and/or improve the quality of its associated waste stream thus enhancing the overall environmental performance of the chemical waste treatment system. (Relative performance of several of the alternatives is included within Table 10.4-3.)

10.4.1.2.1 MECHANICAL DEWATERING OF CLARIFIER BLOWDOWN

Gravity sludge drying beds generally produce a sludge that is 20 to 40 weight-percent solids. Percentage achieved is a function of retention time and meteorological conditions. Mechanical dewatering is an alternative that often produces a more compact and dryer sludge. The environmental advantages of this process include reduction in solid waste volume and a slight increase of recyclable water.

Two mechanical dewatering methods may be utilized: rotary vacuum filtration or centrifugation. Both require a thickener for pretreatment of the sludge.

10.4.1.2.2 REVERSE OSMOSIS IN MAKEUP WATER TREATMENT SYSTEM

The waste stream containing the highest level of impurities is the non-recycled wastewater. One method of further treating this stream is to reduce its volume at the source. Demineralizers are employed by the Makeup Water Treatment System to obtain the high quality water required for condensate makeup. Approximately biweekly regeneration of the demineralizer beds is needed. This produces a 1,000 gpd average, 10,000 gpd maximum input to the non-recycled waste stream. Frequency

of regeneration and, consequently, the volume of wastewater can be reduced by providing pretreatment of the demineralizer influent through reverse osmosis.

Reverse osmosis reduces the dissolved solids content of water by reversing the process of natural osmosis through pressure-forced flow across a semipermeable membrane. The products of reverse osmosis are a low TDS effluent and a high TDS brine.

10.4.1.2.3 ZERO DISCHARGE OF SURGE AND NEUTRALIZING TANK EFFLUENT

A second alternative method of treating the non-recycled waste stream is to provide a level of additional treatment to the surge and neutralizing tank effluent that will result in zero discharge to the Clinch River. Three processes that accomplish this are identified: off-site treatment at an existing facility, on-site percolation ponds and evaporation.

Off-Site Treatment

The processing of non-recycled wastewater at an existing treatment facility is a potential means of achieving zero discharge at the site. A suitable facility capable of handling the increased load without suffering loss of efficiency and located close enough to keep pipeline construction and pumping costs reasonable is required. Pretreatment standards (EPA) would have to be met.

Percolation Ponds

Percolation ponds would utilize the natural assimilative capacity of soil to treat the surge and neutralizing tank effluent prior to its entry into the groundwater supply.

Successful application of ground discharge requires suitable soil composition and depth such that anticipated waste loadings can be applied without clogging or back-up. Soils subject to short-circuiting with attendant introduction of inadequately treated wastes into ground water supplies must be avoided.[1]

Evaporation

An evaporation process can be employed to produce a high quality liquid effluent that is suitable for recycle. The evaporation procedure is a form of distillation in which the wastewater influent is vaporized and then condensed. Typical TDS levels for the condensate are in the order of 10 mg/l. By-products of the evaporation cycle are a concentrated brine and some release of chemicals to the atmosphere. The evaporation process would not only provide zero release of high TDS effluent to the river but also reduce makeup water requirements through recycle of the liquid effluent to the cooling tower basin.

10.4.2 ELIMINATION OF IMPRACTICAL ALTERNATIVES

10.4.2.1 MECHANICAL DEWATERING OF CLARIFIER BLOWDOWN

Sludge dewatering by either vacuum filtration or centrifugation are alternatives to the gravity sludge drying beds. However, the smallest commercial units available for either process are much larger than that required. This will necessitate batch treatment of the sludge, a procedure that demands continuous operator attention. Other disadvantages of thickening with sludge dewatering equipment include increased energy consumption, higher local noise levels, potential use of additional chemicals as sludge conditioning agents for rotary vacuum filtration or centrifugation. Unlike sludge drying beds, the rotary vacuum filters and centrifuges will have to be placed inside a building.

The gravity sludge drying beds employed for the CRBRP will be operated at increased detention intervals to produce moisture reductions of the same magnitude as the above alternatives as shown in Table 10.4-3. Therefore, in view of its many drawbacks, mechanical sludge dewatering cannot be considered a reasonable alternative.

10.4.2.2 REVERSE OSMOSIS IN MAKEUP WATER TREATMENT SYSTEM

Addition of a reverse osmosis system to the Makeup Water Treatment System has the potential to reduce the frequency of the demineralizer regenerations and, therefore, the quantity of this waste stream. However, this application of reverse osmosis has several disadvantages. The reverse osmosis unit reduces the amount of regenerate waste, but its brine flow, while lower in solids, is higher in volume than the regenerant waste from the demineralizers. The unit will have to be operated on a start-stop basis or employ a surge tank since the flow rate is basically fixed by the minimum pressure requirement for proper salt rejection and the maximum pressure to avoid serious compaction of the membranes. The high alkalinity water will require pretreatment to avoid carbonate scaling in the unit. A decarbonator is required for the removal of carbon dioxide and to reduce the anion load in the demineralizer. Reliability of the reverse osmosis system is questionable. Therefore, the size of the demineralizers and the waste treatment facilities cannot be reduced, since there is a risk of loss of capacity in the reverse osmosis system.

In view of the above enumerated difficulties and the fact that its use would only reduce (not eliminate) a regeneration waste stream that represents less than one-third of the influent flow to the surge and neutralizing tank, reverse osmosis does not represent a reasonable alternative for the chemical waste treatment system.

10.4.2.3 OFF-SITE TREATMENT OF SURGE AND NEUTRALIZING TANK EFFLUENT

Off-site treatment of the surge and neutralizing tank effluent was considered. Upon investigation, it has been learned that, at this time, there are no treatment plants in the vicinity of the Site which can accept this quantity or type of effluent. This alternative is, therefore, not considered to be feasible.

10.4.2.4 PERCOLATION PONDS

Sending the surge and neutralizing tank effluent to percolation ponds for disposal was considered. The use of ground discharge is predicated on the availability of suitable soil conditions. Soil in the area of the CRBRP has been determined to be clay to a depth of 20 to 30 feet. This alternative is, therefore, not considered to be feasible based on the poor absorption characteristics exhibited by clay soils.

10.4.3 SPECIFICATIONS FOR REASONABLE ALTERNATIVES

The only alternative to the reference chemical waste treatment system which warrants further consideration is the additional treatment of surge and neutralizing tank effluent by an evaporation system.

Employment of an evaporator will result in concentration of the wastewater into a brine slurry and recovery of about 95 percent of the water as a high quality condensate (approximately 10 mg/l total solids). The concentrated brine can then be dewatered.

Evaporator design is based on a vapor-compression thermodynamic cycle. Other evaporation types would provide a similar service but would involve multiple units because of the high flow during startup operation. Also the metallurgical design of other less expensive evaporators was not considered to be operationally reliable for this application.

Vapor-compression evaporation concentrates the waste stream by raising the inlet water to the boiling point. Following pH correction and carbon dioxide removal with a scrubber, the feedwater is pumped to the heat transfer tubes where additional heat is added and the water vaporizes. Vapor is pumped to the opposite side of the tubes where condensation occurs. The condensate is then recycled to the cooling tower as makeup water and the brine sent to dewatering.

Two dewatering methods are a small solar pond and mechanical spray dryers. While a solar pond is an inexpensive and reliable method for ultimate disposal, this alternative is limited to sites having higher net evaporation rates than are available at the Site. A mechanical spray dryer can be used to produce a dry powder that is collected in a dust-free manner in containers for disposal.

10.4.4 ENVIRONMENTAL COSTS

The principal environmental concern associated with the CRBRP mechanical waste treatment system is the effect of its liquid discharge on the water quality and aquatic life of the Clinch River. For the purpose of the alternatives study, it is sufficient to utilize a single parameter--total dissolved solids--for comparing the magnitude of the effects produced by the reference system and evaporator alternative.

By eliminating the discharge of a high solids content effluent and permitting recycle of the regeneration waste stream, the evaporator reduces by 2.1 gpm the plant makeup water requirement and cooling tower blowdown flow rate and produces a 0.2 percent decrease in the TDS concentration of the chemical waste treatment system discharge. The significance of these environmental improvements is a function of the magnitude of their ultimate benefit to the Clinch River.

The regeneration waste recycle afforded by the evaporation process yields a net decrease of 0.03 and 0.08 percent in makeup water requirement and blowdown flow rate, respectively. These quantities are quite small and constitute only a negligible water use savings.

Value of the improvement in discharge water chemistry realized by employment of the evaporator alternative must be measured against the severity of the potential adverse effects produced by the reference system discharge. Changes in river TDS concentration caused by the effluents of the reference chemical waste treatment system alone and with the addition of the evaporator are presented in Table 10.4-4. Four cases representing the full range of possible river flow conditions, including extended no flow cases, are examined as discussed in Appendix 10.3.

Increases in river TDS concentrations for flowing water cases due to discharges from the reference system amount to less than 5 mg/l and are limited to 1.64 acre-feet of the river. Although considerably more river volume is affected by higher than ambient TDS levels during the extended no flow cases, these levels represent a maximum increase of 12.3 mg/l. This results in TDS concentrations that are considerably below the 500 mg/l maximum adopted by the Tennessee Water Quality Control Board as a general criterion for its most stringent water quality requirements.[2] Addition of the evaporator yields very small reductions in these concentrations.

An evaluation of the data presented in Table 10.4-4 indicates that the quality and quantity of the effluent from the reference chemical waste treatment system are such that no significant water quality changes will occur under any probable river conditions. Consequently, no adverse impact on aquatic life is anticipated. The inclusion of an evaporator process yields only marginal environmental improvements in river water quality due, primarily, to the low volume of the regeneration waste stream. A greater reduction in TDS rise would be produced by evaporation

(or similar treatment) of the large volume cooling tower blowdown stream. However, two factors strongly argue against such action: (1) the actual amount of solids in the tower blowdown is the same as that removed from the river during makeup--TDS concentration is raised only because the water volume is decreased (through cooling tower evaporation, drift, etc.); and (2) the reference chemical waste treatment system has been shown to be environmentally acceptable and, thus, the high costs of blowdown TDS treatment would not be justified.

10.4.5 ECONOMIC COSTS

Monetary costs for the chemical waste treatment system alternatives are presented in Table 10.4-5. The increases in the investment cost attributable to the evaporator is $592,700.

10.4.6 COMPARISON OF ALTERNATIVES

10.4.6.1 DIRECT COMPARISON OF REASONABLE ALTERNATIVES

Employment of an evaporator process within the proposed chemical waste treatment system has been identified as a viable alternative for the CRBRP. The foregoing environmental and economic analyses presented the benefits and the costs associated with evaporation of the regeneration wastes stream. Summarization of these findings presented in Table 10.4-6 indicates that the economic costs outweigh the environmental benefits. Reductions in river TDS attributable to the evaporator amount to a maximum of one quarter of one percent and, in view of the environmental acceptability of the reference system, do not justify the expenditure of over one-half million dollars.

10.4.6.2 REASON FOR SELECTION OF CHOSEN SYSTEM

The chemical waste treatment system identified in Figure 10.4-1 has been selected for the CRBRP. Its levels of treatment comply with all applicable governmental standards. Further, its effluent discharge to the Clinch River will not produce adverse environmental effects for either normal or extreme case flow conditions in the river.

TABLE 10.4-1

CLINCH RIVER BREEDER REACTOR PLANT

EFFLUENT LIMITATIONS AND WATER QUALITY*

Constituents	Water Quality Criteria: EPA Proposed Effluent Limitations**	Water Quality Criteria: Tennessee General Water Quality Criteria+	Proposed CRBRP Treatment Method
A. HEAT REJECTION SYSTEM BLOWDOWN			
Thermal Discharge	No discharge of heat except for cold-side cooling tower blowdown	The maximum water temperature shall not exceed 3°C relative to an upstream control point. The temperature of the water shall not exceed 30.5°C and the maximum rate of discharge shall not exceed 2°C per hour measured at mid-depth.	Mechanical Draft Cooling Tower with cold leg blowdown and submerged discharge.
Dissolved Oxygen (D.O.)	None specified	Minimum dissolved oxygen content of 5.0 mg/l or 3.0 mg/l in vicinity of discharge measured at a depth of 5 feet.	None required (minimum expected in discharge is 6.8 mg/l)
Hydrogen Ion Concentration (pH)	pH in the range of 6.0 to 9.0 at all times	pH in the range of 6.5 to 8.5, and shall not fluctuate more than 1.0 unit in a 24 hour period.	pH control, as required.

(Continued)

TABLE 10.4-1 (Continued)

Constituents	Water Quality Criteria: EPA Proposed Effluent Limitations**	Water Quality Criteria: Tennessee General Water Quality Criteria+	Proposed CRBRP Treatment Method
A. HEAT REJECTION SYSTEM BLOWDOWN (Continued)			
Chlorine (Cl)	Free available Cl <0.2 mg/l average and <0.5 mg/l maximum from an individual unit during one, 2-hour period per day.	None specified	Controlled chlorination with blowdown stopped.
Corrosion Inhibitors	No discharge	No toxic substances added that affect man or animals.	None used
Total Suspended Solids TSS (Turbidity or Color)	Total suspended solids Daily average <15 mg/l x FLOW++ One day maximum 100 mg/l x FLOW	There shall be no turbidity or color added in amounts or characteristics that cannot be reduced to acceptable concentrations by conventional water treatment processes.	Provisions for sand filtration or settling of blowdown prior to discharge if required. (Backwash sent to settling pond).
Oil, Grease	Oil and grease daily average 10 mg/l x FLOW.	There shall be no visible solids, scum, foam, oil, sleek, etc.	Oil separator provided where appropriate.
Other Debris	No discharge of debris		No dumping to river.
Total dissolved solids - TDS	None specified	The total dissolved solids shall at no time exceed 500 mg/l	Control of concentration by rate of blowdown. Use of mixing zone if necessary.∇

(Continued)

TABLE 10.4-1 (Continued)

Constituents	Water Quality Criteria: EPA Proposed Effluent Limitations**	Water Quality Criteria: Tennessee General Water Quality Criteria+	Proposed CRBRP Treatment Method
B. WASTE WATER DISPOSAL SYSTEM EFFLUENT▽▽			
Pollutants from Clarification and Softening Water Treatment#	No Discharge	None Specified	Sludge Drying Beds
Polychlorinated Biphenyl Transformer Fluid	No Discharge	None Specified	Dikes will prevent discharge in case of spill
Iron (Fe)	Iron 1 mg/l x FLOW (daily average)	None Specified	Anticipate only trace quantities in discharge. Provisions for high pH treatment can be added if necessary.
Copper (Cu)	Copper 1 mg/l x FLOW (daily average)	None Specified	Anticipate only trace quantities in discharge. Provisions for high pH treatment can be added if necessary.

(Continued)

TABLE 10.4-1 (Continued)

Constituents	Water Quality Criteria: EPA Proposed Effluent Limitations**	Water Quality Criteria: Tennessee General Water Quality Criteria+	Proposed CRBRP Treatment Method
B. WASTE WATER DISPOSAL SYSTEM EFFLUENT▽▽ (Continued)			
Total Suspended Solids (TSS)	Daily average 15 mg/l x FLOW One day maximum - 100 mg/l x FLOW	None Specified	Filters provided. Rainfall sent to catch basin.
Hydrogen Ion Concentration (pH)	pH in the range of 6.0 to 9.0 at all times	None Specified	Neutralizing tank with necessary accessories.

*Permits required to meet these criteria are listed in Section 12.

**Federal: "Steam Electric Power Generating Point Source Category Proposed Effluent Limitations Guidelines and Standards," Volume 39, No. 43, FED REG (March 4, 1974). Under the EPA proposed regulation, CRBRP would be a large base-load unit and subject to the standards of performance for new sources.

+State: "General Water Quality Criteria for the Definition and Control of Pollution in the Waters of Tennessee," adopted on October 26, 1971 and amended on December 14, 1971 and October 30, 1973.

++FLOW is defined as the average of daily values for thirty (30) consecutive days.

▽The mixing zone in each particular case shall be defined by the State of Tennessee Water Quality Control Board. Stream flow bases will be instantaneous minimum flow.

▽▽EPA Designations - low volume wastes and rainfall run-off sources

#Assumed to not include water treatment wastes from ion exchange

TABLE 10.4-2

CHEMICAL WASTE TREATMENT SYSTEM FLOW RATES

Waste Stream Source	Frequency	Average and Maximum Quantity
I. Cooling Tower Blowdown	Continuous	2,300 - 3,100 gpm
II. Plant Wastes		
A. Storm Water		
1. Yard and Roof Drains	Unsch. Intermittent	1,000,000 gpd
B. Recycled Wastes		
1. Clarifier Blowdown	Continuous	300 - 3,600 gpd
2. Effluent from Sludge Drying Beds	Continuous	285 - 3,240 gpd
3. Makeup Water Treatment System rinses and backwash water	Sch. Intermittent	1,500 - 18,000 gpd
4. Non-Rad Floor Drains	Unsch. Intermittent	1,000 - 10,000 gpd
5. Neutralizing & Settling Facility Effluent	Sch. Intermittent	2,785 - 31,240 gpd
C. Non-Recycled Wastes		
1. Condensate Polishing System Wastes	Sch. Intermittent	2,000 - 40,000 gpd
2. Makeup Water Treatment System Demineralizer Regenerant Waste	Sch. Intermittent	1,000 - 10,000 gpd
3. Surge and Neutralizing Tank Effluent	Sch. Intermittent	3,000 - 50,000 gpd
4. Secondary Plant Lab and Sampling Wastes	As Required	1,000 gal.
5. Auxiliary Steam Generator Blowdown	As Required	1 gpm
6. Condenser Chemical Cleaning	As Required	200,000 gal.
7. Steam Generator Chemical Cleaning	As Required	250,000 gal.
8. Chemical Storage Area Drains	Unscheduled	6,000 gal.
9. Oil Collection Tanks	Unscheduled	10,000 gal.
D. Solid Wastes	As Required	1,000 - 15,000 lb/day

TABLE 10.4-3

CHEMICAL WASTE TREATMENT SYSTEM

Stream Description

Stream Description	Treatment Mode	Chemical Content of Treatment Mode Effluent	Range of Effluent Quantity	Remarks
I. Cooling Tower Blowdown	Provisions for filtering and control of pH, oil, etc.	Clinch River Water concentrated 2-3 times Free available chlorine less than 0.2 mg/l	2,300 - 3,100 gpm	
II. Plant Wastes				
A. Recycle Wastes				
Clarifier Blowdown		Clinch River Water, Aluminum Hydrate & trace Iron & Manganese. Approx. 2% solids in Blowdown	300 - 3,600 gpd**	
Clarifier Blowdown	Gravity Sludge Drying Beds	Sludge Approx. 20-40% solids	15 - 360 gpd**	Base Case Treatment Mode as shown in Figure 10.4-1
		Liquid Clinch River water with slight increase in sodium sulfate	285 - 3,240 gpd	
Clarifier Blowdown	Thickener followed by Vacuum Filtration	Sludge Approx. 40% solids	15 - 180 gpd**	Alternative Treatment Mode for Clarifier Blowdown
		Liquid Same as gravity sludge drying beds	285 - 3,420 gpd	

(Continued)

TABLE 10.4-3 (Continued)

Stream Description	Treatment Mode	Chemical Content of Treatment Mode Effluent	Range of Effluent Quantity	Remarks
Clarifier Blowdown	Thickener followed by centrifugation	Sludge Approx. 20-30% solids	20 - 360 gpd**	Alternative Treatment Mode for Clarifier Blowdown
		Liquid Same as gravity sludge drying beds	280 - 3,240 gpd	
Neutralizing & Settling Facility overflow	Neutralization & Settling	Clinch River Water* with slightly high sodium sulfate content pH 6.5-8.5	2,785 - 31,240 gpd	
B. Non-Recycled Water				
Demineralizer and Condensate Polisher Neutralized Regenerant Waste		Approx. 8,000-14,000 mg/l, TDS 90% Sodium Sulfate. Remaining 10% consists primarily of Fe, Ca, Mg, PO_4, with trace quantities of Cu, Cr and Ni below detectable limits.	3,000 - 50,000 gpd	
Demineralizer and Condensate Polisher Neutralized Regenerant Waste	Evaporator	Evaporator Distillate is a high quality water (10 ppm TDS) and will be recycled	3,000 - 49,500 gpd	Alternative
		Sludge 50% solids content	25 - 500 gpd**	

(Continued)

TABLE 10.4-3 (Continued)

Stream Description	Treatment Mode	Chemical Content of Treatment Mode Effluent	Range of Effluent Quantity	Remarks
Demineralizer and Condensate Polisher Neutralized Regenerant Waste	Filter	Filtrate Approx. 12,000 ppm TDS	3,000 - 49,800 gpd	
		Filter Cake Calcium Sulfate, Fe, Ca	10 - 200 gpd**	
Non-Radioactive Floor Drains		Similar to Clinch River Water	10,000 gpd	Water in Floor Drain System is assumed to be water used for washdown pump seal leakage, etc
Non-Radioactive Floor Drains	Oil Separator Effluent	Treated effluent will contain 10 ppm free oil	10,000 gpd	
C. Storm Water				
Roof and Yard Drain		Rain water that may have picked up a little oil	1,000,000 gpd	
Catch Basin Effluent to Clinch River		Rain water and oil traces+	1,000,000 gpd	

(Continued)

TABLE 10.4-3 (Continued)

Stream Description	Treatment Mode	Chemical Content of Treatment Mode Effluent	Range of Effluent Quantity	Remarks
Catch Basin Oil Waste	Oil Skimmer++	Oil & misc. entrained solids	1 gpd**	Waste placed in container, sealed and disposed off-site

*Clinch River water chemical composition-Ref. WESD Draft Section E.R. Section 2.5 Hydrology dated 9/1/73

**All waste not sent to Clinch River will be sent to the solid waste handling facility.

+Oil traces are interpreted to mean virtually undetectable.

++To be used only if visible oil slick is detected

TABLE 10.4-4

EFFECT OF CHEMICAL WASTE TREATMENT SYSTEM DISCHARGES OF TOTAL DISSOLVED SOLIDS ON CLINCH RIVER WATER QUALITY*

Flow Regime Cases	Clinch River Concentration (mg/l)	Reference System		Reference System with Evaporator	
		Concentration** (mg/l)	Affected River Volume (acre-feet)	Concentration+ (mg/l)	Affected River Volume (acre-feet)
Typical Case -- Winter (flow = 5,068 cfs)	150	153.8	1.64	153.6	1.64
Typical Case -- Summer (flow = 4,777 cfs)	150	154.9	0.25	154.8	0.25
Extreme Case -- February (29 day no flow)	150	160.8-157.3++	1.43×10^4	160.4-157.1	1.43×10^4
Extreme Case -- July (29 day no flow)	150	162.3-158.2	1.23×10^4	162.0-158.0	1.23×10^4

*Values presented based on Table 10.3-2.

**TDS concentrations for the Reference System are calculated by the following equation:

$$\text{Concentration (mg/l)} = \left[\frac{(\text{Isopleth }\%)}{(1.5)(100)}\right] \times \left[\frac{(150)(2.5)(F_{BD}) + (12{,}000)(2.1)}{(F_{BD} + 2.1)} - 150\right] + 150$$

where,

Isopleth % is taken from Table 10.3-2
(150)(2.5) is the TDS concentration in the cooling tower blowdown
F_{BD} is the blowdown flow (varies seasonally: see Table 3, Appendix 10.3)
(12,000) is the TDS concentration (in mg/l) of the surge and neutralizing tank effluent
(2.1) is the surge and neutralizing tank effluent flow rate (in gpm).

+For the Reference System with Evaporator, the TDS contribution of the surge and neutralizing tank effluent is eliminated. Therefore, the cooling tower blowdown alone is responsible for TDS and the river concentrations are determined directly by multiplying the ambient level (150 mg/l) by the isopleth percent (as it appears in Table 10.3-2).

++Range of concentrations within chemical plume (see Appendix 10.3).

TABLE 10.4-5

INVESTMENT COSTS FOR CHEMICAL
WASTE TREATMENT SYSTEM ALTERNATIVES
(All Costs in 1974 Dollars)

Evaluated Costs ($)	Reference Chemical Waste Treatment System	Reference System With Evaporator
A. INVESTMENT COSTS		
1. Civil-Structural	BASE	800
2. Electrical	BASE	4,100
3. Mechanical	BASE	570,000
4. Total Equipment Costs	BASE	574,900
B. EQUIVALENT INVESTMENT COSTS		
1. Chemical Costs	BASE	200
2. Storage and Handling of Chemicals	BASE	100
3. Storage and Handling of Wastes	BASE	100
4. Disposal of Wastes	BASE	400
5. Operation and Maintenance	BASE	8,300
6. Total Operating Costs	BASE	9,100
C. AUXILIARY POWER COSTS		
1. Total Power (kW)	BASE	150
2. Equivalent Investment Costs*	BASE	8,700
TOTAL EQUIVALENT INVESTMENT COST	BASE	592,700

*At $57.8/kW based on 3 hours per day operation

TABLE 10.4-6

SUMMARY OF ENVIRONMENTAL AND ECONOMIC FACTORS
FOR EVAPORATOR ALTERNATIVE

Environmental Benefits	Evaporator
Reduction in River TDS Levels	
Typical Case -- Winter	0.13%
Typical Case -- Summer	0.06%
Extreme Case -- February	0.25%
Extreme Case -- July	0.18%
Economic Costs	
Additional Investment Cost	$592,700

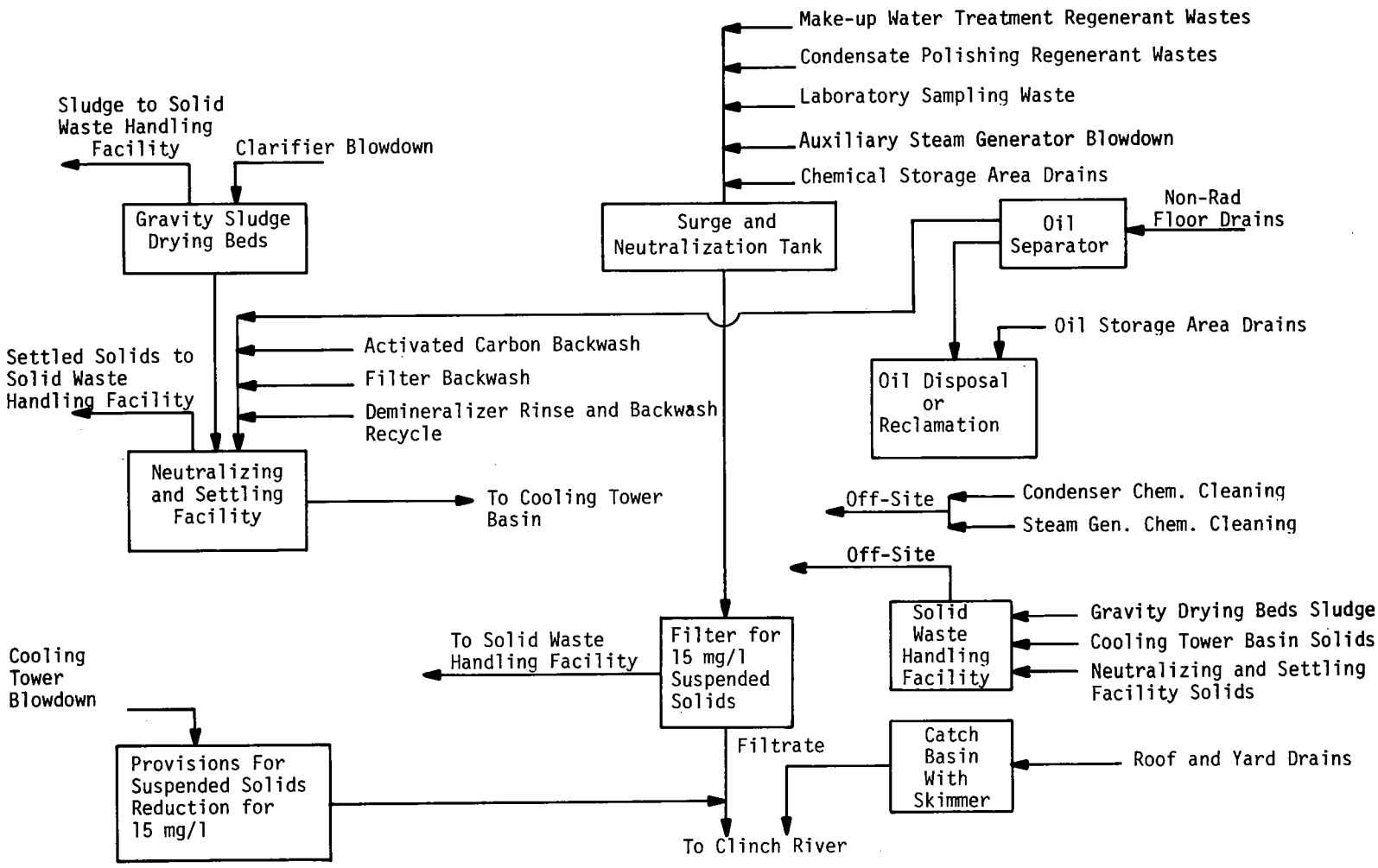

Figure 10.4-1 CHEMICAL WASTE TREATMENT SYSTEM

10.5 BIOCIDE SYSTEM

The Biocide System is employed to maintain cooling system efficiency and longevity by eliminating biological interference. Algae, bacteria, fungi and occasionally crustacea and mollusks enter the cooling system via the plant intake and colonize condenser tubes, valves, pumps, cooling tower fill and auxiliary piping. Their presence causes a reduction in heat transfer rates and can lead to clogging with attendant flow rate losses. The Biocide System must control these growths and maintain relatively clean surfaces so that heat transfer and circulating water flow are not significantly impaired.

A major environmental concern associated with the Biocide System is the effect on aquatic life of any residual biocide (chemical) activity that may be present in the plant discharge. An additional concern is the effect of the biocide on the survival of organisms entrained in the cooling system water supply. This, however, becomes a valid issue only for once through cooling systems where some survival is expected; in a closed cycle system such as that of the CRBRP no survival is anticipated, irrespective of the biocide system utilized.

Chlorination is the selected biocide system for the CRBRP.

Alternatives considered for the biocide system are as follows:

1. Chlorination;
2. Organic chemicals;
3. Ozone; and
4. Mechanical cleaning.

10.5.1 DESCRIPTION OF ALTERNATIVES

10.5.1.1 CHLORINATION

Chlorine is the most widely employed water disinfectant and biocide in this country. It is economical, fast acting and well proven with a substantial body of technical information available concerning effectiveness and application.

One of the principal advantages of chlorination becomes a potential liability when it is used as a biocide. The chlorine residual, if not dissipated prior to cooling system blowdown, can adversely affect aquatic life in the receiving water body. This potential is increased if tars or ammonia are available to form chlorinated hydrocarbons or chloramines, both of which are highly toxic to fish.[1,2]

Since chlorine is an oxidizing biocide, its costs are escalated when a high chlorine demand cooling water (from a polluted stream) is utilized. Additionally, the use of chlorination is less favored when sufficient iron and manganese are present and their reactions with chlorine lead to fouling problems.[3] Wooden cooling towers are subject to delignification at excessive chlorine concentrations.[1]

Chlorination for a closed cycle cooling system is usually applied at the intake system circulating water pumps. Chlorine is available as a gas, in liquid form or as sodium hypochlorite. The method of application is continuous low level addition (approximately 1 ppm) to control biological fouling supplemented by slug feeding intermittently (3 ppm for 15 minutes every eight hours) to remove accumulated slime deposits.

10.5.1.2 ORGANIC CHEMICALS

Organic chemicals represent a relatively new class of biocides. These are generally complex hydrocarbons whose mode of action is non-oxidizing resulting in a potential competitive advantage over chlorination under certain conditions; see Section 10.5.1.1. The cost of organic biocide treatment, however, is usually much higher than chlorination and the amount of technical information available concerning its application is not as extensive.

Environmentally, organic biocides present the same problem as chlorination -- residual activity. Although there is wide variation among them, all of the organic biocides are toxic to fish in the concentration range typical of slug feeding applications.[1]

Two of the more common types of organic biocides are the quaternary ammonium compounds and the unsaturated aldehydes (acroleins). The latter are the more highly toxic and volatile group.

10.5.1.3 OZONE

Ozone (O_3) is a highly reactive form of oxygen with very strong oxidizing capabilities. As a disinfectant and particularly as a virucide, ozone is superior to chlorine. Contact time is greatly reduced as ozone disinfection is nearly instantaneous. Additionally, ozone reduces taste, odor, color and BOD, and increases dissolved oxygen levels.

The half-life for ozone in water is in the order of minutes; consequently, there is no residual activity. This gives ozone a strong environmental advantage in applications where the treated effluent is discharged into a natural water body. Further, it mandates that ozone be generated on-site thus alleviating the potential transportation hazards that are associated with the shipment of chlorine.

Ozone is generated by passing clean, cold air (or pure oxygen) over electrically charged plates. Various types of injectors are then utilized to introduce the O_3 gas into the water for treatment.

The use of ozone in this country has been quite limited. For many years the economics of its production were prohibitive. Today, however, technical advancements in ozonation have greatly improved its economic position.[4,5]

10.5.1.4 MECHANICAL CLEANING

Mechanical cleaning is a direct way of attacking biological fouling that produces a more positive cleaning of condenser tubes and, therefore, is advantageous from the viewpoint of plant performance. It is environmentally attractive because it does not produce a discharge of residual chemical activity.

There are two major types of mechanical cleaning systems. One utilizes sponge rubber balls of slightly larger diameter than the condenser tubing. These are continually recirculated and produce a scouring effect on the inside tube surfaces. The other system employs plastic brushes which periodically travel from end to end of the condenser tubes actuated by flow direction changes.

Mechanical cleaning is limited in usage to fairly straight sections of tubing such as the main condenser and certain auxiliary cooling systems. Valves, pumps and cooling towers cannot be serviced; thus, a chemical biocide such as chlorine must be used in conjunction with mechanical cleaning. The quantity and frequency of biocide application, however, is reduced in a mechanical cleaning system.

10.5.2 ELIMINATION OF IMPRACTICAL ALTERNATIVES

10.5.2.1 ORGANIC CHEMICALS

Organic biocides are beset by the same environmental disadvantage as chlorination -- residual activity. Further, the fate of complex hydrocarbons released in a water body is less well understood. Organic biocides would be preferable only for those cases where high chlorine demand, fouling caused by iron/manganese-chlorine reactions, or deterioration of wooden cooling towers is anticipated. The organic loading of the Clinch River at the Site is low and no unusually high chlorine demand is expected. Concentrations of iron and manganese are also low and the cooling towers will be of concrete. Consequently, no economic, performance, or environmental advantage exists that would favor the use of an organic biocide for the CRBRP.

10.5.2.2 OZONE

Although its use in water and wastewater disinfection has been rising, ozonation has not achieved sufficient operational exposure as a biocide to recommend its employment at this time. Experience in selecting proper dose levels and application frequencies is lacking, a point that is particularly important in reference to the Asiatic clam infestation of the Ohio and Tennessee River Valleys.[6] These clams are prevalent in the Clinch River at the Site and are known to create clogging problems in plant waterlines. Considerable experience has been gained in controlling such organisms through chlorination. The use of ozonation would require the development of new control procedures.

The main environmental advantage of ozonation is its lack of residual activity. However, as ozone is rapidly reduced, oxygen levels increase and supersaturation may occur. This likelihood is particularly enhanced for a power plant where the ozonated water is also heated prior to

discharge. Supersaturated conditions in the thermal plume would be detrimental to fish. If the ozonator receives air rather than pure oxygen, the more serious case of nitrogen supersaturation is a distinct possibility.

10.5.3 SPECIFICATIONS FOR REASONABLE ALTERNATIVES

The chlorination biocide system for the CRBRP will primarily utilize intermittent application several times daily to control biological fouling. Residual chlorine levels in the cooling tower basin will be continuously monitored. System design will provide the capability for automatically stopping the blowdown flow during chlorine applications and for maintaining zero release of residual chlorine until the residual concentration has fallen to an acceptable preset level that assures compliance with state and Federal requirements. The average daily free available chlorine concentration is expected to be less than 0.2 mg/l.

A feasible addition to the chlorination system is mechanical cleaning. As noted in Section 10.5.1.4, mechanical cleaning has limited applications and cannot supersede chlorination. It does permit reductions in the quantity of chlorine applied and would be advantageous in situations where discharged residual chlorine presents a significant environmental concern.

10.5.4 ENVIRONMENTAL COSTS

The effect of the chlorine residual on aquatic life in the Clinch River is the principal environmental concern associated with the CRBRP Biocide System.

Free available chlorine does not present a significant environmental concern as oxidation and dissipation will occur rapidly at the point of discharge to the river. Chlorine demand in the river (in terms of BOD and COD concentrations, from preliminary aquatic baseline survey data) is sufficient to consume the low level chlorine addition ($\leq$ 0.2 mg/l)

well within the near field mixing zone. The 6.3 cfs annual average cooling tower blowdown represents only 0.1 percent of the 4,777 cfs summer river flow and will be significantly diluted within the near field mixing zone.

The most potentially severe effect on aquatic life would result from complexation of the free available chlorine with ammonia-nitrogen that will be present in the plant discharge. Chloramine compounds formed by such a reaction are relatively stable compared to chlorine and are highly toxic to aquatic life. Sufficient ammonia-nitrogen is available from the sanitary waste treatment (0.5 mg/l in 7,000 gpd) and auxiliary steam generator (hydrazine decomposition: 0.5 mg/l NH_3 in 480 gpd when operating) influents to the plant discharge to complex a portion of the available chlorine. An extreme case can be postulated by assuming the remaining chlorine is complexed by the ammonia-nitrogen available in the river before any oxidation or dissipation can occur and the chlorine residual is continuous at 0.2 mg/l. Given these conservative assumptions, the resulting chloramine concentrations in the Clinch River for various flow regimes are presented in Table 10.5-1. A review of the toxicity literature indicates that the chloramine concentrations produced during the typical (flowing water) cases are below the lowest concentrations that have been shown to adversely affect aquatic life.[1] The chloramine concentrations indicative of 29 days of no flow are below reported acutely toxic levels. Sublethal effects (reductions in number of young produced in the amphipod and egg production in the minnow) have been observed at concentrations greater than 0.0034 mg/l and 0.0165 mg/l for an amphipod and minnow species, respectively.[7] Both the extreme case concentrations are below the sublethal effects value for the fish species. Although these concentrations are slightly above the sublethal effects value for the amphipod, the conservatism of this analysis, rarity of 29-day no-flow occurrences and unlikelihood that such an occurrence would coincide precisely with the spawning period all indicate that no measurable adverse effects on benthic life will occur due to the discharge of complexed residual chlorine.

The control of residual chlorine in the cooling tower blowdown will ensure that the CRBRP Biocide System will comply with applicable standards. Further, the foregoing analyses indicate that residual chlorine activity will not adversely affect aquatic life in the Clinch River.

10.5.5 ECONOMIC COSTS

The addition of mechanical cleaning to the CRBRP Biocide System would result in increased capital and operating costs that would not be offset by the reductions in chlorine requirements provided.

10.5.6 COMPARISON OF ALTERNATIVES

As indicated in Section 10.5.4, the environmental costs associated with a "worst" case of continuous discharge of complexed residual chlorine during no-flow river conditions are not significant. Consequently, the intermittent chlorine application method to be utilized by the CRBRP Biocide System will not adversely affect aquatic life in the Clinch River.

Although mechanical cleaning does not offer a measureable environmental advantage over the proposed chlorination system, it would be desirable from a plant performance viewpoint.

Chlorination, with or without supplemental mechanical cleaning, is an environmentally acceptable Biocide System for the CRBRP.

TABLE 10.5-1

CHLORAMINE CONCENTRATIONS IN CLINCH RIVER RESULTING FROM BIOCIDE SYSTEM RESIDUAL CHLORINE DISCHARGES*

Flow Regime Cases	Chloramine Concentration (mg/l)**	River Volume Affected (acre-feet)
Typical Case -- Winter (flow = 5,068 cfs)	0.0023	1.64
Typical Case -- Summer (flow = 4,777 cfs)	0.0030	0.25
Extreme Case -- February (29 day no flow)	0.0045	1.43×10^4
Extreme Case -- July (29 day no flow)	0.0051	1.23×10^4

*Values presented based on Table 10.3-3

**Chloramine concentration is computed as follows:

$$NH_2Cl = (\text{isopleth } \%) \times (0.2 \text{ mg/l } Cl_2) \times (0.725)$$

(0.725 is a stoichiometric factor -- 1.38 moles of Cl_2 are required to produce one mole of NH_2Cl.)

10.6 SANITARY WASTE SYSTEM

A sanitary waste system will be required to provide sewage treatment during normal operation of the CRBRP. It will be a permanent facility designed to process a waste stream that is similar to domestic sewage. Radioactive wastes are not handled by the sanitary waste system.

The average daily sanitary wastewater flow during normal operation will be 7,000 gallons. This is based upon 200 plant personnel and 35 gal/person/day for normal plant operation. Present projected number of plant personnel is 120 persons with a peak manning of 210 men anticipated for annual shutdown. The permanent plant design flow of 8,000 gal/day will be adequate during normal operation and annual shutdown.

Plant sanitary wastes will be processed in a manner that is consistent with applicable State regulations[1] and reflects the goal of reducing environmental impact. Alternatives considered represent a variety of approaches offering different levels of environmental and economic cost.

The selected sanitary waste system for the CRBRP is on-site treatment via a packaged extended aeration/filtration/chlorination facility of 8,000 gpd capacity with liquid effluent discharge to the Clinch River.

Alternative systems considered for processing plant sanitary wastes are:

1. Tap-in to existing treatment facility;
2. Ground discharge;
3. Incineration;
4. Extended aeration/filtration/chlorination;
5. Activated sludge/membrane filtration; and
6. Clarification/filtration/carbon adsorption.

10.6.1 DESCRIPTION OF ALTERNATIVES

10.6.1.1 TAP-IN TO EXISTING TREATMENT FACILITY

An environmentally attractive alternative for plant sanitary waste treatment is to tap-in to an already existing sewage treatment facility. In this manner, use is made of available capability and the potentially adverse environmental effects of construction and operation of an on-site facility are avoided. This alternative is dependent upon the existence of a nearby sewage treatment plant that can accept the additional load without suffering reduced treatment efficiency.

The tap-in scheme would require construction of a pipeline to the proposed treatment plant and sufficient pumping power at the CRBRP.

10.6.1.2 GROUND DISCHARGE

Ground discharge of sanitary wastes possesses several environmental advantages. It utilizes the natural assimilative capacity of soil, eliminating the need for extensive treatment facilities. Energy requirements are low and no effluent is discharged directly into the river.

Successful application of ground discharge requires suitable soil composition and depth such that anticipated waste loadings can be applied without clogging or back-up. Soils subject to short-circuiting with attendant introduction of inadequately treated wastes into ground water supplies must be avoided.[2] Several application techniques can be utilized in a ground discharge treatment system. Notable among these are percolation ponds and spraying.

10.6.1.3 INCINERATION

Incineration of raw sewage provides the highest degree of sludge compaction achievable. The small quantities of dry ash produced considerably lessen the environmental costs associated with the disposal of moisture-laden sludge from conventional processes.

Incineration of raw sewage is preceded by comminution and dewatering to reduce the water content of the sludge feed so that combustion can occur. In the incinerator, fuel (commonly No. 2 oil) is utilized to initiate and sustain burning when the heat content of the sludge is insufficient. Combustion gases are cycled through a stack scrubber prior to atmospheric release to reduce particulate emissions.[3]

10.6.1.4 EXTENDED AERATION/FILTRATION/CHLORINATION

A fourth alternative to off-site treatment, ground discharge, or incineration of sanitary wastes is on-site treatment that produces a liquid effluent environmentally acceptable for discharge to the Clinch River and a sludge for land disposal. In comparison to off-site processing, an on-site treatment facility offers the environmental advantages of more direct control over effluent quality and greater flexibility to changing loads. It does not release airborne particulates or consume water as occurs with incineration and the odor problems that may accompany ground discharge are eliminated.

The extended aeration/filtration/chlorination alternative system provides tertiary level treatment for the CRBRP sanitary wastes. Liquid effluent quality will comply with the EPA guidelines for secondary treatment, Table 10.6-1, and the State of Tennessee effluent quality standards for CRBRP sanitary waste discharges, shown in Table 10.6-2.

Extended aeration provides secondary level treatment. It uses a modification of the diffused air-aerobic digestion process for sewage decomposition and treatment. It functions by maintaining sufficient oxygen, mixing and detention time to allow microorganisms to decompose the treatable wastes. Detection times are much longer than conventional activated sludge (on the order of 24 hours) eliminating the need for primary settling and reducing sludge production.[4] Extended aeration treatment will reduce suspended solids by 65 to 91 percent and biochemical oxygen demand (BOD) by 75 to 95 percent.[3] Filtration of the above effluent will provide tertiary level treatment and ensure that effluent suspended solids content is within permissible levels. The filtration unit utilizes two 100 percent capacity slow sand filters and will be capable of removing 85 percent of the suspended solids from the normal effluent of extended aeration and producing an overall BOD reduction of 95 to 98 percent.

Chlorination of the tertiary treatment effluent provides disinfection for the elimination of water-borne pathogens as required by the State.

10.6.1.5 ACTIVATED SLUDGE/MEMBRANE FILTRATION

The activated sludge/membrane filtration sewage treatment system produces a higher quality effluent than that possible via extended aeration/filtration/chlorination.

Activated sludge is a basic secondary treatment process utilizing biological decomposition of sanitary wastes in an aerobic environment. BOD and suspended solids reduction capability is similar to that of extended aeration.

The higher effluent quality of the activated sludge/membrane/filtration system is accomplished at the tertiary treatment level. Membrane filtration produces an effluent with virtually no suspended solids, BOD of 0-20 mg/l and a "very low" coliform count.[3]

10.6.1.6 CLARIFICATION/FILTRATION/CARBON ADSORPTION

The clarification/filtration/carbon adsorption sewage treatment system also produces a final effluent of higher quality than extended aeration/filtration/chlorination.

Clarification is a secondary level treatment process that utilizes coagulation, flocculation and sedimentation to achieve suspended solids reductions greater than that of conventional biological decomposition systems. Chemical coagulants are added to the wastewater to form small flocs which will settle and are removed in a sedimentation tank. Filtration similar to that employed with the extended aeration system is utilized to polish the clarification effluent.

Activated carbon possesses a very high sorptive capacity for soluble organic matter. The carbon adsorption unit is a tertiary level treatment process that utilizes this capacity to produce a final effluent lower in BOD than that of the activated sludge/membrane/filtration system.

10.6.2 ELIMINATION OF IMPRACTICAL ALTERNATIVES

10.6.2.1 TAP-IN TO EXISTING TREATMENT FACILITY

The employment of this alternative system requires the presence of an existing treatment plant located close enough to the CRBRP that pipeline construction and pumping costs do not become excessive. Additionally, the existing facility must be capable of handling the plant waste load without detriment to its efficiency or effluent quality.

Three sewage treatment facilities in the general vicinity of the CRBRP Site were considered. The AEC Gaseous Diffusion Plant facility located four miles to the north does not have sufficient reserve capacity at this

time. Although it is scheduled for expansion in the near future, dependence on this cannot be advised and the distance is too far to merit further consideration of the diffusion plant facility. The Oak Ridge municipal sewage treatment plant is located 15 miles away and on this basis it is considered too remote to be included as a viable alternative. There is a small treatment plant servicing the Clinch River Industrial Park (at CRM 14.6); however, this facility is not considered a viable alternative because it has an excess capacity of only 3,000 gpd and is not expandable. Consequently, an off-site treatment alternative cannot be considered adaptable for use with the CRBRP.

10.6.2.2 GROUND DISCHARGE

Utilization of ground discharge is predicated on the availability of suitable soil conditions. As the soil in the area of the CRBRP has been determined to be clay to a depth of 20 to 30 feet, this alternative is not considered to be feasible based on the poor absorption characteristics exhibited by clay soils.

10.6.2.3 INCINERATION

Raw sewage incineration is not considered feasible because of a lack of demonstrative applications of this technology and the prohibitively high capital and energy costs involved in a small volume unit.

10.6.3 SPECIFICATIONS FOR REASONABLE ALTERNATIVES

10.6.3.1 EXTENDED AERATION/FILTRATION/CHLORINATION

A schematic diagram of the extended aeration/filtration/chlorination sanitary waste treatment system for the CRBRP appears in Figure 10.6-1. System capacity is 8,000 gpd, a size that provides a reserve margin for

handling peak loads. Packaged extended aeration units are offered by a variety of manufacturers and have been widely employed nationwide for handling small waste volumes.[3,5]

Three units comprise the treatment facility. The extended aeration unit includes the aeration, settling and sludge holding tanks. Sludges will be disposed of off-site by a licensed contractor. Sand filtration utilizes two 100 percent capacity slow sand filters and does not require filter backwashing. Chlorination is by hypochlorite; a 1.0 mg/l residual level will be maintained in the treatment system effluent.

The final effluent from the treatment facility will contain less than 10 mg/l BOD and 5 mg/l suspended solids and will be released to the river through the plant discharge system.

10.6.3.2 ACTIVATED SLUDGE/MEMBRANE FILTRATION

Activated sludge/membrane/filtration sanitary waste treatment system for the CRBRP is designed for a flow of 8,000 gpd. It is estimated to produce a final effluent with 10 mg/l BOD and 1 mg/l suspended solids.

10.6.3.3 CLARIFICATION/FILTRATION/CARBON ADSORPTION

The clarification/filtration/carbon adsorption sanitary waste treatment system for the CRBRP is designed for a flow of 8,000 gpd and is estimated to produce a final effluent with BOD and suspended solids of less than 5 mg/l.

10.6.4 ENVIRONMENTAL COSTS

The principal environmental concern associated with the three sanitary waste systems identified in 10.6.3 is the effect of the liquid effluent discharge on the Clinch River. Effluent quality of the sanitary treatment

system alternatives as compared to EPA guidelines and Tennessee standards is shown in Table 10.6-3. The magnitude of the effects of sanitary discharges can be evaluated by examining the resulting changes in river water quality under various flow conditions.

River water quality changes resulting from the discharges of the sanitary system alternatives are evaluated for four flow regimes and two effluent constituents (BOD and suspended solids) in Table 10.6-4. Increases in BOD levels in the chemical plumes are below the limits of detection for all three alternatives.[6] Reduction in suspended solids concentration are produced as a result of the high quality of the sanitary effluents, Table 10.6-3, compared to the river ambient level of 46 mg/l, Table 2.7-61.

Each of the alternative sanitary waste treatment systems produces an effluent too small in volume and high in quality to be capable of any significant adverse environmental impact on the Clinch River. Each alternative's effluent complies with applicable standards for the chemical constituents examined as shown in Table 10.6-3. Relatively small sludge quantities that are easily processed by the plant solid waste handling facility are produced by each alternative sanitary waste system.

10.6.5 ECONOMIC COSTS

Total monetary cost for the extended aeration/filtration/chlorination system is estimated at $1.50 per 1,000 gallons treated.[3] This treatment facility is a packaged unit that affords easy installation. Reliability is good and the required level of operator attention is low.

Specific monetary costs were not available for the activated sludge/membrane/filtration and clarification/filtration/carbon adsorption systems. However, general cost differences among the three alternatives can be estimated.

The activated sludge/membrane filtration system is more expensive than the packaged extended aeration unit due principally to the higher capital and operating costs of membrane filtration as opposed to sand filtration and chlorination.[3] The reliability of the activated sludge system is lower also as a result of the membrane filtration process. The membrane is subject to physical deterioration and requires continuous monitoring.

Due to the relatively high cost of clarification as a secondary treatment process and the additional expense of carbon reactivation in the tertiary level treatment, the clarification/filtration/carbon adsorption system is the most expensive of the three alternatives.[3,7]

10.6.6 COMPARISON OF ALTERNATIVES

10.6.6.1 DIRECT COMPARISON OF REASONABLE ALTERNATIVES

The environmental costs for the three sanitary waste system alternatives are substantially identical because of the negligible effect of the sanitary discharge on the Clinch River. There is little environmental preference, therefore, for the marginally higher quality effluents of either the activated sludge or clarification alternatives.

The packaged extended aeration facility is economically preferable in terms of monetary cost, ease of installation, reliability and operational experience.

10.6.6.2 REASONS FOR SELECTION OF CHOSEN SYSTEM

The extended aeration/filtration/chlorination system is the selected system for the treatment of sanitary wastes from the CRBRP. It produces a liquid effluent for discharge to the Clinch River that fully complies with the applicable governmental regulations, Section 3.7, and has no

adverse effects on river water quality. Futhermore, the extended aeration facility utilizes a well proven technology, provides reserve capability for peak loads and is economically advantageous.

TABLE 10.6-1

EPA GUIDELINES FOR SECONDARY TREATMENT EFFLUENT QUALITY[8]

	Monthly Average
Biochemical Oxygen Demand (BOD)	30 mg/l
Suspended Solids (SS)	30 mg/l
Fecal Coliform Bacteria	200 per 100 ml
pH	6.0-9.0

TABLE 10.6-2

STATE OF TENNESSEE EFFLUENT QUALITY STANDARDS[1]
FOR THE CRBRP SANITARY WASTES DISCHARGE

	Monthly Average
Biochemical Oxygen Demand (BOD)	30 mg/l
Suspended Solids (SS)	40 mg/l
Residual Chlorine	0.5-2.0 mg/l
Ammonia Nitrogen (as N)	5.0 mg/l
pH	6.0-9.0

TABLE 10.6-3

EFFLUENT QUALITY OF SANITARY SYSTEM ALTERNATIVES*

	EPA Guidelines	Tennessee Standards	Extended Aeration/ Filtration/ Chlorination	Activated Sludge/ Membrane Filtration	Clarification/ Filtration/ Carbon Adsorption
BOD	30 mg/l	30 mg/l	10 mg/l	10 mg/l	5 mg/l
Suspended Solids	30 mg/l	40 mg/l	5 mg/l	1 mg/l	5 mg/l
Residual Chlorine	--	0.5-2.0 mg/l	1.0 mg/l	0	NA**
Ammonia Nitrogen	--	5.0 mg/l	0.5 mg/l	NA**	NA**
pH	6.0-9.0	6.0-9.0	6.0-9.0	6.0-9.0	6.0-9.0

*Monthly averages

**Not available

TABLE 10.6-4

CHANGES IN RIVER QUALITY RESULTING FROM DISCHARGES BY THE SANITARY WASTE SYSTEM ALTERNATIVES

Flow Regime Cases	Affected River Volume** (Acre-feet)	Concentration Increase Over River Ambient Level (%)*					
		Extended Aeration/ Filtration/ Chlorination		Activated Sludge/Membrane Filtration		Clarification/ Filtration/ Carbon Adsorption	
		BOD	SS	BOD	SS	BOD	SS
Typical Case -- Winter (flow = 5,068 cfs)	1.64	0.02	-0.13	0.02	-0.15	<0.01	-0.13
Typical Case -- Summer (flow = 4,777 cfs)	0.25	0.03	-0.18	0.03	-0.19	0.01	-0.18
Extreme Case -- February (29 day no flow)	1.43×10^4	0.05	-0.26	0.05	-0.29	0.013	-0.26
Extreme Case -- July (29 day no flow)	1.23×10^4	0.05	-0.29	0.05	-0.32	0.014	-0.29

*Concentration increases computed as follows:

$$\left[\frac{(F_{BD})(C_A) + (F_S)(C_S)}{F_{BD} + F_S} - C_A\right] \times \text{(Isopleth)}$$

where,

F_{BD} = Cooling system blowdown flow in gpm (see Table 3, Appendix 10.3)

F_S = Sanitary treatment system effluent flow = 5.55 gpm

C_A = Ambient chemical concentration in river (BOD = 3 mg/l, SS = 46 mg/l : Table 2.7-61)

C_S = Sanitary treatment system effluent concentration (see Table 10.6-3)

Isopleth (%) from Table 10.3-3.

**From Table 10.3-3

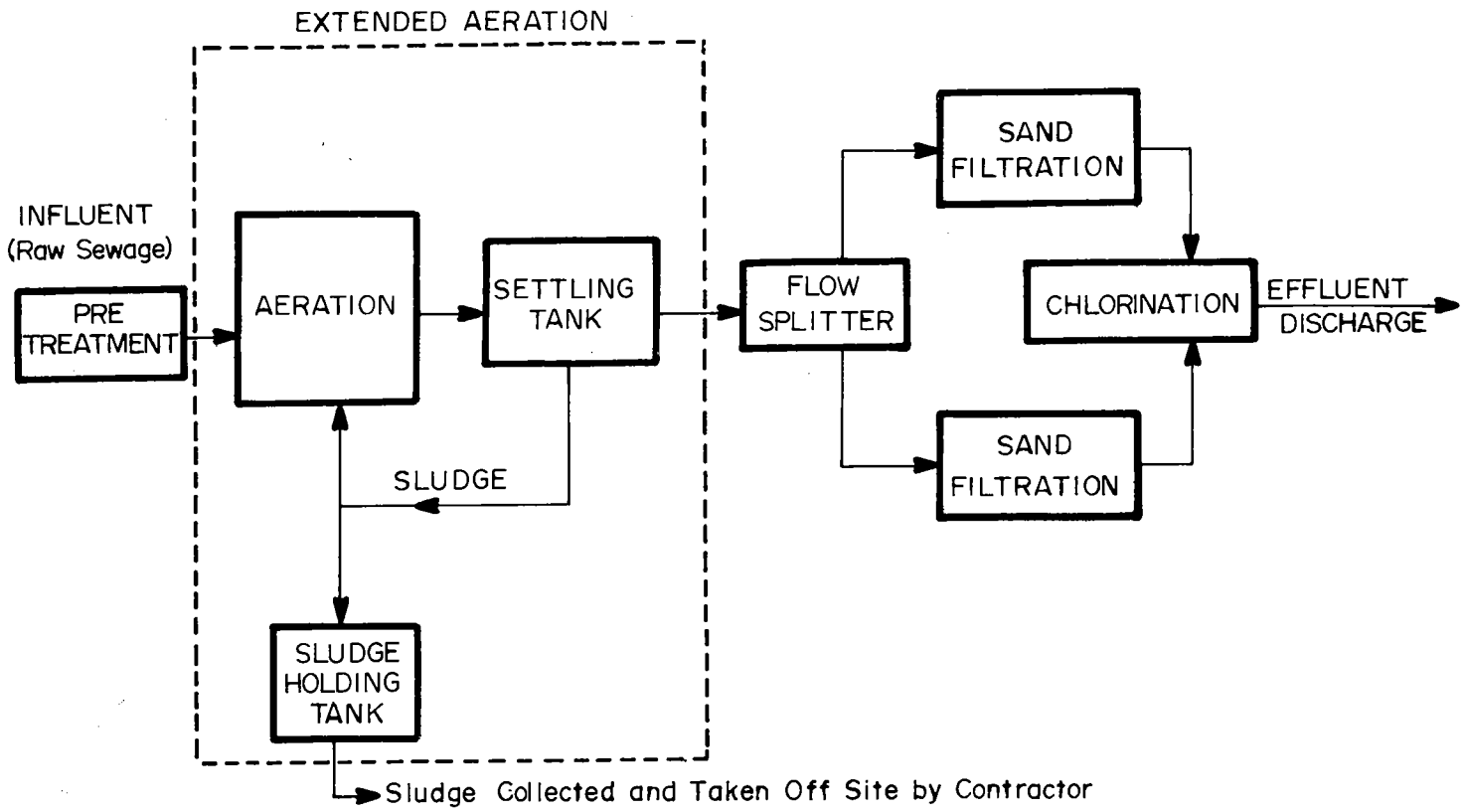

Figure 10.6-1 EXTENDED AERATION/FILTRATION/CHLORINATION SANITARY WASTE TREATMENT SYSTEM

10.7 LIQUID RADWASTE SYSTEM

10.7.1 SYSTEM

The Liquid Radwaste System is designed to process contaminated liquids from the Clinch River Breeder Reactor Plant (CRBRP) prior to reuse or discharge. Design of one subsystem is aimed at no planned release of radioactivity to the environment under normal plant operating conditions. The basic approach is to decontaminate the liquid so that it can be reused, to solidify the resultant concentrated radwaste in cement, to package in disposable drums and to transfer the drums to a licensed AEC contractor for burial. A second subsystem processes low level wastes. The source of the low activity liquid is the plant drains. This activity will be reduced to as small a value as is practicably achievable (never more than permissible levels) even under abnormal plant operating conditions.

10.7.1.1 PURPOSE OF SYSTEM

Major input of radioactive contaminated fluids consists of effluents from the Large Component Cleaning Cell (LCCC) and the Intermediate Component Cleaning Cell (ICCC). Solutions are generated when various components are maintained or replaced. Before maintenance, inspection or disposal of the component can be made, the residual sodium containing tritium, fission products (FP) and corrosion products (CP) must be removed. In some instances high activity levels of fission and corrosion products may be deposited on the equipment surfaces. In these cases, the activity must be removed by acid etching before the maintenance personnel can repair the component.

The process for accomplishing the decontamination is as follows. A component is removed and transferred to an inerted cleaning cell. Moist nitrogen is added to the cell and the sodium coating on the component is

converted to sodium hydroxide. The component is immersed in water and after a suitable time, the water is pumped to the Liquid Radwaste System (LRS). This process is followed by two water rinses of the component. It is presently estimated that at least 294 components will be processed in this fashion during the 30-year life of the plant. Concentration of sodium and radioactivity and the volume of fluid associated with this cleaning process is described in Table 10.7-1. A small quantity, estimated as at least 14 components, will require acid etching following the steam nitrogen reaction and three rinses. The anticipated acid solution is five percent HNO_3. The acid etch process is also followed by two rinses, making a total of six rinses. Volume and concentration of these fluids are also described in Table 10.7-1. Fission product concentrations presented are based on an assumed design value of one percent failed fuel.

The computed concentrations are based on an assumption that all of the sodium and 40 percent of the plated activity on the surface are removed during the first rinse. In subsequent calculations, it is assumed that all of the radioactive elements form soluble salts and that none of these are removed by the filters through which the liquid is pumped.

The final flush of a component surface is used to insure that a component is free of contamination before the component is reused or moved to a facility for repair or inspection. It is assumed, therefore, that when the solutions are reused, the process system restores the fluid to an acceptable purity. The sodium limit is equivalent to 5 ppm Na (as $NaNO_3$) based on the 20 μmhos/cm specific conductance given in F5-1T "Cleaning and Cleanliness Requirements for Nuclear Components".[1]

Based on performing hands-on-maintenance, the residual removable activity should be minimized for direct dose personnel protection. A tentative selection for this requirement is 0.1 disintegrations per second per cubic meter squared (dps/cm^2). The removable (smearable) remains on the component are proportional to the activity concentration of the rinse

solution. In general, one can assume that a one mil film of water remains on the component. If the solution contains 10^{-3} μCi/cc, the surface contamination after evaporation of the film will be about 0.1 dps/cm^2 of beta and gamma radiation.

The average concentration of the sodium and radioactivity being processed and various special processes are presented in Table 10.7-1. As can be seen, the calculated input sodium concentration to the first rinse is variable from about 100 to 600 ppm with a single entry of about 2,500 ppm. Maximum activity concentration occurs when the Intermediate Heat Exchangers (IHX's) are processed. In this case, the concentration is about 19 μCi/cc. The largest sodium concentration occurs when the acid etch solution is neutralized. This is equivalent to 18,000 ppm of sodium.

Low activity waste, which is fed into the Liquid Radwaste System, has activity concentrations which are less than 10^{-4} μCi/cc. Production of these wastes is currently estimated as 850 gpd. This water, some of which comes from personnel showers, will be discharged after decontamination by processing through an evaporator and a demineralizer and will have activity levels which are as low as practicable at the discharge point.

A tentative selection of acceptable activity levels that are less than 2×10^{-8} μCi/cc (excluding tritium) in the effluent stream for discharge has been established.

Federal regulations require that planned releases of liquid wastes be less than the concentrations in effluents to unrestricted areas (discharge to the Clinch River) described in 10 CFR 20. Alternatives considered for the Liquid Radwaste System design are described in the following sections. The alternatives are immediately rejected if they do not meet Federal regulations. Alternatives that do not meet the

plant process requirements are also rejected as discussed in Section 10.7.2. Cost-benefit comparisons are made for the remaining alternatives to support the recommended selection in subsequent sections.

10.7.1.2 IDENTIFICATION OF SELECTED SYSTEM

A flow diagram of the selected design, Alternative 7, is shown in Figure 10.7-1. As shown in this figure, the Liquid Radwaste System consists of two subsystems: an Intermediate Activity System to process liquid radwaste from decontaminating components in the LCCC and ICCC which remove sodium, corrosion products and fission products; and a Low Activity System to process radwaste from plant drains.

The intermediate activity level liquid system collects and processes aqueous effluents from the LCCC (40,000 gallon capacity) and the ICCC (12,000 gallon capacity). Liquids of various quantities are pumped from the cleaning cells through a common header to collection tanks located in the Radioactive Waste Area of the Reactor Service Building (RSB).

While in the collection tanks, the liquid radwaste is recirculated through a filter to remove insoluble solids and the pH is adjusted by the injection of a caustic or an acid solution. The neutralized liquid radwaste is then fed sequentially through the filters and an evaporator for concentration of dissolved solids and then to the demineralizer for purification of the distillate.

Decontaminated distillate is stored in tanks with a total storage capacity of 40,000 gallons. Small volumes of concentrated wastes (~2% of the evaporated volume) generated during evaporation are discharged from the evaporator into a concentrated waste collection tank. The condensate is sampled for radioactivity, for nuclide identity and

chemical purity. Sampling analysis results will determine whether the condensate is adequately decontaminated and available for reuse.

The low activity level system collects and processes the water effluents from the floor drains, shower drains and laboratory drains. Processing of low activity waste includes neutralization if required, anti-foaming, filtration, evaporation and demineralization similar to that described for the Intermediate Activity System.

It should also be noted that the concentrated liquid radwaste, which contains all but a negligible amount of the activity, will be transferred to the Solid Radwaste System which is described in Section 3.5. Concentrated liquid radwaste is solidified in cement and the cement is packaged in drums. The drums are capped, marked, monitored and transferred to a licensed contractor for disposal.

While discharge of liquid wastes to the Clinch River is not expected for the intermediate level activity stream, situations can be postulated which lead to a circumstance in which the requirements for reusable water are not sufficient and release is desirable. To illustrate this circumstance, the assumption is made that 10 percent of the normal inventory of reusable water may be released. Such situations will not be part of normal operating procedure of the CRBRP.

10.7.1.3 IDENTIFICATION OF ALTERNATIVES

There are presently three principal methods used to process and decontaminate liquid waste streams in nuclear power reactors; (1) evaporation; (2) deionization (demineralization); and (3) reverse osmosis. These methods have various cost and performance capabilities which are utilized in the selection of a system design. They are frequently utilized in various combinations to obtain a given performance. Decontamination capability for an individual method is determined by monitoring the ratio

of radioactivity of the feed to the effluent stream. The expected Decontamination Factors (DF) for each method are shown in Table 10.7-2. These estimates are based on experience reported by industry and summarized by the AEC in Docket No. RM-50-2.[2]

Evaporators decontaminate solutions by evaporating water containing little or no radioactivity from the solution. This eventually produces a concentrated salt solution containing most, if not all, of the radioactivity.

Ion exchange media (demineralizers) decontaminate fluids by exchange of the radioactive ions with non-radioactive stable ions of a different chemical species. Performance data on ion exchange are summarized below and DF's are listed in Table 10.7-2. DF's of 10^3 or greater are seldom observed in practice for radioactive species.

The low performance which has been observed for demineralizers (DI) is due partially to the existence of the feed solution of insoluble salts, complex ions, colloidal materials and improper selection. For this study DF's obtained from previous LWR experience will be considered representative of overall performance of demineralizer systems.

Reverse osmosis (RO) decontaminates solutions by permeation of some fraction of the solvent, in this case water, through a membrane leaving a more concentrated solution to be disposed of in some fashion. The concentrate stream varies from one to 50 percent of the input as a function of the feed salt concentration and purity requirements of permeate. DF's for RO units vary by as much as a factor of 15 for different radioactive species. It is reported in Docket RM-50-2 that a 20-stage unit may achieve a DF of 30.

In choosing the alternative designs, an attempt was made to include combinations of evaporation, reverse osmosis and demineralization which

were deemed to improve the overall performance. The alternatives considered prior to the selection of the proposed design are summarized below. A description of the input process solution is given in Table 10.7-1.

10.7.1.3.1 ALTERNATIVE 1 - DIRECT DISCHARGE

Alternative 1, Figure 10.7-2, is a base cost system design for which the capital costs are minimal and the released radioactivity is the highest of the alternative designs. This alternative does not provide for decontamination or other chemical processing of the liquid radwastes prior to discharge. The liquid radwastes in both the Low and Intermediate Activity Systems are filtered and then stored prior to discharge into a diluting stream. Two 20,000 gallon storage tanks are provided so that one may hold the liquid radwaste being analyzed to determine the release rate into an available dilution stream, while the other tank continues to receive incoming liquids. Thus, liquids will be released from the tanks after the chemistry and radioactivity of the solutions have been completely characterized. Since the liquid radwastes will not be processed for reuse, fresh supplies of water are required for each wash of components in the LCCC or the ICCC.

10.7.1.3.2 ALTERNATIVE 2 - REVERSE OSMOSIS AND DEMINERALIZATION

This alternative, shown in Figure 10.7-3, utilizes a reverse osmosis unit and a demineralizer stage to decontaminate liquid radwastes in the Intermediate Activity System. The Low Activity System processing, if necessary, can be carried out by the reverse osmosis and demineralizer units. Concentrated radwaste discharged from the reverse osmosis unit is solidified by addition of cement and disposed of by off-site burial. Contaminated spent resin from the demineralizer is transferred to the solid waste system for packaging and disposal.

Liquid radwaste is monitored for chemical purity and radioactivity at each stage in the processing system. If the monitoring indicates that either the reverse osmosis or demineralizer stages are unnecessary for low activity stream processing then the system provides for by-pass of either or both stages. The Intermediate Activity System will receive acid etch solutions from the LCCC as well as water washes. The system provides for the neutralization of the acid solution prior to processing by the reverse osmosis unit. Neutralization of the fluid before processing by the demineralizer is dependent upon the choice of resin.

When the water has been decontaminated and restored to a quality suitable for reuse, it is transferred to a storage tank and then reused as needed.

10.7.1.3.3 ALTERNATIVE 3 - SINGLE STAGE DEMINERALIZATION

This alternative, shown in Figure 10.7-4, uses demineralizers to process liquid radwastes in both the Intermediate Activity and Low Activity Systems. A separate demineralizer for each system provides complete separation of the low and intermediate activity streams. The Intermediate Activity System has provision for neutralizing the acid etch solutions from the LCCC. The contaminated spent resins from the demineralizers are transferred to the Solid Radwaste System for packaging and disposal. When the water has been decontaminated and restored to a quality suitable for reuse it is transferred to storage tanks and then reused as needed.

10.7.1.3.4 ALTERNATIVE 4 - SINGLE STAGE EVAPORATION

This alternative, Figure 10.7-5, employs a single evaporator to decontaminate liquid radwaste in both the Intermediate and Low Activity Systems. The Intermediate Activity System has provision for neutralizing the acid etch solutions from the LCCC prior to evaporation. Concentrated waste discharge from the evaporator is solidified by the addition of cement and disposed of off-site.

The distillate is monitored for radioactivity and chemical quality, transferred to a storage tank and reused or reprocessed as required.

10.7.1.3.5 ALTERNATIVE 5 - REVERSE OSMOSIS, DEMINERALIZATION AND EVAPORATION

In this alternative, liquid radwaste in the Intermediate Activity System is neutralized and filtered, if necessary and then processed by reverse osmosis, as shown in Figure 10.7-6. The purified stream from the reverse osmosis unit flows to a demineralizer and then is stored for reuse. Concentrate from the reverse osmosis unit flows into an evaporator where it is distilled. The distillate is fed to a storage tank for reuse. Concentrated waste from the evaporator is solidified by the addition of cement and is disposed of off-site.

The liquid radwaste in the Low Activity System is filtered, processed in the demineralizer and stored for reuse. Contaminated spent resin from the demineralizer is transferred to the solid waste system for packaging and disposal.

Note that a single demineralizer is used to process liquid radwastes from both the Low and Intermediate Activity Systems.

10.7.1.3.6 ALTERNATIVE 6 - EVAPORATION AND DEMINERALIZATION

This alternative utilizes an evaporator and a demineralizer in the Intermediate Activity System and a demineralizer in the Low Activity System, as shown in Figure 10.7-7. A transfer system has been included to enable processing the liquid from the low level collection tank through the Intermediate Activity System evaporator if such processing is required. Concentrated radwaste from the evaporator is solidified by the addition of cement and disposed of off-site by burial. Contaminated spent resin from the demineralizers is transferred to the solid radwaste system for packaging and disposal.

Liquid radwaste is monitored for chemical purity and radioactivity at each stage in the processing system. If the monitoring of the liquid in the low level activity collection tank indicates that the liquid waste cannot be decontaminated by the demineralizer, then the evaporator in the Intermediate Activity System can be used. Neutralization of the acid etch water is provided for in the Intermediate Activity System prior to processing in the evaporator and demineralizer.

When the liquid radwastes have been decontaminated and the water has been restored to a quality suitable for reuse, the water will be transferred to a storage tank and reused as needed.

10.7.1.3.7 ALTERNATIVE 7 - EVAPORATION AND DEMINERALIZATION LOW AND INTERMEDIATE LEVELS

In this alternative, a set consisting of an evaporator and a demineralizer is utilized in the intermediate radwaste system and a second set consisting of an evaporator and a demineralizer is incorporated for use in the low activity radwaste system. Figure 10.7-1 is a schematic diagram of this alternative. The presence of the additional evaporator on the Low Activity System provides adequate process capabilities in the event that: (1) evaporator is not operational; (2) both the intermediate and low level streams require coincident processing; and (3) capacity of both evaporators are needed to process a single stream. Concentrated radwaste from the evaporators is solidified by the addition of cement and disposed of off-site by burial. Contaminated spent resin from the demineralizers is transferred to the Solid Radwaste System for packaging and disposal.

10.7.1.3.8 LAUNDRY ALTERNATIVE

There are two alternative designs for the processing of laundry wastes. In the first, the liquid waste is filtered, monitored and discharged into a diluting stream. In the second, the filtered liquid effluent is

processed by reverse osmosis. The purified stream flows to a monitoring tank for discharge into a diluting stream. Concentrate from the reverse osmosis stream flows into the Low Activity System for further processing and discharge or reuse.

At present no laundry waste processing system is contemplated. Clothing will be laundered at the Oak Ridge laundry facility.

10.7.2 ELIMINATION OF IMPRACTICAL ALTERNATIVES

There are input concentrations for sodium and radioactivity that each of the Intermediate Activity System design alternatives must process to values sufficiently low so that the level is suitable for reuse or discharge. The evaluation of the potential alternatives utilizes a realistic treatment of (1) equipment capabilities and (2) the capabilities needed for processing.

It was assumed that the numbers for equipment DF's in Docket RM-50-2 are applicable for radioactive species. The highest sodium and radioactive concentration have been used in comparing the alternative process capability. This involves an estimated 14 out of 308 or five percent of the components and about 10 percent of the water being processed. It has been assumed in all of the activity concentration calculations that 80 percent of the total deposited activity is removed during the steam-nitrogen and subsequent three water rinses. All of the sodium is assumed to be removed in the first rinse.

The processed and 10-percent-contingency effluent concentrations and the limiting criteria presented in a previous discussion in Section 10.7.1.1, are presented in Table 10.7-3. Review of the table will show Alternatives 1, 2, 3 and 5 are eliminated as not responsive to any of the applicable reuse or discharge criteria. Alternative 4 is rejected as not meeting the reuse criteria for sodium activity.

10.7.3 SPECIFICATIONS FOR REASONABLE ALTERNATIVES

Process requirements have been included in the discussion of the system under Section 10.7.1. The alternatives that can meet these requirements are 6 and 7. Characteristics for these alternatives have been described in Section 10.7.1.

10.7.4 ENVIRONMENTAL CONCERNS

The selected Liquid Radwaste System, Alternative 7, described in Section 10.7.1.2, and Alternative 6, described in Section 10.7.1.3, are designed to decontaminate, store and reuse or discharge liquid radwastes. These designs are capable of minimal release of radioactive effluents into the environment. When it becomes necessary to dispose of excess liquids, the system provides for the decontamination by filtration, evaporation and demineralization of the liquid prior to release, under conditions that meet the design objective of releasing as little radioactivity as practicable. Solid radioactive wastes will be packaged and disposed of by off-site burial.

10.7.5 ECONOMIC CONSIDERATIONS

An estimate of capital and operating costs is presented for the two alternatives satisfying the process requirements for reuse and compliance with Federal Regulations in the case of release to the discharge stream. For low salt concentrations, the operating costs for demineralizers and evaporators are similar. The cost for a high salt load, rather than an average load, is shown in Table 10.7-4 and was used to illustrate the expected use where demineralizer resin costs are different than those of an evaporator. Operating costs associated with processing 40,000 gallons of neutralized acid which produces a solution containing 18,000 ppm of sodium are shown in the table. Capital cost, shown in the last line of Table 10.7-4, includes all of the equipment shown in the flow diagrams

discussed in Section 10.7.1.3. Processing (material) cost is shown in the third line and includes estimates of resin replacement and energy costs. The next line, called Liquid Waste, gives an estimate of the volume of waste produced by the given design alternative and the cost of solidifying the given volume. Cost for disposal of the required volume of resins which will have to be replaced after a batch is processed is also shown. The operating cost includes the sum of the processing, solidification and shipment costs of the liquids and resins.

A base case was made which considers solidifying all of the processed etch solution. The volume to be solidified from this single batch is about one-half of that amount which would be produced during the life of the plant if evaporators are used. Total operating cost for evaporators over the life of the plant is estimated to be $160,000 which is considerably less than the cost to process a single batch of high sodium concentration waste with demineralizers or reverse osmosis units. Table 10.7-5 is a summary of the essentially identical operating and processing costs for Alternatives 6 and 7 for all of the fluids over the life of the plant.

10.7.6 COMPARISON OF ALTERNATIVES

In Table 10.7-3, the process and 10 percent contingency effluent concentrations are summarized. Only Alternatives 6 and 7 meet the process reuse and discharge stream requirements imposed.

Alternative 6 uses an evaporator and demineralizer for processing the intermediate activity radwaste and a demineralizer for processing low activity streams. As seen in Figure 10.7-7, this is a closed system. This design was not selected because operating conditions may occur such that some low level activity requires higher decontamination than can be obtained with a demineralizer. When this occurs, some activity from the Intermediate System, including tritium, will eventually be

recycled into the Low Activity System streams including personnel showers. Another reason for selecting Alternative 7 is that an additional evaporator will provide backup in the event that one evaporator is not operational. Additionally, use of another evaporator results in added flexibility in the event that: (1) both the intermediate and low level stream needs processing; and (2) both evaporators are needed to process a single stream. Comparisons of Alternatives 6 and 7, the two practical alternatives, are presented in Table 10.7-7. The qualitative assessments are based on discussion already developed in this section.

The additional capital cost of Alternative 7 achieves a processing capability of the intermediate stream even in the case of one non-operational evaporator and assures that there will be no direct personnel contact with the Intermediate Liquid Radwaste System. On an "as low as practical basis" and based on the entire discussion of demineralization, reverse osmosis and evaporation, the chosen system for the CRBRP is Alternative 7, described in Section 10.7.1.2 and shown in Figure 10.7-1.

10.7.7 BALANCE OF PLANT CONSIDERATIONS

Tritium, which enters the main stream in the steam generator, becomes chemically bonded to form tritiated water vapor. The steam is condensed and the water contains tritium. Any outflow from the steam water system contains tritiated water, which cannot be separated from non-tritiated water. Methods of handling of the associated liquid wastes are considered in this section.

10.7.7.1 IDENTIFICATION OF ALTERNATIVES

10.7.7.1.1 STORAGE

This proposed alternative would store the associated BOP tritium wastes on-site for the life of the plant. If a net outflow of one gpm for

leakage from the feedwater and condensate system is assumed, a storage capacity of 400,000 gallons per year for 30 years is required. This alternative study assumes storage would be provided in 12 tanks, each with a capacity of 1×10^6 gallons measuring 65 feet diameter by 40 feet high.

10.7.7.1.2 DIRECT DISCHARGE AFTER DILUTION

The direct discharge alternative assumes a net outflow of one gpm bleed from the feedwater and condensate system and design release of 1.5 Curies per day of tritium. This bleed is combined with the cooling tower blowdown annual average flow of 2,700 gpm mixed with the feedwater and condensate system bleed flow.

10.7.7.1.3 ADDITIONAL DILUTION

Final radioactivity concentration of the liquid waste entering the Clinch River depends upon the concentration of liquid and the dilution flow. For a fixed concentration of the waste system, a larger dilution flow rate reduces the final concentration.

Source of the dilution water for the alternative considered is the Clinch River. Total dilution flow assumed is 55,000 gpm. A cooling tower blowdown of 2,700 gpm provides part of the dilution flow. The remaining 52,300 gpm is taken from the river, mixed with tritiated condensate and the cooling tower blowdown and discharged into the river. A dilution water pumphouse containing two 100-percent capacity pumps is provided. Suction is taken directly from the river. The intake and discharge structures are increased in size to handle the extra dilution flow.

A dilution Water Pumphouse, measuring 40'-6" by 25', will be required to assure proper operation of the dilution water pumps. Two 100-percent capacity (55,000 gpm at 15 ft TDH) vertical, wet pit pumps will be

utilized to supply water to a common dilution header for proper mixing of the plant blowdown and to immediately discharge back to the river.

The blowdown line from the circulating water pumphouse will be a 10-inch line which will connect to a 54-inch line at the dilution water pumphouse. This line will run adjacent to the east exterior wall of that structure and discharge at the river bank.

10.7.7.1.4 PACKAGING

In the packaging alternative, the liquid waste is combined with a solidifying agent. The resultant solid is shipped off-site to an approved burial site.

In the alternatives study, an outflow rate of one gpm is assumed. Liquid waste would be produced at a rate of 1440 gpd. The liquid is assumed to be mixed in 55-gallon drums with Cyanoloc (a typical solidifying agent) at a ratio of 3:1 to form a solid. Disposal of the daily inventory requires 36.7 drums.

10.7.7.2 ENVIRONMENTAL CONCERNS

The direct environmental concern involves the release of the tritium and resulting concentrations to which the public will be exposed. Releases from the BOP tritium for the four alternatives considered are given in Table 10.7-7. All release alternatives considered are seen to result in releases within a few percent of 10 CFR Part 20 limits with the storage and packaging alternatives resulting in zero release (excluding any leakage). Source terms utilized in the calculations are presented in Table 10.7-8.

There are additional environmental concerns associated with the alternatives under discussion. An examination of the alternatives study should

not omit consideration of effects associated with transportation or tank leakage inherent in particular systems. Such considerations apply to the packaging and storage alternatives respectively. An additional environmental concern is final deposition of wastes associated with both these alternatives. Implicit in the added dilution alternative is the environmental impact associated with the increased use of the Clinch River and increased significance in intake and discharge effects.

10.7.7.3 ECONOMIC CONSIDERATIONS

Economic considerations and comparisons of the alternatives under consideration are presented in Table 10.7-9. Incremental costs are provided with the direct discharge alternative serving as the base case. Direct discharge results in no modification to the balance of plant design, therefore no additional cost is incurred. The added dilution alternative is shown to result in higher costs mainly associated with capital costs of pumps and structural costs. The storage alternative results in very high incremental capital costs due to the tank provision. Estimated costs are $4.5 million. The packaging alternative is shown to be the most expensive of all alternatives. An economic cost of over $14 million is required for operating costs associated with pumps, chemicals, drums, shipping and burial of wastes.

10.7.7.4 COMPARISON OF ALTERNATIVES

A qualitative assessment of the direct discharge, added dilution, storage and packaging alternatives are presented in Table 10.7-10. All alternatives are seen to satisfy the 10 CFR 20 limits for associated releases. The storage alternative is an expensive alternative requiring resolution of the matter of final deposition of the stored liquids. The packaging alternative is also an expensive alternative requiring resolution of an ultimate disposal problem. The added dilution alternative involves an increased capital cost relative to the direct discharge

alternative while significantly perturbing the BOP design in terms of intake and discharge impacts and use of the Clinch River water.

Direct discharge of BOP liquid tritium constitutes an alternative that complies with 10 CFR 20 limits while neither incurring associated waste disposal problems nor perturbing balance of plant design. As such, it offers definite advantages over other reasonable alternatives and is the method to be utilized for the CRBRP.

TABLE 10.7-1

ESTIMATED PROCESS INPUT DATA

Number of Components	Volume* Requirement Gallons (30 years)	Type of Process	Concentration (ppm Na)	Concentration## (μCi/cc) FP & CP
308**	1.1×10^6	1st rinse	282	4
294+	674,000	1st rinse	300	1.3×10^{-4}
14++	436,000	1st rinse	244	5.0
14	436,000	Acid etch	18,000	2.5
4∇	160,000	1st rinse	592	18.8
1∇∇	40,000	1st rinse	2,580	0.35
303#	900,000	1st rinse	135	1

*Volumes for process described does not include subsequent rinses

**Total first rinses

+Total of non-acid etch first rinses

++Acid etch first rinses

∇IHX

∇∇IRP - Intermediate Rotating Plug

#Low sodium first rinses

##1.0% defective fuel assumed

TABLE 10.7-2

LIQUID RADWASTE - DECONTAMINATION
FACTORS USED IN SOURCE TERM CALCULATIONS

	Decontamination Factors For Activity				
Demineralizers	I_2	Cs,Rb	Y	Mo	Others
PWR					
Mixed-bed (H^+ -OH^- form, clean waste)	10^2	2	1	1	10^2
BWR					
Mixed-bed (H^+ -OH^- form, clean waste)	10^2	10	1	1	10^2
PWR and BWR					
Mixed-bed in evaporator condensate	10	10	1	1	10
Removal of Mo and Y by plating out, filtration, demineralization, etc.	--	--	10	10^2	--
EVAPORATORS					
Waste	10^3	10^4	10^4	10^4	10^4
REVERSE OSMOSIS	All 1.5 per stage				

TABLE 10.7-3

CONCENTRATION OF SODIUM AND ACTIVITY

	Concentration After Processing					Discharge After Dilution		
Alternative	Process*	Sodium PPM	Limiting Criteria (PPM)	Activity (μCi/cc)	Limiting Criteria (μCi/cc)	Activity** (Ci)	Activity+ (μCi/cc)	Limiting Criteria (μCi/cc)
	Initial	18,000	5	18.8×10^{0}	.001	2860	18.8×10^{0}	2×10^{-8}
1	None	18,000		18.8×10^{0}		2860	8.9×10^{-4}	
2	RO 90% DI	180		1.4×10^{0}		20	6.2×10^{-6}	
3	DI	1800		18.8×10^{-1}		28.6	8.9×10^{-6}	
4	EVAP	1.8		18.8×10^{-4}		0.0286	8.9×10^{-9}	
5	RO 90% DI 10% EVAP			1.4×10^{0}		20	6.2×10^{-6}	
6	EVAP 99% DI	0.18		1.9×10^{-4}		0.00286	8.9×10^{-10}	
7	EVAP 99% DI	0.18		1.9×10^{-4}		0.00286	8.9×10^{-10}	

	DF's Utilized	
	Na Conc.	Activity
DI	10	10
RO (1 stage)	10	1.5
EVAP	10^{4}	10^{4}

*Percentages quoted indicate percent of fluid proceeding to stage indicated

**Alternatives 2 thru 7 assume a 10% release of the effluent stored

+A dilution stream of 3.2×10^{12} cc per year is assumed based on 2380 gpm cooling tower blowdown and a 68% plant capacity factor

TABLE 10.7-4

COMPARISON COST OF PROCESSING 40,000 GALLONS AT 18,000 ppm Na

	Alternative 6	Alternative 7
Low Activity Process*	DI	EV + DI
Int. Activity Process	EV + DI	EV + DI
Liquid Waste (Gallons)	6×10^3	6×10^3
Resin Solid Waste (FT^3)	60	60
COSTS ($,000)		
Processing**	0.35	0.35
Liquid Waste+	12	12
Resin Waste++	0.05	0.05
Operating	12	12
Capitol	746	1,137

*DI - Deionizer
EV - Evaporator

**Includes only replacement resin cost and energy cost

+To concrete and ship low activity waste multiply x 3 for high activity waste

++Resin disposal

TABLE 10.7-5

OPERATING COSTS FOR 30 YEARS
(Alternatives 6 or 7)

Material and Energy	3.5
Disposal:	
Neutralized acid etch waste*	130.0
Liquid other than acid etch waste**	30.0
Total	165.0

*Based on total acid volume of 4.4×10^5 gallons and Na conc. of 18,000 ppm

**Approximately 4.4×10^6 gallons water

TABLE 10.7-6

COMPARISON OF PRACTICAL ALTERNATIVES

	Alternative 7*	Alternative 6
Compliance with "as low as practicable" releases guidelines	Yes	Yes
Compliance with Na concentration limits for process reuse	Yes	Yes
Compliance with activity limits for process reuse	Yes	Yes
Operating Cost	Base	Similar
Capital Cost	Base	Lower
Potential Direct Personnel Contact with Intermediate Liquid Radwaste Fluid	No	Yes
Intermediate Stream process capability in event of one non-operational evaporator	Yes	No

*Choice for CRBRP

TABLE 10.7-7

RELEASE OF RADIOACTIVITY

Releases	Direct Discharge	Added Dilution	Storage	Packaging
Curies/Day*	1.5×10^{0}	1.5×10^{0}	0	0
Concentration at Site Boundary $\frac{Ci}{cc}$	1.0×10^{-10}	5×10^{-12}	0	0
Fraction of 10CFR20 limit, $3 \times 10^{-9} \frac{Ci}{cc}$	0.3×10^{-1}	1.7×10^{-3}	0	0

*1.75 Ci/day x .68 capacity factor = 1.19 expected, 1.5 design

TABLE 10.7-8

SOURCE TERMS

Plant Capacity Factor	0.68
Net Outflow	1 gpm
Radioactivity Input to Steam Water System (100% Power)	1.75 Curies/day
Cooling Tower Blowdown	2,700 gpm

TABLE 10.7-9

ECONOMIC COSTS
(Millions of Dollars)

	Alternates			
	Direct Discharge	Added Dilution	Storage	Packaging
Capital Costs				
Tanks	Base	0	4.5	0
Pumps	Base	0.25	0	0
Structural Costs	Base	0.52		
Subtotal	Base	0.77	4.5	0
Operating Costs				
Pumps*	Base	0.07	0	0
Chemicals**	Base	0	0	5.33
Drums+	Base	0	0	4.16
Shipping++	Base	0	0	2.51
Burial∇	Base	0	0	2.37
Subtotal	Base	0.07	0	14.37
Total Costs	Base	0.84	4.5	14.37

*Investment cost of power $/kw = 317

**$13.30/drum

+$10/drum

++$6.30/drum

∇$5.88/drum

TABLE 10.7-10

COMPARISON OF ALTERNATIVES

	Direct Discharge	Added Dilution	Storage	Packaging
Compliance with 10 CFR 20	Yes	Yes	Yes	Yes
Capital Cost	Base	High	Very High	Zero
Operating Cost	Base	Similar	None	Very High
Associated Waste Disposal Considerations	None	None	Yes	Yes
Perturbation to balance of Plant Design	None	Significant	Significant	None
Transportation Considerations	None	None	None	Yes

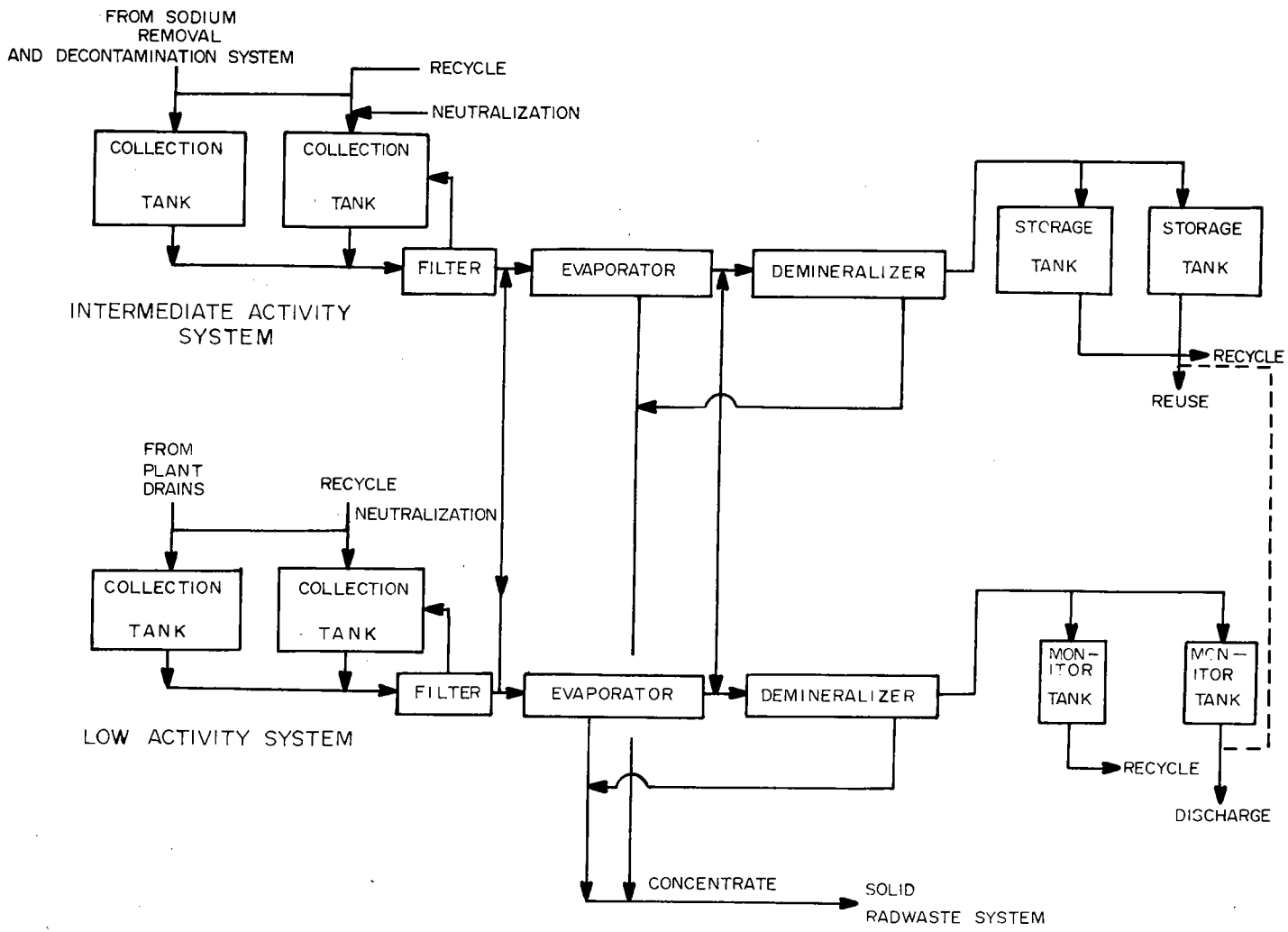

Figure 10.7-1 LIQUID RADWASTE SYSTEM FLOW DIAGRAM

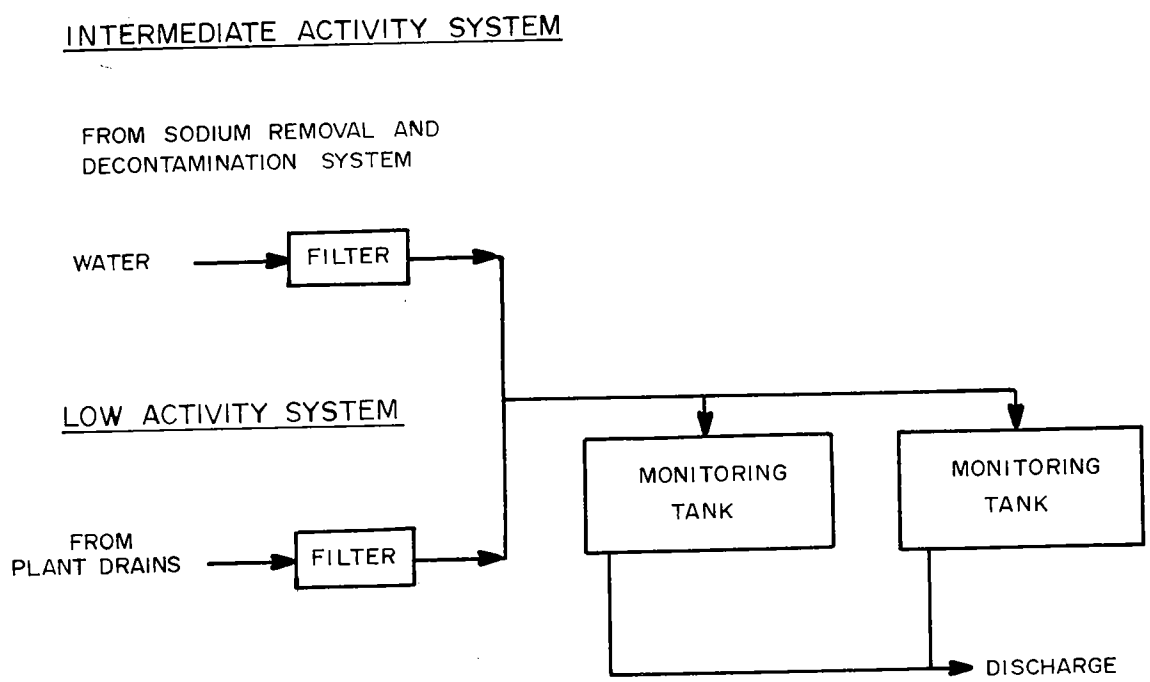

Figure 10.7-2 ALTERNATIVE 1, DISCHARGE OF RADWASTE WITHOUT PROCESSING

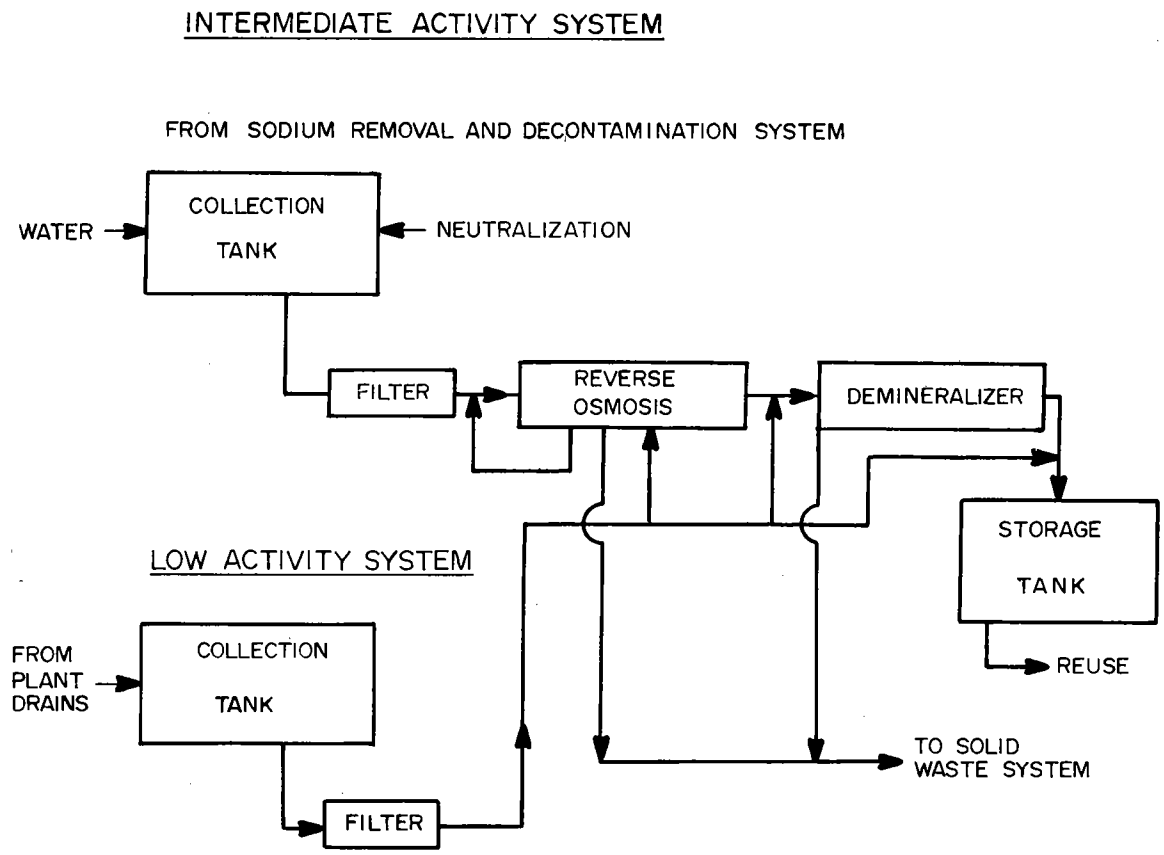

Figure 10.7-3 ALTERNATIVE 2, REVERSE OSMOSIS AND DEMINERALIZATION

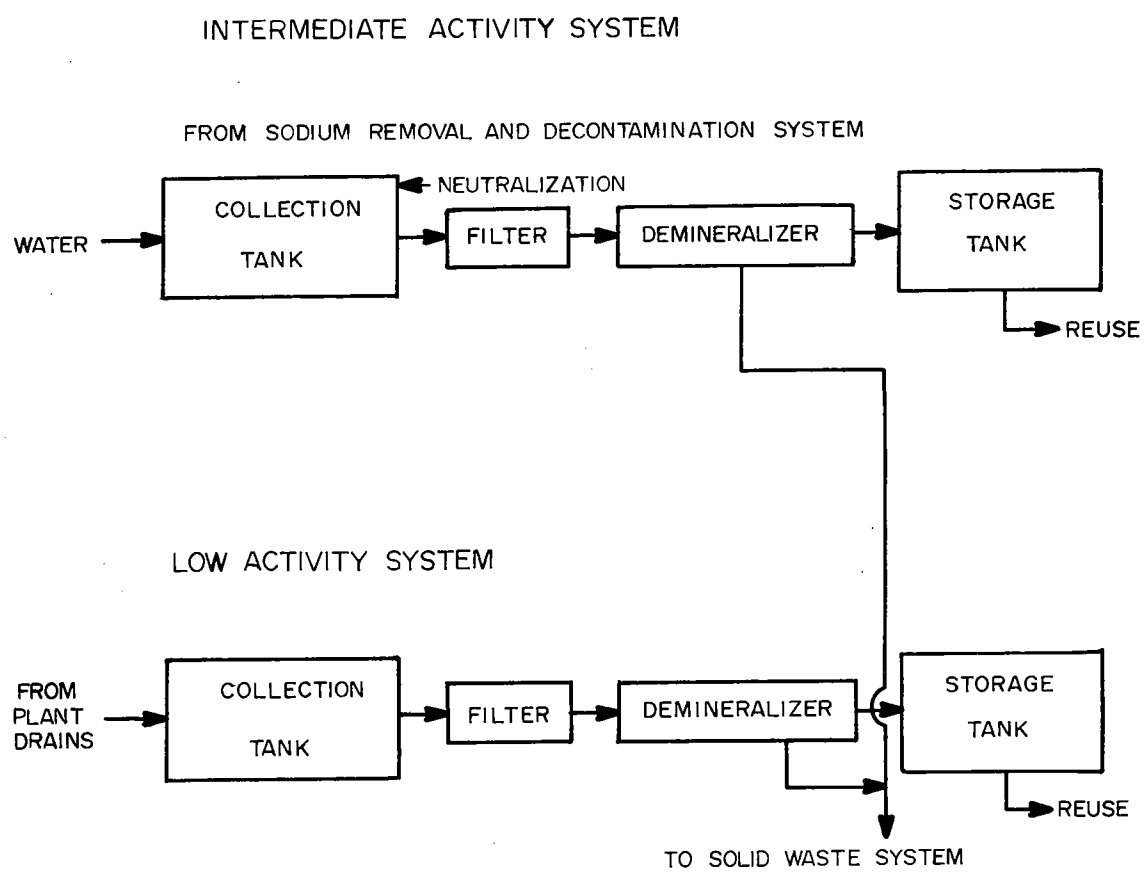

Figure 10.7-4 ALTERNATIVE 3, DEMINERALIZATION

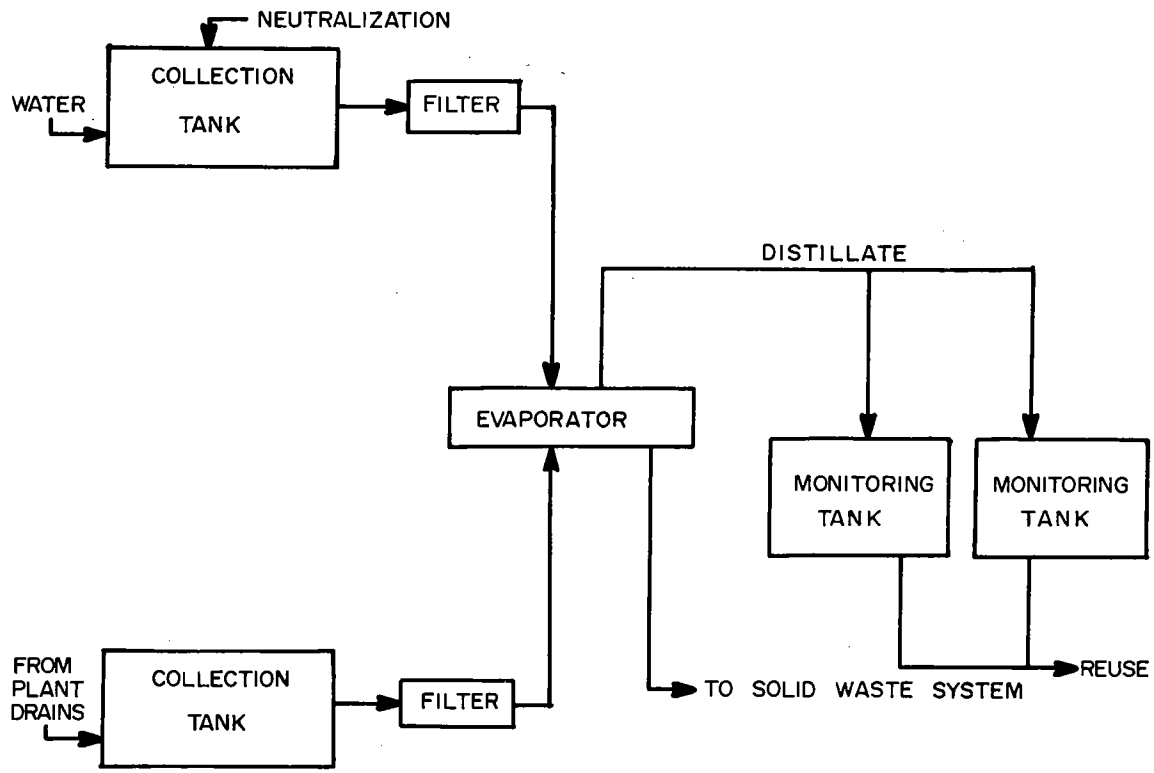

Figure 10.7-5 ALTERNATIVE 4, EVAPORATION

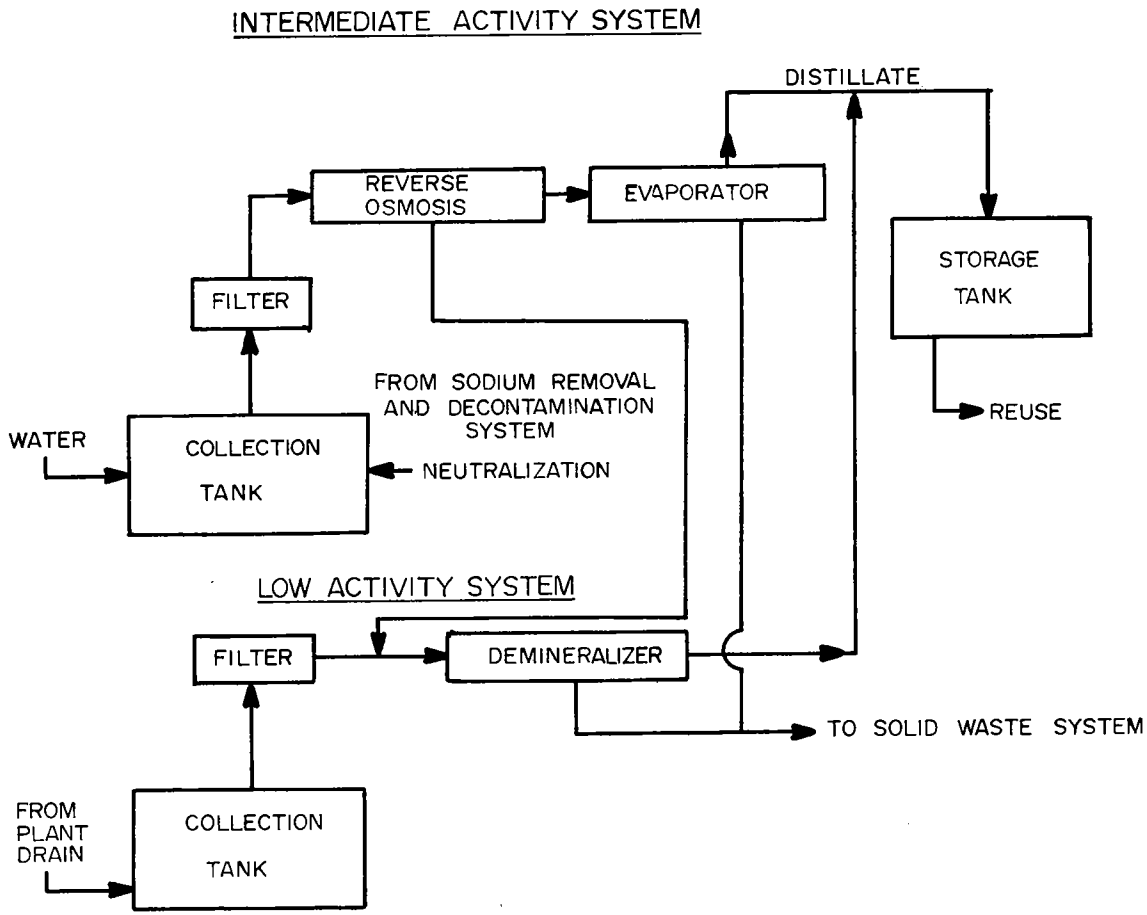

Figure 10.7-6 ALTERNATIVE 5, REVERSE OSMOSIS, EVAPORATION AND DEMINERALIZATION OF RADWASTE

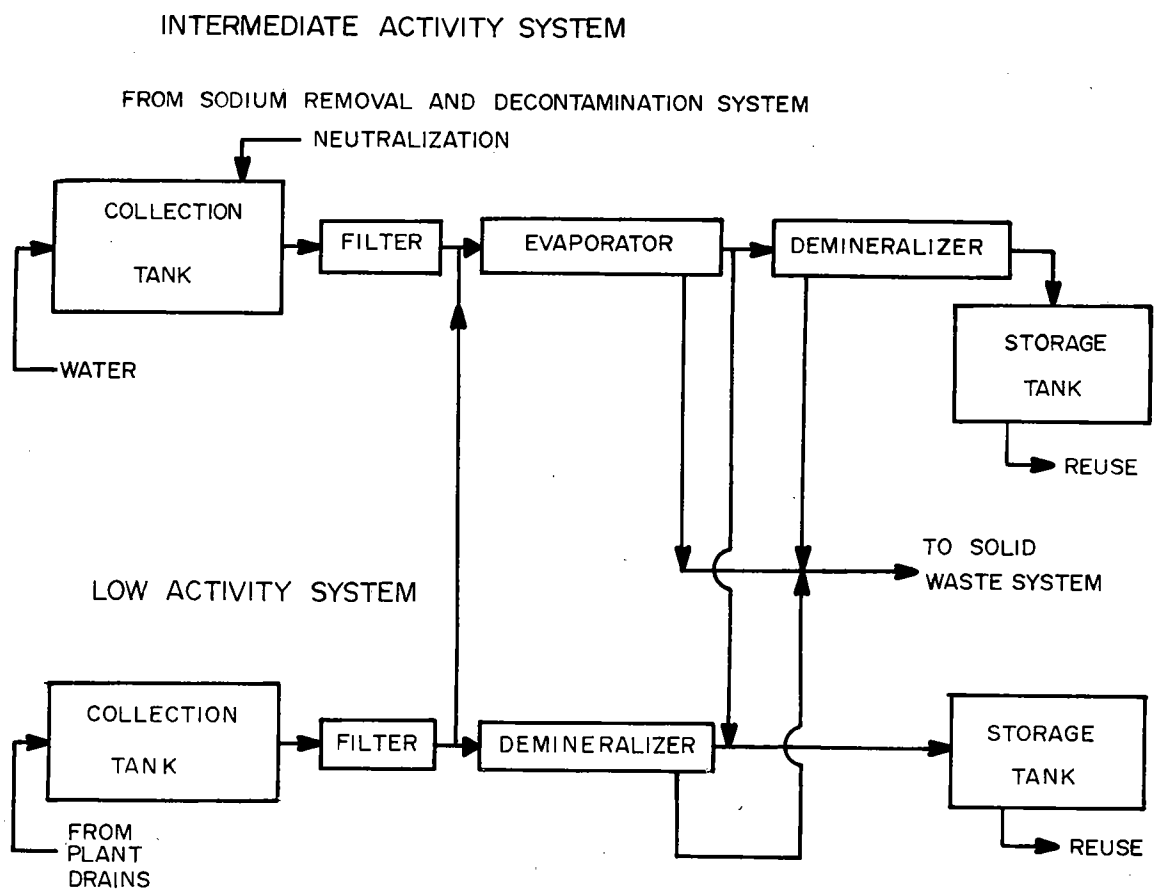

Figure 10.7-7 ALTERNATIVE 6, EVAPORATION AND/OR DEMINERALIZATION

10.8 GASEOUS RADIOACTIVE WASTE PROCESSING

Gaseous radioactive waste products generated in the CRBRP are to be contained and processed to assure that any gaseous radioactive release from the plant will not have an adverse effect on the environment. The processing system will therefore be designed to minimize such releases from the plant and at all times assure that such releases are within the established permissible levels.

Radioactive gases are produced in the reactor fuel, in the sodium coolant and in the atmosphere surrounding the reactor. Isotopes of the noble gases, krypton and xenon, are produced within the fuel assemblies as fission products and may be released to the primary sodium and spent fuel storage sodium as a result of fuel cladding defects. For the analysis presented below and as a plant design basis, it is assumed that one percent of the fuel has cladding defects and the release to the coolant is in accordance with the Kayser empirical formulation.[1] The expected fuel cladding defect rate, based on LWR experience, is significantly lower; therefore, considerable conservatism exists in the design calculation.

Noble gas, Ne-23, is generated in the sodium in the reactor core as a result of the (n,p) reaction on Na-23. Radioactive argon (Ar-39 and Ar-41) is produced in the reactor from the (n,γ) and (n, 2n) reactions with the argon cover gas and (n,p) reactions with impurities K-39 and K-41, in primary sodium.

Radioactive isotopes of carbon and nitrogen are generated in the nitrogen atmosphere surrounding the reactor guard vessel by (n,p) and (n,γ) reactions with nitrogen.

Tritium is generated in the boron carbide control rods by various neutron reactions and in the fuel by ternary fission, from which it diffuses

through the cladding materials to the primary sodium (100% release is assumed, again adding conservatism to the calculation). Tritium is also generated in the primary sodium due to the (n,α) reaction with lithium-6 impurity. Some of the tritium in the primary sodium will diffuse through the Intermediate Heat Exchanger (IHX) tubing and primary piping into cell atmospheres. Once in the intermediate system, some of that tritium will diffuse into the steam generator tubing and a small amount into the intermediate system piping cells. For purposes of added conservatism and for evaluation of the study of alternatives, 100 percent release of these sources of tritium is assumed.

To optimize the selection of a gaseous waste processing system on a cost-benefit basis, various alternatives were analyzed. As a starting point for the alternatives study, a gas radwaste system was considered which would allow the CRBRP to meet a site boundary dose rate requirement. The initial system considered is the one developed for use at Fast Flux Test Facility (FFTF). The alternatives study was therefore a comparison of the site boundary dose rates and system costs for variations in the FFTF gas radwaste system.[2] System variations included the use of argon or helium cover gas, zero to 100 percent recycle of the cover gas, control of the various leakage paths and the effects of the use of various gas treatment units.

The production rates of radioisotopes of concern, assuming loss by decay only, are discussed in various subsections of Section 10.8. Values for these production rates are given in Table 3.5-6. Potential Site boundary rates for radioactivity from the various loss paths are presented in Table 10.8-1. The Site boundary χ/Q value used in this study is 2.5×10^{-5} sec/cubic meter consistent with the Site boundary (1,800 ft) and the average annual χ/Q for the SSW sector. This sector was chosen since it is expected to experience the least dispersion on an annual basis. The values reported in Table 10.8-1 assume the use of an efficient cover gas clean-up system with each loss being released from the

plant without further processing (only volumetric delay times within the reactor buildings are considered).

Two gas processing subsystems are used in the CRBRP. One subsystem, the Cell Atmosphere Processing Subsystem (CAPS), processes radioactive gases prior to their discharge from the plant. The Radioactive Argon Processing Subsystem (RAPS) processes the reactor and primary pumps cover gases. In the selected configuration, shown in Figure 10.8-1, RAPS is designed for 100 percent recycle of the cover gas argon.

Three classes of alternates were examined in detail relative to their impact on the release of radwaste gas and plant cost; a once through flow for the reactor cover gas, a recirculating argon reactor cover gas and a recirculating helium reactor cover gas. Since the gas radwaste systems considered consist of various configurations of processing components, a large number of cases for each class were examined for the varying processing component configurations and leakage controls. Results of the most promising options are reported in the alternatives study.

10.8.1 DESCRIPTION OF ALTERNATIVES

A number of possible alternatives were considered in the design selection study for the gas radwaste systems. All of the unit operations considered for gas processing utilize available technology.

The concentration of radionuclides in the various gas streams, whether for recylce or release, depends primarily upon such factors as; the appearance rate for each radionuclide in the system, the decontamination factors achieved in the primary processing systems, the release or leakage from the system and radioactive decay. Processing alternatives considered in the design selection study can be categorized as: (1) the cover gas (argon or helium) and the degree of recycle; (2) the treatment units used in the primary processing systems; and (3) the control placed

on the various gas streams (discharge to Heating and Ventilation or process in one of the primary processing systems).

10.8.1.1 PRIMARY PROCESS SYSTEMS

The Radioactive Argon Processing Subsystem (RAPS) processes cover gases from the primary sodium circuit. These gases contain essentially the entire inventory of radioactive gases in the plant (excluding those left in the fuel assemblies) and while RAPS does not discharge gas directly to the environment, leakages from various seals in the system can occur and can affect the design requirements for CAPS.

10.8.1.1.1 CAPS

CAPS is designed to process the gaseous effluent from cells and spaces that are subject to potential contamination by radioactive gases. The processed effluent leaving CAPS is released to the control exhaust facility of the Heating and Ventilation System (H&V).

CAPS is divided into two main sections, the inlet complex and the processing section. The inlet complex collects the various influent streams, filters the gas to remove particulate material and passes the gas to a compressor and surge tank prior to its injection into the processing section. Removal of the radioactive gas by the processing section occurs as a result of the selected unit processing operation and by radioactive decay as a result of delay times within processing components. The degree of removal depends upon the processes and components selected, and is discussed in detail in later sections.

10.8.1.1.2 RAPS

RAPS is designed to process highly radioactive cover gas from the primary sodium system. In the selected RAPS configuration all the processed

argon is recycled, although varying degrees of gas replacement have been analyzed. As with CAPS, RAPS is divided into two main sections, the inlet complex and the processing section. The RAPS inlet complex serves the same function as in CAPS. The purpose of the RAPS processing section is similar to that of CAPS, its performance depending upon the processes and components selected.

10.8.1.2 COVER GAS ALTERNATIVES

Cover gas alternatives include the possible use of either argon or helium as cover gas. Degree of recycle affects both dose rates and system costs, therefore alternatives studied included both gases with varying degrees of recycle for the argon case. Since helium is identified as a national resource, details of the helium-once-through option were not considered, gas utilization being too high. Three classes of alternatives are reported: (1) argon once-through for the reactor cover gas; (2) argon reactor cover gas with varying degrees of recycle; and (3) helium reactor cover gas.

In the argon once-through option no cover gas is recycled, all the gas being bottled for disposal.

In the other argon reactor cover gas options considered, the cover gas is processed and varying amounts of gas are periodically bottled for disposal or are discharged.

Helium reactor cover gas options are similar to the argon reactor cover gas options. However, since there is an increased capability of separating radioactive noble gases from the helium, no helium bottling cases were considered (100% recycle of helium in all options considered).

10.8.1.3 GAS LEAKAGE CONTROL

Various alternatives are available to collect and process gas leakage:

1. Primary Pump Purge Leakage Control - Design of the primary pumps permits the collection and processing of the gas that is used to purge the pump seals. The purge gas passes through the oil seal and is led to a separator which removes oil mist from the gas. The gas is then fed to RAPS; and
2. Head Loss Control (Reactor Buffer Seal and Reactor Cover Gas Leakage) - Reactor buffer seals recycle gas and the cover gas can leak into the reactor head access area. Head access area control could be added by enclosing the head access area and processing the gas atmosphere in CAPS. This option is discussed in Section 10.8.3.

10.8.2 ENVIRONMENTAL COST

10.8.2.1 RELEASE OF RADIOACTIVE GASES

Release of radioactive gases for the system options considered are summarized in Table 10.8-2. These options are:

1. FFTF developed system;
2. A system in which no argon is recycled but rather is used on a once-through basis;
3. A system similar to System 1 except helium is used as cover gas and the pump seal purge is processed by CAPS rather than being directly discharged to H & V;
4. A system similar to System 1 except the pump seal purge is recycled to RAPS and a tritium removal unit is added to CAPS;
5. System 4 with head loss control.

These systems are discussed in detail in Section 10.8.3.1.

10.8.2.2 WASTES PRODUCED BY ALTERNATIVE SYSTEMS

Gas radwaste systems considered will produce radioactive and non-radioactive wastes. These include cell atmosphere gases (nitrogen and air), cover gases in those cases where recycle is less than 100 percent, radioactive liquids and solids and various non-radioactive waste materials.

10.8.2.2.1 RADIOACTIVE BY-PRODUCTS

The purpose of the Gaseous Radwaste System is to process radioactive gases so that any radioactivity released is as low as practicable. In performing this function, certain radioactive by-products are produced. These must be considered an environmental cost imposed by the gas radwaste system alternatives.

Radioactive wastes can be categorized as follows:

1. Radioactive Gas Waste - In several of the options, gas containing radioisotopes of argon and krypton is bottled. Quantities produced and the frequency of shipment will depend upon the option selected and the operating modes used. Bottling of gas waste in the alternatives studied is not an item of discussion which distinguishes any alternative as being clearly suitable or unsuitable as the system of choice;
2. Radioactive Liquid Waste - All options include a dryer in CAPS to reduce the water content of the process gas to a dew point of -100 degrees F. Total rate of liquid waste generation (and the only routine one for the gas radwaste system) is estimated to be six pounds per day. Tritium content of the water will depend on whether or not a tritium oxidizer is included in the processing stream.

When a tritium oxidizer is included (as in the selected configuration), the tritium content of the water waste is estimated to be 0.02 Ci/lb H_2O; and

3. Radioactive Solid Waste - Radioactive solid waste is produced by the gaseous radwaste system. This includes spent absorber, loaded gas filters, vapor traps and failed components such as compressors and heat exchangers.

10.8.2.2.2 NON-RADIOACTIVE MATERIALS

Only non-radioactive wastes generated on a routine basis are nitrogen from cryogenic cooling operations and certain cell purges, and vapor traps from the Intermediate Heat Transport System. Wastes generated through component failure and the need to replace them would be from such items as valves and liquid gas storage vessels. The total weight (and volume) of this type of component is small; therefore, details of these wastes are not included.

10.8.3 COMPARISON OF ALTERNATIVES

10.8.3.1 DIRECT COMPARISON OF ALTERNATIVES

10.8.3.1.1 SYSTEM 1 - FFTF

System 1 is essentially identical to the gas radwaste system developed for use in the FFTF. The cover gas diffusion leakages, the buffered seal leakage and the primary pump seal purges are released directly to the H & V System for discharge without processing (except for cell delay). The reactor cover gas is processed in RAPS; first, using cryogenic delay beds, and then, using a cryostill. The recycled argon is mixed with makeup gas in the recycle gas storage vessel and is then fed to the reactor and primary pumps cover gas spaces. Primary piping leakages, process component leakage and various cell purges are processed

in CAPS; first, in a dryer to remove water vapor, and then, in cryogenic delay beds. Using CRBRP design basis parameters, the estimated Site boundary dose rate is 0.62 mrem/yr. Estimated capital cost of the system is $3,300,000 and the estimated operating cost is $18,000 per year. Operating costs include only those costs directly associated with operation of the system. Such costs as return of capital investments are not included.

10.8.3.1.2 SYSTEM 2 - ONCE-THROUGH ARGON

In System 2 fresh argon is used. After its passage through the reactor or primary pump, the argon is bottled for disposal. In this system, the cover gas diffusion losses and the buffered seal leakage is discharged through the H & V discharge without further processing. Pump purge, primary piping and processing component leakages and the cell purges are processed through CAPS. For this system, extended delay beds (nominally -300°F) were selected primarily to assure low release rates of radioactive (R/A) noble gases. Estimated site boundary dose rate for System 2 is 0.21 mrem/yr. Capital cost of this system is lowest of all the systems estimated ($3,120,000) because no RAPS processing is utilized. High operating cost, $3,156,000 per year, is related to the high cost of purchasing, bottling and disposing of the argon.

10.8.3.1.3 SYSTEM 3 - HELIUM

System 3 is similar to the modified FFTF design (System 4) in that pump purges are processed in RAPS rather than being processed in CAPS or discharged directly to H & V. Cryogenic or room temperature absorption beds are used in RAPS to remove essentially all noble gas activity from the recycle helium. Primary piping and processing component leakages and cell purges are processed; first, in a tritium removal unit and then in delay beds. Estimated site boundary dose rate if 0.19 mrem/yr.

Estimated operating cost ($26,000 per year) is slightly higher than the comparable argon system (System 2) because there are higher costs related to bottling and disposal of more R/A noble gases.

Helium Research and Development effort can be categorized as a need for study in at least three areas: (1) vapor trap performance tests for both continuous flow trap and filter vapor trap; (2) seal leakage rate tests; and (3) verification of absorption coefficients. The total cost of such a program is estimated to be $1 million.

10.8.3.1.4 SYSTEM 4 - MODIFIED FFTF (SELECTED FOR CRBRP)

System 4, Figure 10.8-1, is similar to the FFTF system[1] except the pump seal purges are processed in RAPS and a tritium removal unit is added to CAPS. The tritium removal unit consists of a tritium oxidizer, a condenser and a molecular sieve dryer. In the tritium oxidizer tritium is oxidized to a tritiated water. The dryer removes water to a dew point of -100 degrees F, effectively decontaminating this gas stream of tritium. The dryer is periodically regenerated; the tritiated water is processed in the liquid radwaste system. Estimated capital cost is $3,650,000 and the estimated operating cost is $20,000 per year. With the exception of the FFTF system, this system has the lowest overall cost. Estimated Site boundary dose rate is 0.21 mrem/yr. Low Site boundary dose rate and low overall costs are the reasons for the selection of this system for CRBRP.

10.8.3.1.5 SYSTEM 5 - MODIFIED FFTF + HLC

System 5 is similar to System 4 except that reactor head access area loss control is added. Estimated site boundary dose rate is .0036 mrem/yr.

Cost associated with the addition of head loss control is significant in both its operational cost and capital cost impacts. Capital cost

investment for the head cavity supports, seals, etc. is estimated to be $2 million. This figure is conservative in not taking into account the necessity for head compartment cooling systems. Effect of head loss control on operating costs can be estimated by assuming a one day per year additional down time for refueling (8 hrs-estimated time removal of head; 8 hrs-estimated time replacement of head; 8 hrs-estimated time for leak testing procedures). Estimated annual cost of this additional down-time is $50,000/year.

These estimated costs for the addition of head loss control will be characteristic of their use in association with any of the alternatives under consideration. As such, the economic impact of HLC will be significant. Alternative 5 to Alternative 4 comparison is offered as representative of the effect of head loss control on the cost of radwaste systems.

10.8.3.2 BASIS FOR CHOICE OF SELECTED SYSTEM

The choice of the radwaste system is based on utilization of a system that will be consistent with the requirements resulting in an "as low as practicable" Site boundary dose rate for normal operations.

Alternatives were compared in their ability to satisfy that requirement at a reasonable economic cost. A summary of the costs of each alternative is presented in Table 10.8-3. The alternative selected, System 4 - the modified FFTF system, results in a low Site boundary dose rate (0.21 mrem/yr) at a cost comparable to or favorable with other options.

Figure 10.8-2 shows a comparison of costs and estimated Site boundary dose rates. As can be seen, the only option capable of significant reduction in the Site boundary dose rate involves enclosing the head access area (System 5).

Relative assessments of the most promising of all the alternatives considered are presented in Table 10.8-4. It is seen that the "FFTF" and the "modified FFTF" alternatives have the most favorable assessments. On an "as low as practicable" basis the "modified FFTF" was selected as the Gas Radwaste System. The Site boundary dose rate is reduced by a factor of three at a cost of $400,000 when the two most favorable systems are compared.

Incorporated in Figure 10.8-2 is a value of 110 millirem/yr as an estimate of natural background radiation at the Clinch River Site, as discussed in Section 2.8. The magnitude of this number compared to the alternative gaseous radwaste systems considered graphically illustrates the need for the balance between the cost consideration of the particular alternative system and its impact on the environment of the CRBRP surrounding area relative to other radiological contributors.

10.8.3.3 DESIRED SYSTEM BASED ON ALTERNATIVES STUDY

10.8.3.3.1 CONTROL OF RELEASES

The CRBRP is following the "as low as practicable" guideline for the evaluation of alternative systems. One of the purposes of the alternative study was to identify leakage paths and assess their effects on Site boundary dose rates. As can be seen in Table 10.8-1 for the design basis case, the most significant potential Site boundary dose rates are associated with unprocessed primary piping losses, RAPS piping and processing component leakages, primary pump seal purges, cover gas losses through reactor seals, and to a much lower extent, buffered seal gas leakage and Intermediate Heat Transport System losses. The alternative study has shown that normal releases can be effectively and economically controlled.

Control of the resulting Site boundary doses to a factor of about 5,000 lower than 10 CFR 20 limitations is achievable. Control of cover gas

through reactor seals and buffered seal gas by the enclosure of the reactor head access area and the subsequent processing of the head access area gas results in reduction of Site boundary doses already well below Federal regulations but it imposes economic impacts on the plant in both operating and capital cost areas. The head loss control alternative was not chosen for purposes of a gaseous radwaste alternative on the basis of as low as practicable considerations.

An additional consideration relative to the anticipated Site boundary dose rate is that over 85 percent of the Site boundary dose rate is associated with three fission gas radioisotopes of reactor cover gas diffusing through various head seals. Radioisotopes, Xe-135, Kr-87 and Kr-88, have sufficiently short half-lives that if the mean seal residence time for the cover gas is one day rather than the assumed (and highly conservative) five minutes, the design basis Site boundary dose rate would be reduced by a factor of 8.5. Further, it has been assumed the reactor would be operating continuously with one percent failed fuel. The design basis assumption that one percent of the fuel could have cladding failures is extreme; a more realistic value would be a value of 0.1 percent. Therefore, the Site boundary doses presented for all alternatives are highly conservative estimates.

10.8.4 BALANCE OF PLANT CONSIDERATIONS

Tritium, produced in the fuel and control rods, is present in the steam-water system as a result of its diffusivity through stainless steel; it is conservatively assumed to be in the form of tritiated water. The condenser off-gas system removes non-condensable gases (vapors) from the condensing steam. Water vapor including tritium present in the off-gas flow constitutes the only expected gaseous release contribution from the balance of plant (BOP). Selection of a BOP radwaste system design is based on meeting an "as low as practicable" philosophy regarding the release of any radioactivity. For all alternatives in any event

considered, the BOP contribution to the plant releases will be well within a few percent of maximum permissible levels (10 CFR 20).

10.8.4.1 IDENTIFICATION OF ALTERNATIVES

10.8.4.1.1 DIRECT DISCHARGE

In this alternative, the gaseous moisture waste is removed with the non-condensable gases by mechanical vacuum pumps and is directly discharged into the atmosphere.

10.8.4.1.2 STORAGE OF CONDENSER OFF GASES

In this alternative, the off-gases removed from the condenser are compressed and stored in pressurized tanks. Assuming a flow rate of seven scfm for the condition when a vacuum is held in the condenser and an operating factor of 85 percent of the off-gas system, the resultant quantity of gas generated over a 30-year design life is 1×10^8 standard cubic feet. A base case assumed for the storage is 90 spherical tanks each 60-feet in diameter and at a pressure of 136 psig.

10.8.4.1.3 DISCHARGE AFTER COOLING

Condenser off-gases leaving the vacuum pumps are saturated with tritiated water vapor. By cooling the gases, the saturation pressure of the water vapor is reduced and part of the radioactivity is removed in the condensing liquid. Two versions of this alternative are considered. In one version the off-gas is refrigerated to 35 degrees F; in the other, the off-gas is desiccated to a dewpoint of -40 degrees F.

<u>Cooling to 35 degrees Fahrenheit</u>

The condenser-off gases (7 scfm) are cooled from a normal temperature of 130 degrees F to 35 degrees F causing some of the tritiated water

vapor to condense. The gases discharged from the vacuum pumps are cooled by an additional wet gas chiller which rejects heat to an air cooled refrigerated system. The cooled off gases with a fraction of the tritiated water vapor remaining is then discharged. The condensate is recycled to the hotwell.

Cooling to -40 degrees Fahrenheit

The condenser vacuum pump exhaust (7 scfm) is passed through a moisture trap, a low leakage compressor, an after cooler, a condensate separator, an entrainment separator and a desiccant dryer. Bottoms from all components are returned to the condenser hotwell and the dried gas is exhausted to the atmosphere.

10.8.4.2 ENVIRONMENTAL CONCERNS

The direct environmental concern involves the release of the tritium and resulting concentrations and the dose to which the public will be exposed. Releases from the BOP for the three alternatives considered are given in Table 10.8-6. All release alternatives considered are seen to result in releases well within the 10 CFR 20 limits with the storage alternative resulting in zero release (except for tank leakage). Source terms utilized in the calculations are presented in Table 10.8-5.

An additional environmental concern applied to the alternatives under discussion is the subject of land use. For the base case considered, utilizing storage of condenser off-gas, an area of approximately 8,100 square feet every year would be required. There is no such land usage requirement associated with the direct release or cooling concepts. The storage alternative also presents an environmental consideration related to the final disposal of the 1×10^8 scf of stored gas and the possibility of tank failure and resultant releases.

10.8.4.3 ECONOMIC CONSIDERATIONS

Economic considerations and comparisons of the alternatives under consideration are presented in Table 10.8-7. Incremental costs are provided with the direct discharge alternative serving as the base case.

Direct discharge results in no modification to the BOP design, therefore, no additional cost is incurred. Cooled discharge is shown to result in potentially higher capital and operating costs for tanks and compressors for the extra cooling equipment, especially for cooling to -40 degrees F. Significant economic costs relative to either cooling or direct discharge are incurred with the storage alternative. High capital and operating costs for tanks and compressors are associated with the storage alternative. Estimated incremental costs are $50 million relative to the direct discharge alternative.

10.8.4.4 COMPARISON OF ALTERNATIVES

A qualitative assessment of the storage, cooling and direct discharge alternatives based on the data presented in this section are shown in Table 10.8-8. All alternatives are seen to satisfy the 10 CFR 20 limits for associated releases. The storage alternative is an expensive alternative, requiring potentially substantial land utilization and requiring resolution on the matter of final deposition of the stored gases. The cooled discharge alternatives result in an associated by-product of tritiated liquid. Ultimate disposition of this product liquid must be considered in the overall assessment of this alternative.

Direct discharge of gaseous tritium constitutes an alternative that satisfies 10 CFR 20 limits while having neither associated waste disposal considerations nor perturbing BOP design. In addition, there is no potential land use factor associated with this alternative. As such, it offers definite advantages over other reasonable alternatives for BOP related releases considered and is the method to be utilized by the CRBRP.

TABLE 10.8-1

SITE BOUNDARY WHOLE BODY DOSE RATES FOR UNPROCESSED RELEASES*

Leakage Path**	Site Boundary Whole Body Dose Rate (mrem/yr)	Major Contributor
Cover Gas Losses Through Reactor Seals	0.20	Mixed Gases
Buffered Seal Gas Leakage	0.002 - 0.10	Mixed Gases
Pump Purge Leakage	0.40	Mixed Gases
Primary Piping Losses	0.75	Tritium
RAPS Piping and Process Component Leakage	0.5	Mixed Gases
CAPS Piping Leakage	Low+	Mixed Gases
Intermediate System Losses	0.001	Tritium

*Assumes the use of an efficient cover gas clean-up system. Site boundary dose rates are calculated assuming only volumetric delays in the reactor buildings.

**The leakage paths listed are those which the gas radwaste alternatives presented should address.

+Less than 0.001

TABLE 10.8-2

RELEASE OF RADIOACTIVITY FOR VARIOUS ALTERNATIVES

System	Dose Rate at Site Boundary (mrem/yr)		
	Noble Gas	Tritium	Total
FFTF	0.603	0.015	0.618
Argon, Once-through	0.208	0.001	0.209
Helium	0.188	0.001	0.189
Modified FFTF*	0.211	0.001	0.212
System 4 + HLC	0.0022	0.0014	0.0036

*System selected for CRBRP

TABLE 10.8-3

MONETARY COSTS FOR VARIOUS OPTIONS

System	Cost (1974 Dollars) Capital ($000)	Operating ($000/yr)	Total Over Plant Life ($000)
FFTF	3,300	18	3,840
Argon, once through	3,120	3,156	97,800
Helium	4,420*	26	5,200
Modified FFTF**	3,650	20	4,250
System 4 + HLC	5,830	70	7,930

*Includes $1 million R&D effort

**System selected for the CRBRP

TABLE 10.8-4

COMPARISON OF ALTERNATIVES

	Modified FFTF	Argon - Once Through	Helium	FFTF	Modified FFTF + HLC
Capital Costs	Base	Similar	High	Similar	Very high
Operating Costs	Base	Very high	Similar	Similar	High
Availability of Technology	Yes	Yes	Additional R + D Required	Yes	Yes
Wastes Generated	Base	Similar	Similar	Similar	Similar

TABLE 10.8-5

BOP RELATED RELEASES - SOURCE TERMS

Plant Capacity Factor	0.68
Vacuum Pump Operating Factor	0.85
Radioactivity Input to Steam Water System (100% Reactor Power)	1.75 Curies/Day
Condenser Off Gas Removal	7 SCFM
Continuous Blowdown from Steam Water System	1 gpm

TABLE 10.8-6

BOP RELEASE OF RADIOACTIVITY

	Alternates			
Releases	Direct Discharge	Cooled Discharge 35°F	Cooled Discharge -40°F*	Storage
Curies/Day	6.9×10^{-3}	2.7×10^{-4}	6.6×10^{-7}	0
Millirem/Year At Site Boundary	3.4×10^{-3}	1.3×10^{-4}	3×10^{-7}	0
Percent of 10 CFR 20	0.6×10^{-3}	2.6×10^{-5}	6×10^{-8}	0

*-40°F is the dewpoint at the desiccator operating pressure of 96 psig

TABLE 10.8-7

ECONOMIC COSTS*

	Alternates			
	Direct Discharge	Cooled Discharge 35°F	Cooled Discharge -40°F	Storage
Capital Cost				
Tanks	Base	0	0.010	50
Compressors	Base	0	0.060	0.06
Other Equipment	Base	0.006	0.030	0
Subtotal	Base	0.006	0.090	50.06
Operating Costs**				
Compressor Operation	Base	0	0.001	0.001
Subtotal	Base	0	0.001	0.001
Total Cost	Base	0.006	0.091	50.061

*Millions of dollars

**Based on investment cost of power $/kw = 317

TABLE 10.8-8

COMPARISON OF BOP TRITIUM ALTERNATIVES

	Direct Discharge	Cooled Discharge 35°F	Cooled Discharge -40°F	Storage
Release compatibility with 10 CFR 20 limits	Yes	Yes	Yes	Yes
Potential land use impact	None	None	None	Significant
Capital cost	Very low	Low	High	Very high
Operating cost	Very low	Very low	Very low	Very low
Associated Waste disposal considerations	No	Yes	Yes	Yes
Perturbation to balance of plant design	None	Yes	Yes	Yes

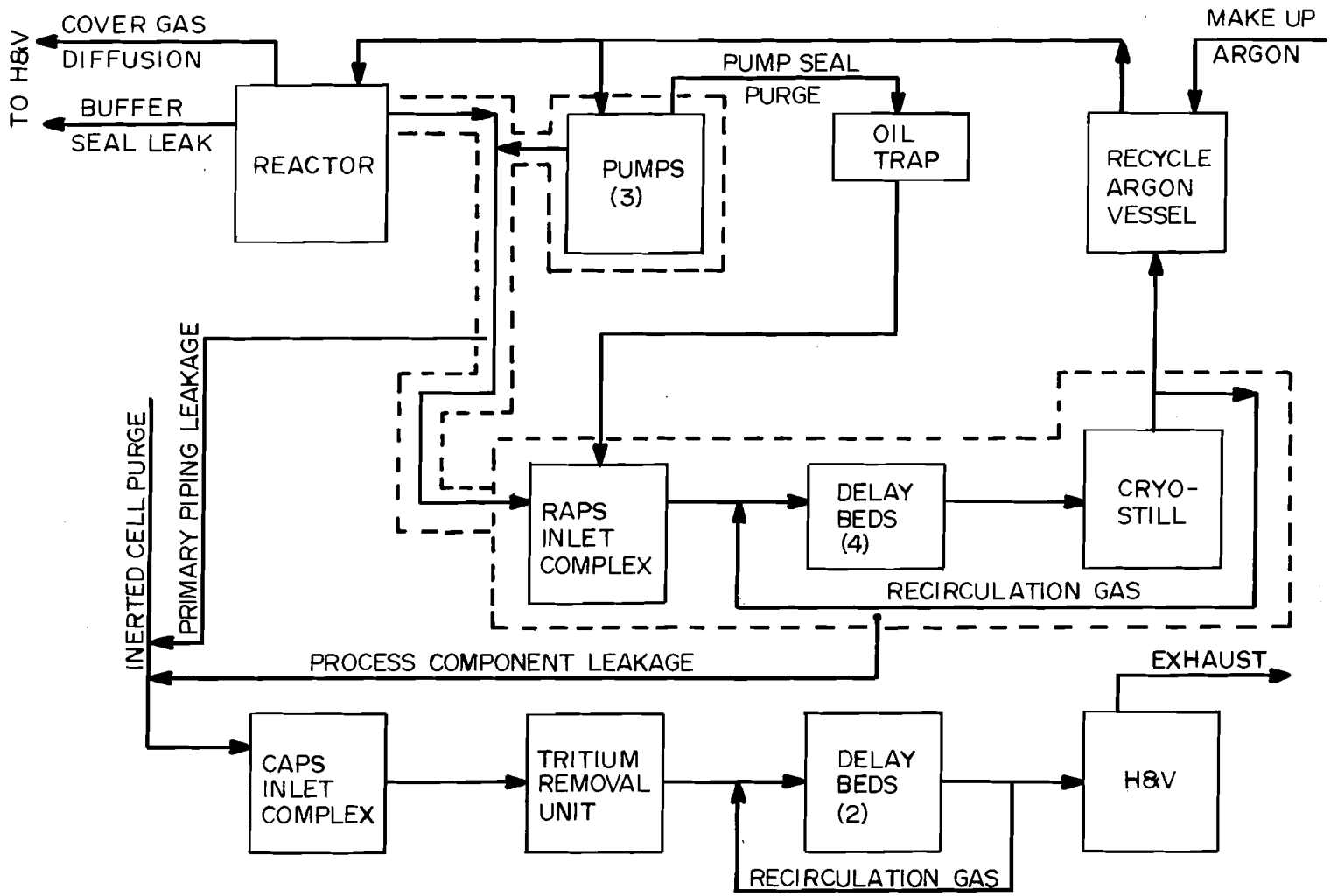

Figure 10.8-1 SELECTED CONFIGURATION FOR GAS RADWASTE SYSTEM (SYSTEM 4)

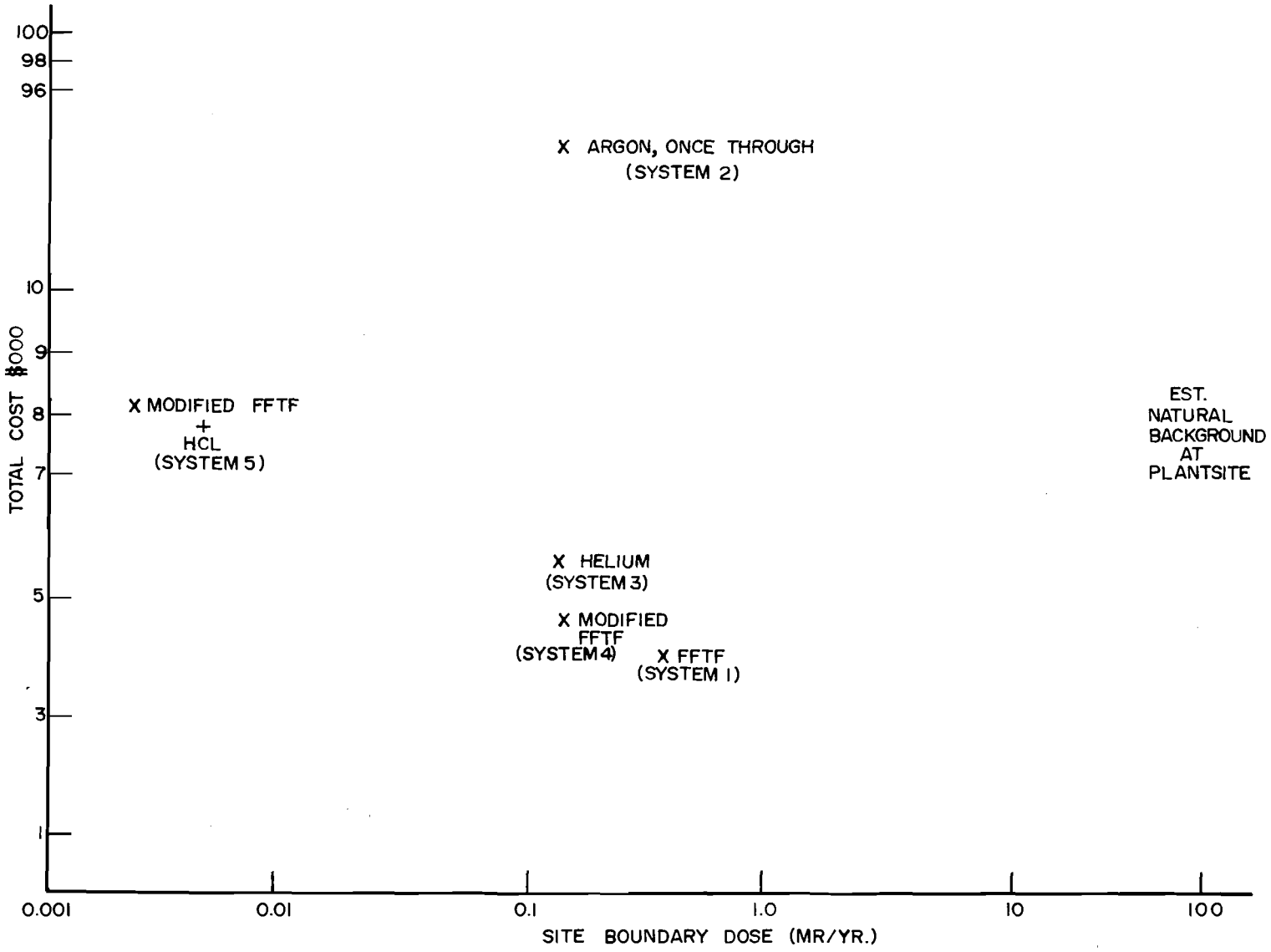

Figure 10.8-2 COMPARISON OF COSTS AND ESTIMATED SITE BOUNDARY DOSES

10.9 TRANSMISSION FACILITIES

Transmission facilities are required to transmit generated electricty into the TVA 161-kV transmission network and to provide reliable, redundant electrical interconnections that will guarantee off-site power to the CRBRP. The CRBRP will be connected to the AEC-owned Ft. Loudoun K31 161-kV transmission line were it passes the plant switchyard, requiring no new transmission corridor. A second transmission connection to an independent transmission circuit will be required. A second circuit available nearby, TVA-owned Ft. Loudoun K-31 161-kV transmission line, will require approximately three miles of transmission corridor. The proposed route is described in Section 3.9. An alternative segment was evaluated for a portion of this corridor.

10.9.1 DESCRIPTION OF ALTERNATIVE SEGMENT

The alternative segment, D-B on Figure 10.9-1, follows an abandoned 50-foot wide right-of-way from TVA's 161-kV line, beginning approximately 600 feet west of the intersection of White Wing Road and Bethel Valley Road to the intersection of the abandoned corridor with the 500-kV transmission line at Point B. A corridor, previously occupied by AEC's Wheat Project-Clinton Laboratories 13.2-kV transmission line, has been abandoned for a number of years and contains nearly a continuous growth of 10-foot tall saplings, although shrubs and herbs are common on the corridor. Segment D-B would require clearing an additional 125-foot wide corridor adjacent and parallel to the vacant AEC right-of-way. A 75-foot separation would be maintained between the proposed loop connection.

The general soils and land use discussions for the proposed route, described in Sections 3.9.2 and 3.9.3, apply to the alternate segment; however, the specific soils and biotic communities will be different as discussed below.

Nine woody plant community types occur in the alternate corridor Segment D-B. The total amount of each community to be cleared, expressed in acres and percent of the whole is shown in Table 10.9-1. Natural pine and unforested areas occupy approximately 68 percent of the 33.9-acre corridor; the old-field habitat on the abandoned corridor is considered unforested. Predominant community types in the natural pine areas are shortleaf pine-Virginia pine, Virginia pine, loblolly pine-shortleaf pine and loblolly pine. Additional information describing the abandoned transmission corridor communities may be found in Section 2.7. This information is equally applicable to the proposed route and the alternate route except that white-tailed deer are more common on the abandoned corridor than elsewhere on the Site area.

Existing access roads would be adequate for the construction on the alternate route. Historical and archaeological sites were discussed in Section 2.3. Hardware and tower structures are the same as described in Section 3.9. Final selection of the type structure to be used will be delayed as long as practicable to prevent the exclusion of other structures, which may be found more suitable for this project at a later date.

10.9.2 ENVIRONMENTAL IMPACTS

Some unavoidable impact will result from transmission line construction. Clearing methods, installation procedures, erosion control measures, restoration activities and solid waste disposal and their associated impacts are described in Section 4.2. This information applies to the alternate segment except as discussed below.

Alternate segment D-B would cross soils with impact potentials, as described in Table 10.9-2.

Approximately 86 percent of the 1.6-mile alternate route segment would cross soils ranging in erosion potential from slight to moderate; heavy

equipment impact potential would range from slight to moderate on approximately 79 percent of the corridor distance; and mortality of planted seedlings would range from slight to moderate on 73 percent of the corridor, as shown in Table 10.9-2.[2] Estimated productivity would range from low to moderate on 100 percent of the corridor, as shown in Table 10.9-2.

Point D, where the existing K31 161-kV transmission line would be cut and spliced to the alternate loop segment, would be located approximately 600 feet from the intersection of Bethel Valley and White Wing Road; the corridor would be visible for approximately one mile from the intersection down Bethel Valley Road.

10.9.3 COMPARISON OF PROPOSED AND ALTERNATE ROUTE SEGMENTS

Proposed transmission route A-B will be 0.2 mile shorter than alternate route D-B. Proposed segment A-B would have one high point crossing, while the alternate route would have one "long view" where a clear view down the transmission corridor is possible.

In terms of total effect, the proposed route would have a slightly greater effect on terrestrial organisms than the alternate route, as shown in Table 10.9-3. Of the total acreage to be cleared, the alternate segment would require clearing approximately 4.5 more acres than the proposed route. It would also affect 11.4 more acres of unforested land, which is preferred browse habitat for deer, producing a significant reduction in deer browse habitat. The alternate corridor also would affect approximately six more acres of natural pine and ten fewer acres of hardwood than the proposed route. Natural pine provides habitat for fewer fauna species than hardwood communities.

The proposed route is preferred because it is shorter, lacks a major visual impact, affects fewer forested acres and presents less construction impact than the alternate route even though the proposed route would affect terrestrial organisms slightly more.

The proposed and alternate transmission routes cross soils with impact potentials as shown in Table 10.9-4. Comparing distances in miles where each route crosses soils with moderate to severe potential, the proposed and alternate routes have approximately equal soil erosion potentials. The alternate route has greater expected heavy equipment impact and seedling mortality potentials than the proposed route as shown in Table 10.9-4. The alternate route crosses 0.17 mile more soil of low natural productivity than the proposed route; a soil having a low natural productivity has a low natural fertility and major revegetative problems as shown in Table 10.9-5. Therefore, the proposed route will have less severe construction and revegetation impacts than the alternate route.

TABLE 10.9-1

WOODY PLANT COMMUNITIES ALONG THE ABANDONED TRANSMISSION LINE IN AREAS ADJACENT TO THE CLINCH RIVER SITE

Overstory Communities	Coverage (acres)	Coverage (%)
Unforested	13.7	40.5
Natural pine	9.2	27.1
Hardwood	4.2	12.4
Pine plantation	3.1	9.1
Hardwood - natural pine - cedar	1.1	3.2
Natural pine - cedar	1.0	2.9
Hardwood - cedar	0.8	2.4
Hardwood - natural pine	0.5	1.5
Cedar	0.3	0.9
Total	33.9	100.0

TABLE 10.9-2

SOIL EROSION, HEAVY EQUIPMENT AND SEEDLING MORTALITY IMPACT POTENTIALS EXPRESSED AS PERCENTAGES OF THE CRBRP ALTERNATE SEGMENT CORRIDOR

Degree	Soil Erosion Potential (percent)	Heavy Equipment Impact Potential (percent)	Seedling Mortality Potential (percent)
Slight	35.3	7.9	2.2
Slight to Moderate	49.6	45.7	4.3
Moderate	1.4	25.0	66.9
Moderate to Severe	13.7	14.3	20.9
Severe	--	7.1	5.7
Total	100.0	100.0	100.0

TABLE 10.9-3

COMPARISON OF CRBRP PROPOSED AND ALTERNATE TRANSMISSION SEGMENTS A-B AND D-B BASED ON ACREAGE OF VEGETATIVE COMMUNITIES AFFECTED

Community Type	Acreage Affected	
	A-B Proposed	D-B Alternate
Hardwood	14.6	4.2
Unforested	2.3	13.7
Natural pine	3.3	9.2
Hardwood - natural pine - cedar	5.6	1.1
Pine plantation	1.0	3.1
Hardwood - natural pine	1.4	0.5
Natural pine - cedar	0.2	1.0
Hardwood - cedar	0.7	0.8
Pine plantation - cedar	0.3	0
Cedar	0	0.3
Total	29.4	33.9

TABLE 10.9-4

COMPARISON OF CRBRP PROPOSED AND ALTERNATE TRANSMISSION ROUTES ON BASIS OF MILEAGE THROUGH SOIL IMPACT POTENTIAL CATEGORIES

	Soil Erosion Potential		Heavy Equipment Impact Potential		Seedling Mortality Potential	
Degree	Proposed	Alternate	Proposed	Alternate	Proposed	Alternate
Slight	0.23	0.56	0.17	0.13	0.03	0.04
Slight to Moderate	0.94	0.80	0.94	0.73	0.07	0.07
Moderate	0	0.02	0	0.40	0.87	1.07
Moderate to Severe	0.23	0.22	0.24	0.23	0.39	0.33
Severe	0	0	0.05	0.11	0.04	0.09

TABLE 10.9-5

COMPARISON OF CRBRP PROPOSED AND ALTERNATE TRANSMISSION ROUTES ON BASIS OF MILEAGE THROUGH SOIL IMPACT POTENTIAL CATEGORIES

	Natural Productivity	
Degree	Proposed	Alternate
Moderate to High	0	0
Moderate	0.09	0.22
Low to Moderate	0.68	0.58
Low	0.63	0.80

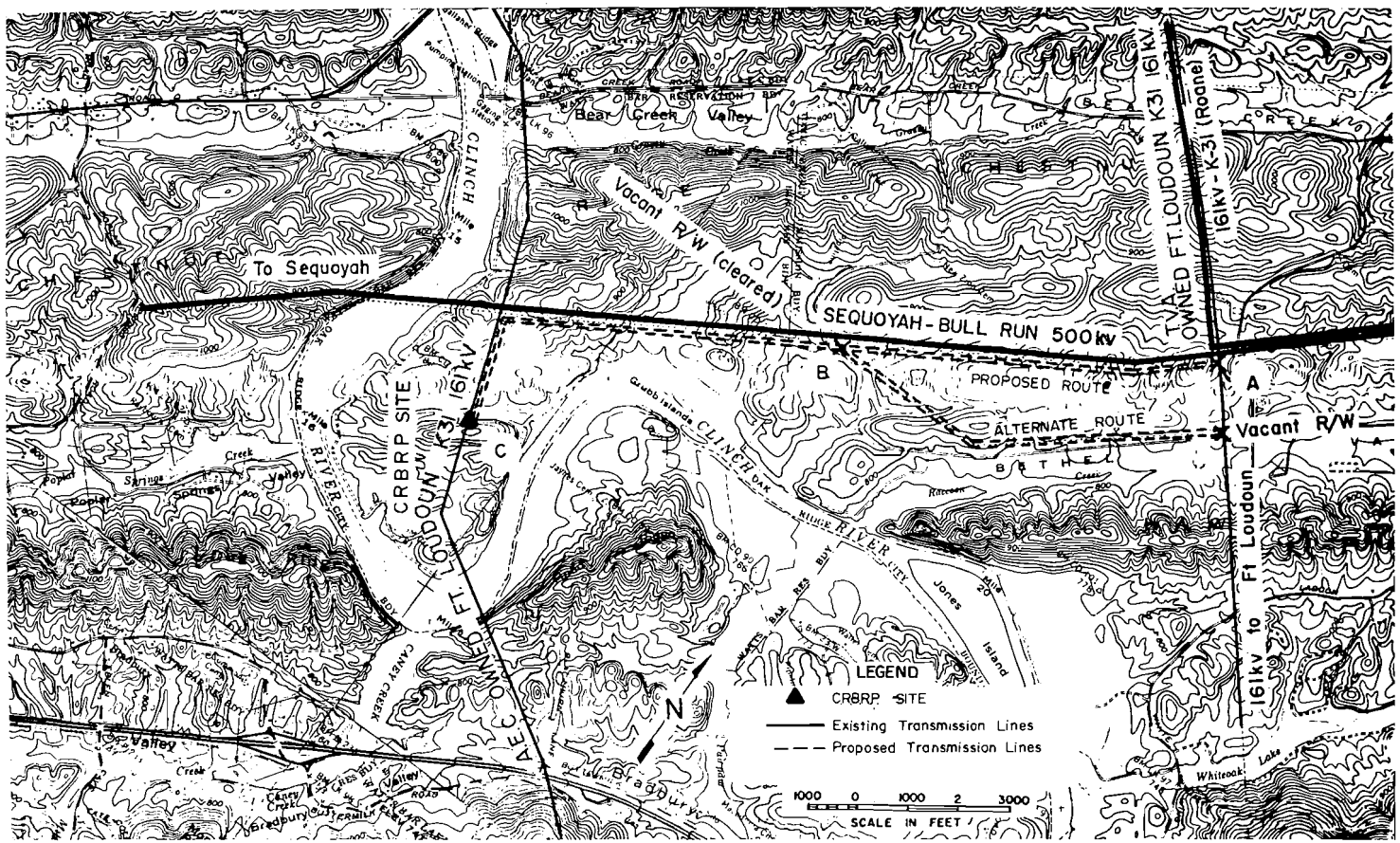

Figure 10.9-1 PROPOSED AND ALTERNATE TRANSMISSION LINE ROUTES OF THE CRBRP SITE AREA

10.10 OTHER SYSTEMS

Several other major systems, as discussed below, were investigated and found to create no significant adverse environmental impact. Therefore, alternatives for these systems were not considered. These systems include the emergency diesel generators and diesel fire pump, steam generator and emergency cooling towers.

10.10.1 EMERGENCY DIESEL GENERATORS AND DIESEL FIRE PUMP

The CRBRP will maintain two diesel generators and a diesel fire pump for emergency use during outside power loss. These are required for safety reasons and, except for routine testing, are not utilized during normal operation. Environmental effects of diesel operation are discussed in Section 5.5.

10.10.2 AUXILIARY STEAM GENERATOR

An electric auxiliary steam generator will be used to supply steam for plant operations when it is not available by extraction from the turbine-generator. This generator will be used for initial plant startup and infrequent occasions when the unit is down. No gases will be emitted and, consequently, no adverse environmental impact will be associated with the generator operation.

10.10.3 EMERGENCY COOLING TOWERS

The emergency cooling system supplies cooling water to all safety-related equipment after a casualty event. It consists of a supply basin and small cooling towers. The entire system operates on a closed cycle with no routine releases to the environment; therefore, no adverse environmental impacts are expected.

11.0 SUMMARY OF BENEFIT-COST ANALYSIS

11.1 GENERAL CONSIDERATIONS

It must be recognized that any act of man or nature has some effect upon the environment. It is also important to note that although adverse impact can be reduced by the allocation of additional resources for environmental protection, the law of diminishing returns applies to the resources expended. This point was recognized by the U. S. Congress in enacting the National Environmental Policy Act (NEPA) of 1969 and was further reinforced by the U. S. Court of Appeals for the District of Columbia in 1971 in the Calvert Cliffs decision. A benefit-cost analysis of the proposed project (the cost-effectiveness portion in particular) formalizes the accounting of environmental, social, economic and technical values of the proposed project and, therefore, assists in the implementation of both the letter and spirit of NEPA.

The proposed action is the construction and operation of a demonstration plant that will provide a vital step toward the achievement of the timely availability of the LMFBR as a power generation technology option for commercial use. Therefore, the objectives and benefits of the proposed project are broader in scope than is the case for nuclear power plants built for the specific purpose of generating electrical power. The methodology of benefit-cost analysis typically used[1] must then be somewhat altered to provide a meaningful evaluation of this particular case. The several areas where the benefit-cost analysis reflects significantly different perspectives are:

1. The identification and evaluation of benefits;
2. The balancing of benefits, which are largely qualitative in nature or cannot be reasonably presented on a common basis, with costs;

3. The balancing of benefits and costs on more than one level of evaluation,

   a. The primary benefits and economic costs are national in scope;

   b. The secondary benefits and environmental costs are mostly local in nature; and

4. The relationship between benefits and costs of this specific project and the broader scope breeder reactor economy.[2]

In the process of developing a project plan and designing the proposed plant, guidelines have been used by the participants with the intent of reducing the environmental costs as much as possible. In addition, the recommendations of environmental consultants[3] have been sought and incorporated for this purpose. Alternatives were evaluated (see Section 10) to improve systems and radwaste technologies. The result is a proposed plant with low environmental and social impacts; the differences between alternatives are sometimes minor and insignificant. In this regard, it must be borne in mind that cost-benefit analysis is one of many decision-making tools of importance to evaluation of the project. It provides no dispositive answers in itself and its results must be viewed with recognition of the uncertainties and qualitative values which are implicit in the analysis. Nevertheless, the evaluation has been conducted with thoroughness and concern for environmental values and directed toward defining the net benefits of the project. The detailed evaluation of need, benefits, costs, socioeconomic concerns and alternatives has been presented in other sections. This section will then summarize the evaluations from other sections and present the complete benefit-cost analysis in an integrated framework.

The methodology of benefit-cost analysis used here consists of the following steps:

1. Analysis of alternatives to the proposed CRBRP to affirm that the most cost-effective selections to satisfy project objectives have been made to minimize environmental and social costs on an economic cost basis. (Sections 1, 9 and 10);

2. Clear description of the need for the CRBRP in terms of the benefit of that project to society (Section 1);

3. Summarization of the cost-effective selections made from available alternatives in categories of:

   - alternatives to project (Section 11.3.1)

   - plant siting (Section 11.3.2)

   - plant design alternatives (Section 11.3.3)

4. Summarization of the environmental, economic and social costs of the proposed plant (Section 11.4 as evolved from Sections 4, 5 and 8);

5. Summarization of the benefits (Section 11.2 as evolved from Sections 1 and 8); and

6. Balancing the costs of the most cost-effective project, plant and selections, against the benefits to determine that a net benefit to society exists (Section 11.5) at both the national and local levels.

11.2 IMPORTANT BENEFITS OF THE PROPOSED FACILITY

The objectives of the proposed project have been discussed in Section 1 of this report. These objectives are focused on the development and demonstration of the LMFBR in a commercial setting. The primary benefits of the Clinch River Breeder Reactor Plant (CRBRP) will be those benefits attained by achieving those objectives. On this basis, the primary benefits consist of the contributions made by this demonstration project as a vital step in the development of the LMFBR as an option for the commercial generation of electricity.

In striving to attain these primary benefits, the project will also produce other benefits which are designated as secondary benefits. Secondary benefits are a corollary to achievement of the stated objectives and could be produced by other actions. This does not suggest however that the secondary benefits are not significant in the overall evaluation and balancing of benefits and costs of the proposed project. These secondary benefits are of real concern to the communities in the immediate vicinity of the Site and are thus included in the total benefit-cost analysis.

11.2.1 PRIMARY BENEFITS

The CRBRP is a crucial and valuable development and demonstration step toward the development of a commercial breeder reactor industry. Therefore, the primary benefits consist of (1) those technological, commercial and informational needs directly provided by the project; and (2) the benefits of the breeder reactor economy which can be attained by development through this project and are thus attributable on a longer term basis.

The direct primary benefit of the CRBRP will be the established viability of the LMFBR as a reliable, safe and environmentally acceptable source

of electrical energy and to provide a major contribution to the technical knowledge and industrial base that is necessary to establish a commercial LMFBR industry as an option for power generation. The CRBRP will produce the following benefits toward achieving the major objectives:

1. Demonstration that the necessary technology is indeed available to successfully scale up, construct and operate commercial-sized LMFBR's;
2. Technical basis for extending the technology to future commercial plants where improvements in fuel life, plant capacity and thermal efficiency will be made;
3. Operating data on the environmental impact of the LMFBR before large numbers of commercialized LMFBR's are constructed;
4. Demonstration of the nuclear parameters necessary for commercial development;
5. Demonstration of the minimal impact from disposal of radioactive waste materials;
6. Demonstration of the equipment on a large scale; and
7. Demonstration of the breeder concept in an industrial environment.

The LMFBR offers substantial benefits through its efficiency in the use of energy resources. This translates into savings of uranium ore and associated minining requirements, reduction in separative work requirements for enrichment and fuel costs for nuclear power generation. Thus, the availability of fissile fuels can be extended considerably and substantial economic benefits attained. These benefits are summarized in Sections 1 and 9 and presented in detail in the draft statement for the LMFBR program.(1) Since the CRBRP is a necessary step if these benefits are to be attained, these benefits will accrue beyond the terms of the proposed project.

11.2.2 SECONDARY BENEFITS

As a direct result of the commitment to construct and operate the CRBRP, a number of secondary benefits will be generated. These benefits will accrue to the local area for the most part and consist of the jobs created and the resultant income generation. A complete description of these benefits and the bases for estimation have been presented in Section 8.2.2 and are summarized in Table 11.2-1.

During the peak construction period, as many as 2,050 jobs will be created and will lead to the resultant direct and induced income of $30 million in the year of maximum activity. Approximately 120 employees will be required for the long-term operation of the plant. This will generate about $2.2 million in direct and induced income locally. The total income benefits (1974 dollars) generated over the construction period will be $107 million. In addition, the income benefits (1974 dollars) of $1.6 million per year will be generated.

In addition to the employment and income benefits to the local region, a number of other secondary benefits will be generated. Those employees moving into the area from other areas will stimulate the construction of housing and the continued economic growth of the area. While the contribution of this project to the local economy will be small compared to the total existing economic activity, it will be a positive contribution as shown in Table 11.2-1. The increased population and economic activity will carry an appropriate portion of the tax revenue requirements on an equal basis with the existing residents and economy.

The power generating capacity of the plant will not supplant other generating capacity in the TVA system. However, the electrical output generated by the plant will be purchased by TVA as part of the project agreements. It is anticipated that about 1-1/4 billion kilowatt-hours of electricity valued at $9.4 million (1974 dollars) will be made available

annually to the TVA system as a result of operation of the CRBRP during the demonstration period. When the plant is operating it will then effect a small reduction in the required generation to meet demand and associated environmental effects within the TVA system.

In addition to the secondary benefits attained locally, it can be noted in Table 8.3-1 that fuel fabrication, materials, engineering and equipment of the reactor manufacturer and the architect-engineer, and development constitute significant expenditures. This in turn will maintain and generate jobs and income at a number of locations throughout the country. While none of this benefit is sufficiently concentrated or large in magnitude to impact on local economies, these do constitute significant benefits to the individuals and corporation directly involved.

In addition to the secondary benefits resulting directly from expenditures for the project, there are many other secondary benefits which are attributable to the CRBRP over the long term. Some of these are the secondary benefits of the timely development of the LMFBR as a commercially available power generation option. To the extent that the CRBRP is a vital step in that development, these secondary benefits accrue beyond the term of the project. Some of these secondary benefits are:

1. Reduction in environmental effects of mining;
2. Reduced dependence on enrichment facilities with the associated energy, environmental and capital costs;
3. Reduced strain on rapidly decreasing known supplies of petroleum and natural gas;
4. Reduced dependence of the United States on resources of other nations;
5. Improvement in the nation's balance of payments; and
6. The continued growth of the standard of living rather than forcing reductions due to a lack of energy resources.

TABLE 11.2-1

SECONDARY BENEFITS SUMMARY

Employment Benefits (number)	
Peak construction employment	2,050
Operating and technical permanent	120
Induced permanent employment	90
Income Benefits (millions of dollars)	
Payroll income (1974 dollars)	
Through demonstration period	115
Induced employment income (1974 dollars)	
Through demonstration period	8
Annual payroll income (1974 dollars)	
Maximum construction	30
Direct and induced permanent	2.3
Electrical generation benefits	
Value of electricity purchased (million of 1974 dollars)	47

11.3 PROJECT COST-EFFECTIVENESS

The development of sound benefit-cost analysis for a proposed project is dependent on a cost-effectiveness evaluation of alternatives that are available. The purpose is to demonstrate that the proposed action constitutes the most reasonable and responsible course of action of all available choices to meet the stated objectives. By evaluating alternatives on the basis of a specified project, the primary benefits associated with the alternatives are assumed to be equal. Thus, the benefit-cost analysis can, in essence, be reduced to a cost-effectiveness evaluation.

Several categories of alternatives have been considered in this benefit-cost analysis in order to assure a maximum benefit-to-cost balance. These categories are:

1. Strategic alternatives to the project;
2. Site alternatives; and
3. Plant design alternatives.

The consideration of alternatives in the cost-effectiveness evaluation of this project is presented in a hierarchical order as a means of narrowing the scope of alternatives. Thus, the basic strategic alternatives are presented first, followed by consideration of alternative sites for the plant. Alternative plant design options to improve the environmental and economic cost-effectiveness for the specific plant and location are then evaluated.

Summaries of the cost-effectiveness evaluation presented in other sections of this report are presented in the following subsections.

11.3.1 STRATEGIC ALTERNATIVES TO PROJECT

Strategic alternatives to the Clinch River Breeder Reactor Plant (CRBRP) are limited by the nature of the objectives of this project. Since the stated objective is the development and demonstration of the LMFBR and since alternative energy sources to the LMFBR have been evaluated, other energy sources are not a part of this consideration of alternatives. Building upon the base of the historical LMFBR program, with the Fast Flux Test Facility (FFTF) being the most advanced stage, the following strategic alternatives could be conceived:

1. All new LMFBR plant;
2. New LMFBR as steam supply hooked on to an existing balance of plant;
3. Modify existing reactors;
4. Change scope and modify FFTF; and
5. Eliminate demonstration size plant and proceed directly to commercial reactors.

Analysis of these alternatives reveals that only the first two warrant evaluation in detail. Plant sizing requirements are discussed in Section 1.3.6 where plants either smaller or larger than the 300-500 MWe range are shown to be impractical selections by not providing a reasonable advancement in the LMFBR technology without substantial risks and costs. Likewise, going directly from the FFTF to a commercial LMFBR would have increased costs and a lower probability of success. Existing reactors would not be compatible for modification because of basic design differences, major size differences and the lack of technical feasibility. Modification of the FFTF would require serious compromising of the objectives for which the FFTF was intended, design and economic costs comparable to the construction of new facilities and the loss of valuable testing and experimental data for the assurance of viable and safe design.

The two strategic alternatives considered worthy of detailed analysis (all new plant and the hook-on plant have been thoroughly evaluated as specific options in Section 9.2.

11.3.2 SITE ALTERNATIVES

The objective in evaluating site alternatives is to establish the preferred alternative for location of the plant. The criteria for site evaluation encompass relevant environmental, economic, social and technical considerations. These criteria provide a framework for selection of that site location which, on balance of relevant environmental, economic, social and technical factors, will enable achievement of the project objectives most effectively.

Site alternatives are evaluated in conjunction with plant alternatives (all new plant versus a hook-on plant) in Section 9.2. That evaluation reflects a systematic, step-wise consideration of

1. The screening of hook-on sites;
2. The evaluation of engineering and economic feasibility of hook-on arrangements at candidate hook-on sites;
3. The screening of new plant sites; and
4. The comparative evaluation of both hook-on and new candidate sites with respect to identifiable environmental, economic, social and technical factors.

Briefly summarized, the evaluation of site alternatives demonstrates that:

1. Upon analysis of factors such as plant size, steam conditions, seismic characteristics, population distribution and plant utilization patterns, TVA's existing Widows Creek and John Sevier steam plants were selected as acceptable candidate hook-on sites.

2. While acceptance of less than optimum steam conditions would be required, detailed evaluation indicated that hook-on arrangements at the candidate sites could be designed to accommodate an LMFBR NSSS. Hook-on arrangements at the candidate sites were considered to satisfy engineering and economic feasibility.

3. Upon analysis of factors such as the availability of cooling water, seismic conditions, access facilities, population distribution, site availability and future site usage for eleven new sites in the TVA service area, each of the sites was considered from a site suitability and environmental standpoint to be equivalent. However, only the Clinch River site met the site selection criteria of availability and future usage. Moreover, comparison of site physical, engineering and environmental characteristics indicated that there were no known reasons for precluding consideration of the Clinch River site. Therefore, the Clinch River site was selected for more detailed analysis as a candidate new site.

4. Upon detailed evaluation of the social, environmental and economic characteristics of the candidate hook-on and new sites, no strong overall advantage for any site was apparent. The candidate sites were considered to be environmentally equivalent and there were no known reasons why each would not be environmentally acceptable. In addition, each of the plant-site arrangements were considered to be economically equivalent within the limits of uncertainty in the analysis. However, further evaluation of plant characteristics for hook-on versus all new plant arrangement offered overriding technical advantages in terms of capability to meet project objectives. Therefore, on balance of all relevant environmental, economic, social

and technical considerations, the Clinch River site, with its all-new plant arrangement, was selected as the preferred alternative.

11.3.3 PLANT DESIGN ALTERNATIVES

Alternative plant design features were evaluated to demonstrate that the selected plant systems are the most cost-effective options available for minimizing the potential environmental impact. These evaluations are presented in detail in Section 10.

As demonstrated throughout this report, the proposed CRBRP is comprised of plant systems which will result in an insignificant impact on the environment. The magnitudes of potential further reductions are in all cases very small and in some cases do not exist with present technology. Where minor reductions in environmental costs of a particular type might be available, other environmental costs or economic costs outweigh the slight advantage. Therefore, the plant design alternatives selected have been demonstrated in Section 10 to be the most cost-effective available.

11.3.4 COST-EFFECTIVENESS OF PROPOSED PLANT

By considering all of the available alternatives for reduction of the environmental impacts of the proposed CRBRP, it has been demonstrated that the proposed plant is the cost-effective course of action to achieve the desired objectives.

11.4 SUMMARY COSTS OF PROPOSED PLANT

11.4.1 ENVIRONMENTAL COSTS

The environmental costs of the proposed plant have been discussed and evaluated in Sections 4, 5 and 10 and are summarized in Table 11.4-1. In addition to the environmental costs directly resulting from the construction and operation of the plant, there are remote and indirect environmental costs resulting from fuel cycle considerations. These costs, presented in Tables 5.7-1 and 5.7-2, estimate those remote impacts and show that the small incremental impacts attributable to the fuel cycle do not significantly increase the environmental costs of the project and in no way affect the conclusion of the cost-benefit analysis. In evaluating alternatives, selecting plant systems and arriving at specific designs, concern for the reduction of environmental impact potential has been exhibited. The result has been a proposed plant for which there will be negligible environmental impact.

11.4.2 ECONOMIC COSTS

The most important economic costs of this proposed CRBRP are the direct costs of construction and operation of the demonstration plant. These costs are presented in Section 8.3.1 and Table 8.3-1. The total plant investment is estimated at $868.6* million. Development costs and operating costs over the five-year demonstration period will bring the total project cost in 1974 dollars to $1.4785 billion.*

---

* This figure includes escalation and contingency.

11.4.3 SOCIAL COSTS

The construction and operation of the CRBRP will lead to a number of social costs. These are local in nature for the most part. The social costs are summarized in Table 11.4-2. Most important of these social costs are those resulting from the construction phase when a large number of temporary employees will have impacts on the local communities and the social services such as schools, housing and highways. Since all of these costs, as summarized in the table, are relatively small in comparison to the ability of the communities to absorb them, no significant detrimental impact is expected.

TABLE 11.4-1

ENVIRONMENTAL COST SUMMARY

Environmental Cost Item	Cost Measure	Cost Magnitude	Report Location
AQUATIC IMPACT - PHYSICAL			
Water Use			
Maximum seasonal withdrawal	gal/min	8,075	Table 3.3-4
Maximum seasonal consumption	gal/min	4,934	Table 3.3-4
Proportion of Melton Hill Dam releases	percent	0.20	Table 10.1-10
Thermal Plume			
Winter high flow	Maximum temperature rise (Δ°F)	1.0	Table 5.1-1
	Spatial extent (acre-feet)	0.26	
Summer low flow	Maximum temperature rise (Δ°F)	0.5	
	Spatial extent (acre-feet)	0.25	
Extreme Case - February	Maximum temperature rise (Δ°F)	1.5	
	Spatial extent (acre-feet)	0.14	
Extreme Case - July	Maximum temperature rise (Δ°F)	0.5	
	Spatial extent (acre-feet)	0.79	

(Continued)

TABLE 11.4-1 (Continued)

Environmental Cost Item	Cost Measure	Cost Magnitude	Report Location
Chemical Plumes			
Chemical Waste Treatment System Discharges (including cooling system blowdown)	Maximum increase in river TDS (%)	8.2	Table 10.4-4
Biocide System Discharges	Maximum increase in complexed Cl_2 (%)	0.0051	Table 10.5-1
Sanitary Waste System Discharges	Maximum increase in river BOD (%)	0.05	Table 10.6-4
AQUATIC IMPACT - BIOLOGICAL			
Entrainment	%/yr of organisms	0.33	Table 10.1-10
Impingement	Water velocity 0.75 inch from screen surface	0.2 fps	
	% of river cross-sectional area occupied by intake structure	0.4	p. 10.2-17
Thermal Plume Biological Effects	No impact		Section 5.1.3

(Continued)

TABLE 11.4-1 (Continued)

Environmental Cost Item	Cost Measure	Cost Magnitude	Report Location
AIR IMPACT			
Drift Deposition	lbs/acre-month of chlorides	2	p. 5.1-20
	lbs/acre-month of TDS	89	Table 5.1-9
Ground Fog	Potential hrs/yr of <1/2 mile visibility	146	Table 5.1-7
	Percent of natural fog	2.3	Table 10.1-10
Visible Plume	Extent in miles for C stability, 95% RH	1.8	Table 10.1-10
RADIOLOGICAL IMPACT			
Dose to Aquatic Species			
External total	Maximum, mrem/yr	1.7×10^{-7}	Table 5.2-5
Internal total	Maximum, mrem/yr	1.61	Table 5.2-5
Dose to Terrestrial Species			
External total	Maximum, mrem/yr	0.01	Table 5.2-5
Internal total	Maximum, mrem/yr	1.06	Table 5.2-5

(Continued)

TABLE 11.4-1 (Continued)

Environmental Cost Item	Cost Measure	Cost Magnitude	Report Location
RADIOLOGICAL IMPACT (Continued)			
Individual Dose to Man			
External total body	mrem/yr	0.64	Table 5.3-7
Internal whole body	mrem/yr	0.14	Table 5.3-7
Population Dose to Man			
External total body	man rem/yr	0.67	Table 5.3-7
Internal whole body	man rem/yr	3.9×10^{-7}	Table 5.3-7
Exposure Compared to Natural Radiation			
Individual external total body	%	0.64	Table 5.3-7
Individual internal whole body	%	0.78	Table 5.3-7
Population external total body	%	6.7×10^{-10}	Table 5.3-7
Population internal whole body	%	2.2×10^{-15}	Table 5.3-7
TERRESTRIAL IMPACT			
Land Disturbance for Plant			
Forestland	acres	115	Section 4.1.1.6

(Continued)

TABLE 11.4-1 (Continued)

Environmental Cost Item	Cost Measure	Cost Magnitude	Report Location
TERRESTRIAL IMPACT (Continued)			
Land Disturbance for Transmission Line			
Forested	acres	54	Section 4.2.7
Unforested	acres	5	Section 4.2.7
Site Biota Effects	--	minor	Section 4.1.1.6
Rare and Endangered Plant Species		No impact	Section 4.1.1.6
Rare and Endangered Wildlife		No impact	Section 4.1.1.6
Human Habitation		No impact	Section 4.1.1.7
Construction Noise Levels Range	dBA at 500 feet	69-105	Table 4.1-4

TABLE 11.4-2

SOCIAL COST SUMMARY

Construction Phase Influx	Average (1975-1981)	Peak (1979)
Construction workers	200	410
Mobile home dwellers	100	205
School age children	130	267

County Impact	Roane	Knox	Anderson	Loudon
Schools	Minimal	Possibly Severe	Negligible	Negligible
Housing	Severe	Negligible	Severe	Negligible
Traffic	Possibly Severe*	Negligible	Possibly Severe*	Negligible
Government Services	Negligible	Negligible	Negligible	Negligible
Trade	Negligible	Negligible	Negligible	Negligible

Operating Phase Influx	Number
Permanent workers	96
School age children	77

Impact	All Counties
Schools	Negligible
Housing	Negligible
Traffic	Negligible
Government Services	Negligible
Trade	Negligible

*Dependent upon shift change schedule for CRBRP and AEC operations

11.5 BALANCE OF BENEFITS AND COSTS

As a result of the cost-effectiveness evaluation of alternatives to the project, site alternatives and plant design alternatives, a proposed project has been presented which meets regulations and protects indigenous values at minimum environmental, economic and social costs. The resulting costs, as summarized in Section 11.4 must then be balanced against the benefits summarized in Section 11.2 to demonstrate that a net benefit to society exists. Because of the unique character of the proposed Clinch River Breeder Reactor Plant (CRBRP), this balancing of benefits and costs can be evaluated at both the national and local levels.

11.5.1 NATIONAL-LEVEL BENEFIT-COST BALANCE

The CRBRP is proposed as a vital step toward the development of the LMFBR as a viable and commercially acceptable power generation option for operation in the late 1980's and beyond. As such, the LMFBR will offer substantial net benefits to the nation by extending the usefulness of available energy resources and reducing the environmental and economic costs of electrical power generation. These net benefits have been thoroughly evaluated on both quantitative and qualitative bases by the USAEC.[1] Since the CRBRP is an important development and demonstration step toward achievement of those benefits, the benefits will accrue beyond the term of the CRBRP project. They do constitute a strong incentive for proceeding along the path toward a breeder economy.

The direct primary benefit of the CRBRP will be the demonstration of the LMFBR as a reliable, safe and environmentally acceptable source of electrical energy and to provide a vital step toward a commercial LMFBR industry as a power generation option. These benefits have been discussed in detail in Section 1 and summarized in Section 11.2.1. In order to accomplish this objective, certain national level costs will be incurred. Foremost among these costs will be the economic costs for plant investments, development and operation through the five-year demonstration

period. These economic costs are presently estimated to be $1.4785 billion. In comparison, "the net cost saving over the period 1974-2020 is of the order of $50 billion on a discounted basis"[1] for the assumed breeder economy. Therefore, the economic value of providing this vital step in breeder development will more than pay for itself economically should the breeder economy be achieved. In any case, these economic costs represent an investment of substantially less than 1/10 of a percent of our federal budget (as a means of comparison), which is a small cost to pay for developing the option of the breeder for power generation. While the economic costs even at this low proportional level represent a substantial financial commitment, the significant extension of energy resources and reduction in environmental costs are well justified. The total of $1.4785 billion expended in the project will in turn maintain and generate jobs and income at numerous locations throughout the country. Similarly, minor secondary level environmental costs will be incurred in conjunction with the materials and fabrication components of these expenditures.

From a slightly different perspective, albeit less amenable to quantification, development of the breeder as an option for the generation of electrical energy can be justified on the basis of the benefits it provides as insurance or a means of risk aversion. Development of the breeder protects the nation's future interest in stable domestic energy supplies at reasonable cost. Should the breeder option be developed and future events prove that it is not needed, then the cost to the nation is that sunk cost of its development. Should, however, the breeder not be developed and should other presently nascent energy sources not be developed and available in time to meet energy demands, the societal cost to the nation would be immeasurably large. When the relatively minor risks of developing the breeder are balanced against the enormous risks which attend a failure to develop the breeder, the choice is clear. Timely completion of CRBRP will lead to timely availability of the breeder and

its benefits. On balance, the benefits to the nation of providing this vital step in developing the breeder option strongly outweigh the costs incurred on a national basis.

11.5.2 LOCAL LEVEL BENEFIT-COST BALANCE

The objectives of the CRBRP are directed toward serving national needs for a breeder power generation capability. Likewise, the major economic costs will be borne on a national level. However, the proposed CRBRP is to be specifically located at a site on the Clinch River in east central Tennessee. Those environmental and social costs directly resulting from the construction and operation of the CRBRP will be largely limited to the immediate region surrounding the site. These costs (1) are minimal in magnitude; (2) do not infringe upon indigenous environmental and social values; and (3) are favorably balanced with local benefits resulting from the project.

The environmental and social costs of the CRBRP have been summarized in Tables 11.4-1 and 11.4-2 and Sections 11.4.1 and 11.4.3. As shown there, the expected environmental and social costs are in most cases negligible and would not be expected to infringe on indigenous values. It is possible that some social costs might be incurred in the local school system and local traffic situation during the period of plant construction. In addition, localized additional environmental strain on an already tight housing situation might be expected. These social costs are not insurmountable, but might entail some local economic costs to overcome. With forewarning, it is possible that these social costs can be alleviated to some extent.

To balance with these environmental and social costs, there will be some local benefits as discussed in Section 11.2.2. Among the secondary benefits of the CRBRP are income and employment benefits expected to result from the construction and operation of the plant amounting to

about $115 million in 1974 dollars of local income generation. These benefits will stimulate economic growth and will provide a net benefit locally.

11.5.3 SUMMARY BENEFIT-COST BALANCE

The balance of benefits and costs has been evaluated for two constituencies of concern here - the national and the local. Favorable balances toward net benefits have been demonstrated in both cases. Because of the nature of this plant, a qualitative evaluation of benefits and costs has been necessary. On the national level, the significant benefits achievable in developing an optional power generator mode and the importance of the CRBRP to the program for attaining that goal strongly outweigh the primary national cost - the economic cost. In addition, the local balance of benefits against environmental and social costs weighs in favor of the project.

12.0 ENVIRONMENTAL APPROVALS AND CONSIDERATIONS

The CRBRP will be titled in the United States and built on Government-owned land. The plant is subject to the comprehensive and broad-scale environmental procedures and Federal and State consultation requirements of the National Environmental Policy Act of 1969, 42 USC 4331 et seq. (1970) (as implemented by E. O. 11514 (3 C.F.R. 526 [1972]), the guidelines of the Council on Environmental Quality (40 C.F.R. 1500 [1973]) and Office of Management and Budget Circulars A-78 and A-81, relating to the prevention, control and abatement of air and water pollution in Federal facilities, as well as certain provisions of the Clean Air Act, as amended, 42 USC 1857 and the Federal Water Pollution Control Act Amendments of 1972 (P.L. 92-500), which relate to the applicability of various Federal, State, interstate, or local air and water quality standards. Consistent with E.O. 11752 the plant will be designed, constructed, managed, operated and maintained in compliance with applicable substantive standards and limitations "to the same extent that any person is subject to such standards and limitations and in full compliance with State and local authorities" relating to pollution abatement. Consistent with this approach, the substantive requirements of Section 401 of the Federal Water Pollution Control Act will be met. Table 12.0-1 contains a listing of sources for applicable Federal and State requirements. Gaseous and liquid effluents will not affect the quality of the air and waters, respectively, of other states.

The Atomic Energy Commission, under authority of the Atomic Energy Act of 1954, as amended, has regulatory authority over the design, construction and operation of the facility. This Environmental Report constitutes a portion of the application for a construction permit for the CRBRP. It is prepared and submitted in compliance with 10 C.F.R. 50 for review and analysis by the AEC. Contingent upon completion of this review and the receipt of a construction permit, an application will be filed for an operating license in adherence to the appropriate schedule.

As with any project of this magnitude, numerous contacts have been made with local and state officials and agencies. In keeping with current policy and practice, close coordination and cooperation with these officials and agencies will be maintained to insure that the project is implemented in accordance with applicable regulations and recommended practices.

Agencies contacted prior to September 1,1974 along with the dates of such contacts are listed in Table 12.0-2. Each of these agencies were asked to comment on the draft copies of the CRBRP Environmental Report. Their comments were received and considered in the preparation of the final draft of the CRBRP Environmental Report.

TABLE 12.0-1
REQUIRED LICENSES AND PERMITS

	Agency	Purpose of Approval	Statutory and Legal Authority
CONSTRUCTION			
LAND			
Federal	Atomic Energy Commission	Permit for construction of CRBRP	Atomic Energy Act, 1954, 10 CFR 50
State	Bureau of Environmental Health Services, Division of Sanitation and Solid Waste Management	Registration and approval of a solid waste processing or disposal facility or site	Tennessee Code Annotated, Section 53-4301 et. seq.
	Department of Labor	Permit to construct an elevator	Tennessee Code Annotated, Section 53-2608
AIR			
State	Bureau of Environmental Health Services, Division of Air Pollution Control	Permit for open burning of trees, limbs and brush during clearing	Tennessee Code Annotated, Section 53-3408 et. seq.; Tennessee Air Quality Act; Tennessee Air Pollution Control Regulations, Chapter IV, Section 3
	Bureau of Environmental Health Services, Division of Air Pollution Control	Permit to construct air emission sources and/or air pollution control equipment	Tennessee Code Annotated, Section 53-3408 et. seq.; Tennessee Air Quality Act; Tennessee Air Pollution Control Regulations, Chapter IX, Section 1
WATER			
Federal	United States Army Corps of Engineers	Permit to construct intake and discharge facilities	River and Harbor Act of March 3, 1899, Section 10 (33 U.S.C. 403)
	United States Army Corps of Engineers	Permit to construct barge facilities	River and Harbor Act of March 3, 1899, Section 10 (33 U.S.C. 403)

(Continued)

TABLE 12.0-1 (Continued)

	Agency	Purpose of Approval	Statutory and Legal Authority
WATER (Continued)			
Federal (Continued)	United States Army Corps of Engineers	Permit to discharge dredge or fill material into navigable waters	Federal Water Pollution Control Act, as amended 1972, Section 404; Public Law 92-500 (33 U.S.C. 1151)
	United States Army Corps of Engineers	Permit for temporary work done in waterway such as drilling, dredging or temporary pipes	River and Harbor Act of March 3, 1899, Section 10 (33 U.S.C. 403)
	Tennessee Valley Authority	Construction of intake and discharge structures and barge facilities	Section 26a of the Tennessee Valley Authority Act of 1933, as amended (49 stat. 1079, 16 U.S.C. Sec. 831y-1)
	Tennessee Valley Authority	Temporary structures below maximum shoreline contours	Section 26a of the Tennessee Valley Authority Act of 1933, as amended (49 stat. 1079, 16 U.S.C. Sec. 831y-1)
CONSTRUCTION AND OPERATION			
LAND			
State	Department of Labor	Permit to operate any elevator, escalator or dumbwaiter	Tennessee Code Annotated, Section 53-2607
AIR			
Federal	Federal Aviation Agency	Permit for tall structures - necessary for any structures 200 feet or more aboveground or any structure representing sudden elevation change (cooling towers - meteorological tower)	Federal Aviation Regulation 77 14 CFR 77.1 et. seq.
	Federal Communications Commission	Permit for radio transmitters and associated towers	47 CFR 17.7 et. seq. 47 U.S.C. 309

(Continued)

TABLE 12.0-1 (Continued)

	Agency	Purpose of Approval	Statutory and Legal Authority
WATER			
Federal	United States Coast Guard	Permit for lights used on structures near the navigation channel such as the barge facilities	U.S. Coast Guard, Title 33 CFR, Chapter 1, Part 66.01-1 through 66.01-55, (43 U.S.C. 1333)
	Environmental Protection Agency	Permit to discharge under the National Pollutant Discharge Elimination System (N.P.D.E.S.)	Federal Water Pollution Control Act, as amended 1972; Public Law 92-500 (33 U.S.C. 1251 nt) 40 CFR 125
State	Bureau of Environmental Health Services, Division of Water Quality Control	Certification that the project will comply with applicable water quality standards	Federal Water Pollution Control Act as amended by Water Quality Improvement Act of 1970, Section 21b, 33 U.S.C. 1151 et. seq. at 1171(b). Tennessee Water Quality Control Act of 1971, Section 70-33Q (Tennessee Code Annotated, Section 70-324 et. seq.)
	Department of Conservation	Permit for withdrawal of 50,000 or more gallons of water per day - water use	Tennessee Code Annotated, Section 70-2005
	Bureau of Environmental Health Service, Division of Occupational and Radiological Health	Approval for plans for potable water	Tennessee Code Annotated, Sections 53-2002 and 53-2008
	Bureau of Environmental Health Services, Division of Water Quality Control and Division of Sanitary Engineering	Permit for construction and operation of a sewage system	Tennessee Code Annotated, Section 70-324 et. seq.; Water Quality Control Act of 1971, Section 70-330
	Bureau of Environmental Health Services, Division of Water Quality Control and Division of Sanitary Engineering	Permit for any waste not discharged into a sewage system - includes effluent discharges, construction of treatment works or new outlets for waste discharges	Tennessee Code Annotated, Section 70-324 et. seq.; Water Quality Control Act of 1971, Section 70-330

(Continued)

TABLE 12.0-1 (Continued)

	Agency	Purpose of Approval	Statutory and Legal Authority
OPERATION			
AIR			
State	Bureau of Environmental Health Services, Division of Air Pollution Control	Permit to operate air emission sources and/or air pollution control equipment	Tennessee Code Annotated, Section 53-3408 et. seq.; Tennessee Air Quality Act; Tennessee Air Pollution Control Regulations, Chapter IX, Section 2
WATER			
State	Bureau of Environmental Health Services, Division of Occupational and Radiological Health	Permit to discharge effluents into the river from radiation sources	Tennessee Code Annotated, Section 53-3306
RADIOACTIVE MATERIALS			
Federal	Atomic Energy Commission	License for source material not covered by the plant Operating License	Atomic Energy Act 1954, as amended, 10 CFR 40
	Atomic Energy Commission	License for special nuclear material not covered by the plant Operating License	Atomic Energy Act 1954, as amended, 10 CFR 70
	Atomic Energy Commission	License for by-product material	Atomic Energy Act 1954, as amended, 10 CFR 31
	Department of Transportation	Transportation of radio-active materials	Regulations on transportation of hazardous materials 49 CFR 173.389
	Department of Transportation	Permit for transportation of metallic sodium	Regulations on transportation of hazardous materials 49 CFR 173.206
State	Bureau of Environmental Health Service, Division of Occupational and Radiological Health	Permit for possession, use and storage of radiation sources. Also manufacture or disposal.	Tennessee Code Annotated, Section 53-3306

(Continued)

TABLE 12.0-1 (Continued)

	Agency	Purpose of Approval	Statutory and Legal Authority
OTHER PERMITS			
Federal	Atomic Energy Commission	Operating license to load fuel and to operate the CRBRP	Atomic Energy Act 1954, 10 CFR 50
	Atomic Energy Commission	Reactor Operator License	Atomic Energy Act 1954, as amended, 10 CFR 55
State	Department of Public Health	License to operate a medical laboratory	Tennessee Code Annotated, Section 53-4111

TABLE 12.0-2

AGENCY CONTACTS

Date	Agency	Discussion
March 13,1974	State of Tennessee, Office of Urban and Federal Affairs, Nashville, Tennessee	Discussion of the State of Tennessee's review of the CRBRP-ER. This agency is responsible for coordinating all comments from State departments.
March 13,1974	Tennessee Department of Public Health, Nashville, Tennessee	Discussion of environmental issues which should be addressed in the ER as well as environmental monitoring programs which are planned for the Demonstration Plant Project.
March 14,1974	TVA, Knoxville, Tennessee	Discussion of requirements for construction practices in order to minimize environmental impact.
March 14,1974	City Officials, Oak Ridge, Tennessee	Discussion of construction activities and their related social impact.
March 14,1974	Roane County Officials, Kingston, Tennessee	Discussion of the review procedure of the CRBRP-ER. Discussion of local, city and county codes, regulations and requirements applicable to the CRBRP, as well as social impacts related to the Demonstration Plant Project.
March 14,1974	East Tennessee Development District, Knoxville, Tennessee	

(Continued)

TABLE 12.0-2 (Continued)

Date	Agency	Discussion
March 29,1974	EPA, Region IV, Atlanta Georgia	Meeting with Deputy Administrator of Region IV to discuss CRBRP operations and related plant releases. Discussion included Project plans for pre-construction monitoring, construction activities, balance of plant, releases and provisions for material handling.
April 10,1974	AEC Licensing, Bethesda, Maryland	Discussion of site licensing requirements.
April 18,1974	EPA, Headquarters, Washington, D.C.	Discussion of Steam and Electric Power Generation Guidelines, published in the Federal Register on March 4,1974.

1.1 REFERENCE

1. Draft Environmental Statement, Liquid Metal Fast Breeder Reactor Program, U.S. Atomic Energy Commission, WASH-1535, March 1974.

1.2 REFERENCES

1. Draft Environmental Statement, Liquid Metal Fast Breeder Reactor Program, U.S. Atomic Energy Commission, WASH-1535, March 1974.

1.3 REFERENCES

1. U.S. Energy Outlook in a Report of the National Petroleum Councils Committee on U.S. Energy Outlook, December 1972.

2. U.S. Atomic Energy Commission, Updated (1970) Cost-Benefit Analysis of the U.S. Breeder Reactor Program, WASH-1184, January 1972.

3. Annual Hearings on U.S. Atomic Energy Commission Programs, Hearings before Senate Committee on Appropriations, FY 1967 through FY 1971, U.S. Government Printing Office.

4. Annual Hearings on U.S. Atomic Energy Commission Programs, Hearings before House Committee on Appropriations, FY 1967 through FY 1971, U.S. Government Printing Office.

5. David, E. E., Science Advisor to the President, remarks before Annual Convention of the Edison Electric Institute, Cleveland, Ohio, June 9, 1971.

6. Ayers, T. G., President, Commonwealth Edison Co., Intensified R&D--A Time for Decision, remarks before Annual Convention of the Edison Electric Institute, Cleveland, Ohio, June 7, 1971.

7. Statement of Honorable Rogers C. B. Morton, Secretary of the Interior, before the Senate Committee on Interior and Insular Affairs, Hearings on National Energy Policy, June 15, 1971.

8. Statement of L. A. DuBridge, Science Advisor to the President, before Joint Committee on Atomic Energy, Hearings on Environmental Effects of Producing Electric Power, Part 1, October 28, 1969.

9. Edison Electric Institute, Reactor Assessment Panel, EEI Publication No. 70-30, Report Prepared for the EEI Policy Committee on Atomic Power, New York, 1970.

10. Edison Electric Institute, Fast Breeder Reactor Report, EEI Publication No. 68-28, Report Prepared for the EEI Policy Committee on Atomic Power, New York, 1968.

11. American Public Power Association, Statement of National Power Policy, APPA, Washington, D. C., April 29, 1970.

12. Statement of Milton Shaw, Director, Division of Reactor Development and Technology, before Joint Committee on Atomic Energy, FY 1974 Authorization Hearings, March 14, 1973.

13. U.S. Atomic Energy Commission, LMFBR Demonstration Plant Program, Proceedings of Senior Utility Steering Committee and Senior Utility Technical Advisory Panel for the Period April 1971 thru January 1972, WASH-1201, March 1972.

14. U.S. Atomic Energy Commission, Special Analytic Study 69-C, LMFBR Demonstration Plants, October 1969.

15. U.S. Atomic Energy Commission, Cost-Benefit Analysis of the U.S. Breeder Reactor Program, WASH-1126, April 1969.

16. U.S. Atomic Energy Commission, Updated (1970) Cost-Benefit Analysis of the U.S. Breeder Reactor Program, WASH-1184, January 1972.

2.2 REFERENCES

1. Tennessee General Social and Economic Characteristics - 1970 Census of Population, U.S. Department of Commerce.

2. Population Projections for the Tennessee Valley Region, by County by Decades to 2020, Tennessee Valley Authority, Division of Navigation Development and Regional Studies, Economic Research Staff, October 1972.

3. Maps - Recreational Areas on Watts Bar, Melton Hill and Fort Loudoun Lakes.

4. Visits to TVA Dams and Steam Plant Project - 1971, Tennessee Valley Authority.

5. Journal of American Hospital Organization.

6. Telecons to County Agents, Emerson Ivers (Anderson Co.), Bob Gilley (Knox Co.), Charles McCall (Loudon Co.), Mr. Jensch (Morgan Co.) and K. Sutton (Roane Co.).

7. Emory River Valley Summary of Resources, Emory River Watershed Development Associations.

8. Summary Data - 1969 Census of Agriculture, Tennessee, U.S. Department of Commerce.

9. Overall Economic Development Program for Morgan County, Tennessee, Morgan County Overall Economic Development Committee.

10. Comprehensive Plan, Roane County, Tennessee, December 1971.

11. Telecon, Mattoon, P., WESD to McClain, B., Tennessee Urban Transportation Department, Traffic Statistics, October 29, 1973.

12. Thornbury, W. D., Principles of Geomorphology, John Wylie and Sons, New York, 1960.

2.3 REFERENCES

1. National Registry of Natural Landmarks, cumulative revision in the Federal Register, Washington, D. C., January 29, 1972.

2. Federal Register, Washington, D. C., Vol 33, No. 56, March 21, 1968, p 4837.

3. Schroedl, G. F., Archaeological Reconnaissance and Test Excavation in the Clinch River Liquid Metal Fast Breeder Reactor Plant Site Area, December 1972.

4. Thomas, P. M., Jr., A Map of Two Historical Sites in the Clinch River Liquid Metal Fast Breeder Reactor Plant Area, March 26, 1973.

5. Letter, Harper, H. L., Director of Field Services, Tennessee Historical Commission, to Roark, R., Division of Reservoir Properties, TVA, June 5, 1973.

6. University of Tennessee, Site Survey Records for Roane County, Tennessee, on file, McClung Museum, University of Tennessee, Knoxville, no date.

7. Schroedl, G. F., Test Excavations at 40RE124 in the Clinch River Liquid Metal Fast Breeder Reactor Plant Area, March 26, 1973.

8. Thomas, C., Report on the Mound Explorations of the Bureau of Ethnology, Twelfth Annual Report of the Bureau of American Ethnology, Washington, D. C., 1894.

9. McNutt, C. H., and Fischer, F. W., Archaeological Investigations in the Upper Melton Hill Reservoir; Anderson County, Tennessee, 1960, Report submitted to the National Part Service, Knoxville, Tennessee, 1960.

10. McNutt, C. H., and Graham, J. B., Archaeological Investigations in the Lower Melton Hill Reservoir; Anderson, Knox, Loudon and Roane Counties, Tennessee, 1961, Report submitted to the National Park Service, Knoxville, Tennessee, 1961.

11. Schroedl, G. F., Salvage Archaeology in the Clinch River Liquid Metal Fast Breeder Reactor Plant Area, no date.

12. Schroedl, G. F., Salvage Archaeology in the Clinch River Liquid Metal Fast Breeder Reactor Plant Area, Progress Report, October 1973.

13. Schroedl, G. F., Salvage Archaeology in the Clinch River Liquid Metal Fast Breeder Reactor Plant Area, Progress Report, November 1973.

14. Schroedl, G. F., Salvage Archaeology in the Clinch River Liquid Metal Fast Breeder Reactor Plant Area, Progress Report, December 1973.

15. Schroedl, G. F., Salvage Archaeology in the Clinch River Liquid Metal Fast Breeder Reactor Plant Area, Progress Report, January 1974.

2.4 REFERENCES

1. Rodgers, J., The Tectonics of the Appalachians, Wiley-Interscience, New York, 1970.

2. McMaster, W. M., Geologic Map of the Oak Ridge Reservation, Tennessee, Oak Ridge National Laboratory, Health Physics Division, ORNL-TM-713, 1963.

3. Tennessee Valley Authority, Watts Bar PSAR, 1970.

4. Tennessee Valley Authority, Foundation Investigations, Clinch River Site, 1973.

5. Milici, R. C., The Stratigraphy of Knox County, Tennessee, G.S.A. Southeastern Section Meeting at Knoxville, Tennessee Division of Geology, Bulletin 70, April 11-14, 1974, pp 9-24.

6. Clark, G. M., Some Geomorphic Aspects and Problems Related to the Knox County Area, Tennessee, G.S.A. Southeastern Section Meeting at Knoxville, Tennessee Division of Geology, Bulletin 70, April 11-14, 1973, pp 1-8.

7. Kellberg, J. J., Engineering Geology of Knox County, Tennessee, G.S.A., Tennessee Division of Geology, Bulletin 70, 1973.

8. Rodgers, J., Geologic Map of East Tennessee with Explanatory Text, Tennessee Department of Conservation, Division of Geology, Bulletin 58, Part II, 1953, pp 11-148.

9. Rodgers, J., Chronology of Tectonic Movements in the Appalachian Region of Eastern North America, American Journal of Science, Vol 265, No. 5, 1967, pp 408-427.

10. Personal communication on Valley and Ridge Geology, Moneymaker, R. H., Chief Geologist (retired), Tennessee Valley Authority, to Carter, R., Law Engineering Testing Company, 1973.

11. Swingle, G. D., Structural Geology of Knox County, Tennessee, G.S.A. Southeastern Section Meeting at Knoxville, Tennessee Division of Geology, Bulletin 70, April 11-14, 1973, pp 63-73.

12. de Laguna, W., Tamura, T., Weeren, H. O., Struxness, E. G., McClain, W. C., and Secton, R. C., Engineering Development of Hydraulic Fracturing as a Method for Permanent Disposal of Radioactive Wastes, Oak Ridge National Laboratory, ORNL-4259, p 261.

13. Hunt C., Physiography of the United States, 1967.

14. Tectonic Map of the United States, U.S. Geological Survey and American Association of Petroleum Geologists, 1962.

15. Modification from the Geologic Map of North America, U.S. Geological Survey, 1965.

16. Groundwater Resources of East Tennessee, Tennessee Division of Geology, Bulletin No. 58, Plate 8, 1956.

2.5 REFERENCES

1. Floods on the Clinch River and East Fork Poplar Creek in Vicinity of Oak Ridge, Tennessee, Tennessee Valley Authority, Division of Water Control Planning, Report 05922, Knoxville, Tennessee, September 1959.

2. Drainage Areas for Streams in Tennessee River Basin, Tennessee Valley Authority, Division of Water Control Planning, Hydraulic Data Branch, Report No. 0-5829-R-2, Knoxville, Tennessee, March 1970.

3. U.S. Department of Interior, Compilation of Records of Surface Waters of the United States, through September 1950, Part 3-B, Cumberland and Tennessee River Basins, Geological Survey Water Supply Paper 1306, U.S. Government Printing Office, Washington, D. C., 1958.

4. U.S. Department of Interior, Compilation of Records and Surface Waters of the United States, October 1950 - September 1960, Part 3-B, Cumberland and Tennessee River Basins, Geological Survey Water Supply Paper 1726, U.S. Government Printing Office, Washington, D. C., 1964.

5. U.S. Department of Interior, Surface Water Supply of the United States, 1961-1965, Part 3, Vol 4, Ohio River Basin below Wabash River, Geological Survey Water Supply Paper 1910, U.S. Government Printing Offices, Washington, D. C., 1971.

6. U.S. Department of Interior, Geological Survey, Water Resources Division, Water Resources Data for Tennessee, 1967 and 1968 Annual Publications, Nashville, Tennessee, 1968 and 1969.

7. Operation of TVA Reservoirs, Tennessee Valley Authority, Division of Water Control Planning, River Control Branch, Annual Publications, Knoxville, Tennessee.

8. Tennessee Valley Authority, Hydraulic Data Branch Files.

9. Letter, Lesesne, E. H., Director of Water Control Planning, TVA, to Van Nort, P. S., General Manager, PMC, May 31, 1974.

10. Water Temperature of Streams and Reservoirs in the Tennessee River Basin, Tennessee Valley Authority, Division of Water Control Planning, Hydraulic Data Branch, Report No. 0-6608, Knoxville, Tennessee, September 1966.

11. Letter, Grant, J. L., Staff Hydrologist, Law Engineering Testing Company, to Valiulis, G., WESD, January 1974.

12. Letter with Attachments, Gartrell, P. H., Director of Environmental Research and Development, TVA, to Kelleghan, W. P., Assistant General Manager, PMC, November 20, 1972.

13. DeBuchananne, G. D., and Richardson, R. M., Ground-Water Resources of East Tennessee, Tennessee Department of Conservation, Division of Geology, Bulletin 58, Part 1, 1956.

14. LeGrand, H. E., and Stringfield, V. T., Water Levels in Carbonate Rock Terranes, Ground-Water, Vol 9, May - June 1971, pp 4-10.

15. LeGrand, H. E., and Stringfield, V. T., Development and Distribution of Permeability in Carbonate Aquifers, Water Resources Research, Vol 7, No. 5, October 1971, pp 1284-1294.

16. Stringfield, V. T., and LeGrand, H. E., Hydrology of Carbonate Rock Terranes, A Review, Journal of Hydrology, Vol 8, 1969, pp 349-376.

17. White, W. B., and Schmidt, V. A., Hydrology of a Karst Area in East-Central West Virginia, Water Resources Research, Vol 2, No. 3, 1966, pp 549-560.

18. Thornbury, W. D., Principles of Geomorphology, John Wiley and Sons, New York, 1969.

19. Environmental Monitoring for Oak Ridge Facilities, U.S. Atomic Energy Commission, USAEC Reports, UCC-ND-221 and UCC-ND-244.

20. Clinch River Study, U.S. Atomic Energy Commission, Oak Ridge National Laboratory, ORNL-4035.

2.6 REFERENCES

1. Local Climatological Data with Comparative Data, 1964, Oak Ridge, Tennessee, Area Station (X-10), U.S. Department of Commerce, NOAA, National Weather Records Center, Asheville, N. C.

2. Daily, Monthly, and Annual Climatological Data for Oak Ridge, Tennessee, Townsite and Area Stations - January 1951 through December 1971, U.S. Department of Commerce, NOAA, ATDL, Oak Ridge, Tennessee, July 1972.

3. Local Climatological Data with Comparative Data, through October 1974, Knoxville Airport, U.S. Department of Commerce, NOAA, National Weather Records Center, Asheville, N. C.

4. Local Climatological Data with Comparative Data, through October 1974, Oak Ridge, Tennessee, Weather Service Office, U.S. Department of Commerce, NOAA Environmental Research Laboratories, ATDL, Oak Ridge, Tennessee.

5. Climates of the States, Tennessee: Climatography of the United States, No. 60-40, U.S. Department of Commerce, Weather Bureau, Washington, D. C.

6. Climatic Atlas of the United States, U.S. Department of Commerce, ESSA, Environmental Data Service, Washington, D. C., June 1968.

7. Janick, J., Schery, R. W., Woods, F. W., and Ruttan, V. W., Plant Science an Introduction to World Crops, W. H. Freeman and Company, San Francisco, 1969.

8. Maximum Recorded United States Point Rainfall for 5 Minutes to 24 Hours at 296 First Order Stations, Technical Paper No. 2, U.S. Department of Commerce, Weather Bureau, Revised 1963.

9. Rainfall Frequency Atlas of the United States, Technical Paper No. 40, U.S. Department of Commerce, Weather Bureau, 1963.

10. Glaze - Its Meteorology and Climatology, Geographical Distribution, and Economic Effects, Technical Report EP-105, Quartermaster Research and Engineering Command, Natick, Mass., March 1959.

11. Changnon, S. A., Jr., Examples of Economic Losses from Hail in the United States, Journal of Applied Meteorology, Vol 11, No. 7, 1972, pp 1128-37.

12. Vaiksnoras, J. V., Tornado Occurrences in Tennessee, 1916-1970, State Climatologist for Tennessee, National Weather Service Office, Nashville, Tennessee, April 15, 1971.

13. Vaiksnoras, J. V., Tornadoes in Tennessee (1916-1970) With Reference to Notable Tornado Diasters in the United States (1880-1970), University of Tennessee, Institute for Public Service, Knoxville, Tennessee, revised October 1972.

14. Pantz, M. E., Severe Local Storm Occurrences, 1955-1967, ESSA Technical Memorandum WBTM FCST 12, ESSA, Silver Springs, Md., 1969.

15. Court, A., Tornado Incidence Maps, ESSA Technical Memorandum ERLTM-NSSL 49, National Severe Storms Laboratory, Norman, Oklahoma, 1970.

16. Thom, H. C. S., Tornado Probabilities, Monthly Weather Review, Vol 91, No. 10-12, October-December 1963, pp 730-736.

17. Vaiksnoras, J. V., Tennessee Tornadoes - 1971 and 1972, Data Reproduced in Storm Data, U.S. Department of Commerce, National Oceanic and Atmospheric Administration, Environmental Data Service.

18. Thom, H. C. S., New Distribution of Extreme Winds in the United States, Journal of the Structural Division, Proceedings of the American Society of Civil Engineers, July 1968, pp 1787-1799.

19. Local Climatological Data with Comparative Data, 1973, Chattanooga, Tennessee, U.S. Department of Commerce, NOAA, National Weather Record Center, Asheville, N. C.

20. Some Devastating North Atlantic Hurricanes of the 20th Century, U.S. Department of Commerce, NOAA/PA 70024, 1971.

21 Hosler, C. R., Low-Level Inversion Frequency in the Contiguous United States, Monthly Weather Review, Vol 89, No. 9, September 1961, pp 319-339.

22. Holzworth, G. C., Estimates of Mean Maximum Mixing Depths in the Contiguous United States, Monthly Weather Review, Vol 92, No. 5, May 1964, pp 235-242.

23. Holzworth, G. C., Mixing Heights, Wind Speed and Potential for Urban Air Pollution Throughout the Contiguous United States, Environmental Protection Agency, January 1972.

24. Fog Occurrence and Fog Station Description at Melton Hill Reservoir at the Dam, Melton Hill Reservoir - Clinch River at Bull Run Creek and Melton Hill Reservoir at Clinton, Tennessee, Jan. 1964-Oct. 1970, Tennessee Valley Authority, Hydraulic Data Branch.

25. Monthly and Annual Joint Percentage Frequencies of Wind Direction and Wind Speed for Different Stability Classes (Pasquill A-G) for Oak Ridge Area Station X-10, Dec. 1971-Nov. 1972, Tennessee Valley Authority, Air Quality Branch, Muscle Shoals, Alabama.

26. Monthly and Annual Joint Percentage Frequencies of Wind Direction and Wind Speed for Different Stability Classes (Pasquill A-G) for Oak Ridge Area Station X-10, Jan. 1963-Dec. 1968, Tennessee Valley Authority, Air Quality Branch, Muscle Shoals, Alabama.

27. Slade, D. H., Ed., Meteorology and Atomic Energy 1968, U.S. AEC Division of Technical Information, Springfield, Va. 22151.

28. Norwine, J. R., Heat Island Properties of an Enclosed Multi-Level Surburban Shopping Center, Bulletin of the American Meteorological Society, Vol 54, No. 7, July 1973, pp 637-641.

29. Hinds, W. T., Diffusion Over Coastal Mountains of Southern California, Atmospheric Environment, Vol 4, No. 2, March 1970, pp 107-124.

30. AEC Regulatory Guide No. 1.4.

31. Letter, Kornasiewicz, R., Meteorologist, U.S. AEC, to Van Vleck, L. D., WESD, September 1973.

2.7 REFERENCES

1. Telecon, Sutton, K., County Agent, Roane County, Tennessee, to Myers, D. W., WESD, July 6, 1973.

2. Bradburn, D., Page 10 of revised minutes of April 16 and 17, 1973 meeting in Oak Ridge, Tennessee with ORNL Environmental Sciences Division to discuss source material for ER and SR for CRBRP.

3. Telecon, Bradburn, D., ORNL Environmental Sciences Division, to Beimborn, W. A., WESD, May 2, 1974.

4. Soil Survey, Roane County, Tennessee, U.S. Department of Agriculture, Bureau of Plant Industry, May 1942.

5. Peters. L. N., Grigal, D. F., Curlin, J. W., and Selvidge, W. J., Chemical, Physical and Morphological Properties of the Soils of Walker Branch Watershed, ORNL-TM 2968, 1971.

6. Letter, Williams, G., Jr., Assistant Manager of Power, TVA, to Van Nort, P. S., General Manager, PMC, July 19, 1974.

7. Soil Conservation Service, Soil Survey Interpretations for Woodlands in the Cumberland Plateau and Mountains and the Southern Appalachian Ridges and Valleys of Alabama, Georgia, and Tennessee, U.S. Department of Agriculture, Fort Worth, Texas, 1969.

8. Olson, J. S., Preliminary Alphabetic Inventory of Vascular Plants, ORNL-TM-1232, February 1966.

9. Letter, Holland, Dr. F., TVA, Chattanooga, Tennessee, to Herr, H. F., WESD, April 1973.

10. Brockman, F. C., Trees of North America, Western Publishing Co., Inc., Racine, Wasconsin, 1968.

11. Smith, D. M., The Practice of Silviculture, John Wiley & Sons, Inc., N. Y., 7th edition, 1962, p 578.

12. Forbes, R. D. (editor), Forestry Handbook, The Ronald Press Company, N. Y., 1961.

13. Kuchler, A. W., Potential Natural Vegetation of the Conterminous United States, map scale 1 = 3,168,000, American Geographical Society, Special Publication Number 36, New York, 1961.

14. Taylor, F. G., Phenological Records of Vascular Plants at Oak Ridge, Tennessee, ORNL-IBP-69-1, December 1969.

15. Telecon, Clebsch, E. C., Botanical Consultant to Bender, M. C., WESD, July 10, 1974.

16. Howell, J. C., and Dunaway, P. B., Long Term Ecological Study of the Oak Ridge Area: II. Observations on Mammals with Special Reference to the Melton Valley Area, October 26, 1959.

17. Story, J. D., Oak Ridge National Laboratory, Environmental Sciences Division, Unpublished list of mammals observed or trapped on the Oak Ridge Reservation.

18. Burt, W. H., and Grossenheider, R. P., A Field Guide to the Mammals, Houghton Mifflin, Co., Boston, Massachusetts, 1958.

19. Robbins, C. S., Broun, B., and Zim, H. S., Birds of North America, Western Publishing Co., Inc., Racine, Wisconsin, 1966.

20. Shugart, H. H., Oak Ridge National Laboratory, Environmental Sciences Division, Unpublished list of avifauna of the Oak Ridge Reservation, May 9, 1974.

21. Howell, J. C., Long-Range Ecological Study of the Oak Ridge Area: I. Observations on the Summer Birds in Melton Valley, June 3, 1958.

22. Anderson, S. H., and Shugart, H. H., Jr., Habitat Selection of Breeding Birds in an East Tennessee Deciduous Forest.

23. Letter from Bray, H. G., Director, Tennessee Wildlife Resources Agency, Nashville, Tennessee, to Norris, S. H., General Review Coordinator, Office of Urban and Federal Affairs, Nashville, Tennessee, July 26, 1974.

24. Conant, R., A Field Guide to Reptiles and Amphibians, Houghton Mifflin, Co., Boston, Massachusetts, 1965.

25. Tennessee Game and Fish Commission, Amphibians and Reptiles of Tennessee, Nashville, Tennessee, 1965.

26. Johnson, R. M., Herpetofauna of the Oak Ridge Area, ORNL-3653, December 1964.

27. Oak Ridge National Laboratory, Environmental Sciences Division, Unpublished list of forest invertebrate fauna of the Oak Ridge Reservation.

28. Bureau of Sport Fisheries and Wildlife, Fish and Wildlife Service Threatened Wildlife of the United States, 1973 edition, Resource Publication 114, United States Department of the Interior, March 1973.

29. Telecon, Shugart, H. H., et al, Oak Ridge National Laboratory, Environmental Sciences Division, to Myers, D. W., WESD, June 28, 1973, Rare Birds of the Oak Ridge Area.

30. Tennessee Valley Authority, Division of Forestry and Wildlife Development, A Checklist of Birds of the Tennessee Valley, Norris, Tennessee, 1974.

31. Department of Commerce, Bureau of Census, Summary Data -- Census of Agriculture Part 31, Tennessee, Section 1, Washington, D. C., 1969.

32. Comprehensive Plan for Water Quality Management in the Tennessee Valley, subtitled Water Quality, Including Needed Improvements, in the Tennessee Valley -- 1969, Tennessee Valley Authority, Volumes I and II, Unpublished Report.

33. Environmental Monitoring for Oak Ridge Facilities, U.S. Atomic Energy Commission, USAEC Reports, UCC-ND-221 and UCC-ND-244.

34. Biological Survey at Bullrun Steam Plant Melton Hill Reservoir, Tennessee, Report by TVA, Division of Health and Safety and Water Quality Branch, Chattanooga, Tennessee, 1969.

35. Bullrun Steam Plant Fish Investigation, Project Report, TVA Fish and Wildlife Branch, Norris, Tennessee, 1969.

36. Biological Survey Kingston Steam Plant Survey, Clinch and Emory Rivers, Watts Bar Reservoir, Tennessee, TVA, Division of Health and Safety Water Quality Branch, Chattanooga, Tennessee, March 1968.

37. National Technical Advisory Committee, Federal Water Pollution Control Association, Water Quality Criteria, U.S. Government Printing Office, Washington, D. C., 1968.

38. Odum, E. P., Fundamentals of Ecology, W. B. Saunders Company, Philadelphia, 3rd edition, 1971.

39. Spraque, J. B., Measurement of Pollutant Toxicity to Fish. II. Utilizing and Applying Bioassay Results, Water Research, Vol 4, 1970, pp 3-32.

40. Tennessee Water Quality Control Board, General Water Quality Criteria for the Definition and Control of Pollution in the Waters of Tennessee, adopted on May 26, 1967, amended on November 17, 1967; May 22, 1970; October 26, 1971; December 14, 1971; and October 30, 1973.

41. Sawyer, C. N., and McCarty, P. L., Chemistry for Sanitary Engineers, McGraw-Hill Book Company, New York, 1967.

42. Personal communication, Kupiec, A., President, Penn Environmental Consultants, Pittsburgh, Pennsylvania, with Valiulis, G., WESD, June 26, 1974.

43. Mackenthum, K. M., The Practice of Water Pollution Biology, U.S. Department of Interior, Federal Water Pollution Control Administration, Division of Technical Support, 1969.

44. Letter, Mazinski, R., Project Manager, Penn Environmental Consultants, to Tweed, S. M., WESD, December 13, 1974.

45. U. S. Environmental Protection Agency, Proposed Criteria for Water Quality, Vol 1, October 1973.

46. Biological Field and Laboratory Methods for Measuring the Quality of Surface Waters and Effluents, EPA National Environmental Research Center, Analytical Quality Control Laboratory, Cincinnati, Ohio, 1973.

47. Mason, B., Principles of Geochemistry, John Wiley and Sons, Inc., New York, Second Edition, 1960, p 310.

48. Biological Analysis of Water and Wastewater, AM302, Millipore Corporation, Bedford, Massachusetts, 1972.

49. Lackey, J. B., The Suspended Microbiota of the Clinch River and Adjacent Waters in Relation to Radioactivity in the Summer of 1956, Oak Ridge National Laboratory Publication No. 2410, 1958.

50. Personal Communication, Findley, D., Austin Peay State University, Clarksville, Tennessee, to Valiulis, G., WESD, July 23, 1974.

51. Taylor, M. P., Phytoplankton Productivity Response to Nutrients Correlated With Certain Environmental Factors in Six TVA Reservoirs, Reservoir Fisheries and Limnology, No. 8, American Fisheries Society, 1971, pp 209-217.

52. Unpublished data provided by Isom, B. G., TVA Environmental Biology Branch, Muscle Shoals, Alabama, June 1974.

53. Letter, Bunting, D., University of Tennessee, Knoxville, Tennessee, to Valiulis, G., WESD, July 6, 1974.

54. Doyle, W. T., Nonvascular Plants: Form and Function, Fundamentals of Botany Series, Wadsworth Publishing Co., Inc., Belmont, California, 1964.

55. Alexopoulos, C. J., and Bold, H. C., Algae and Fungi, The Macmillan Company, New York, 1967.

56. Telecon, Weber, C., Chief, Aquatic Biology Section, Environmental Protection Agency, Cincinnati, Ohio, to Tweed, S. M., WESD, December 12, 1974.

57. Weber, C. I., Recent Development in the Measurement of the Response of Plankton and Periphyton to Changes in Their Environment, Bioassay Techniques and Environmental Chemistry, Ann Arbor Science Publishers, Inc., 1973.

58. Taylor, M. P., Thermal Effects on the Periphyton Community in the Green River 1966, 1968 and 1970, TVA, Division of Environmental Planning, Muscle Shoals, Alabama, February 1973.

59. Isom, B. G., and Brown, R. N., Benthic Survey of the Clinch River in the Vicinity of the Liquid Metal Fast Breeder Reactor, Short note dated March 27, 1974.

60. Mason, W. T., Chironomidae (Diptera) as Biological Indicators of Water Quality, presentation given at symposium on "Organisms and Biological Communities as Indicators of Environmental Quality" at Center for Tomorrow, Ohio State University, Columbus, Ohio, March 25, 1974.

61. Sinclair, R. M., and Isom, B. G., Further Studies on the Introduced Asiatic Clam (Corbicula) in Tennessee, Tennessee Pollution Control Board, Tennessee Department of Public Health, 1963.

*Gregg, W. O., Conchological Club of Southern California, Minutes 69, 1947, pp 3-4.

**Miyazaki, I., Skijimi no Hassei ni tsuite (On the Development of Bivalves Belonging to the Genus). Nihon Suisan Gakkaiski (Bull, of Japanese Society of Sci. Fisheries), 5"249-254, 1936.

+Icho, S., and Oshima, Y., Yobai Tukuhon (Textbook of Clam Culture), Sugiyama Schoten (Sugiyama Book Co.), 1938, pp 1-289.

62. Bickel, D., Ecology of Corbicula manilensis Philippi in the Ohio River at Louisville, Kentucky, Sterkiana, No. 23, 1966, pp 19-24.

63. Nelson, D. J., The Strontium and Calcium Relationships in Clinch and Tennessee River Mollusks, Proceedings 1st National Symposium Radioecology, 1963, pp 203-211.

64. Letter, Burch, J. B., Research Associate, University of Michigan to Nelson, D. J., ORNL, September 8, 1960.

65. Jaco, B. D., and Sheddan, T. L., TVA Fish Population Monitoring - LMFBR Demonstration Project, Unpublished Report, January 11, 1974.

66. Morton, R. J., Status Report No. 3 on Clinch River Study, Oak Ridge National Laboratory, Publication No. 3370, 1962.

67. Martin, R. E., Auerbach, S. I., and Nelson, D. J., Growth and Movement of Smallmouth Buffalo, Ictiobus bubalus (Rafinesque), in Watts Bar Reservoir, Tennessee, Oak Ridge National Laboratory, Publication No. 3530, 1964.

68. Letter, Sharber, J., Tennessee Wildlife Resources Agency, Nashville, Tennessee, to Valiulis, G., WESD, June 18, 1974.

69. Warren, E. C., Biology and Water Pollution Control, W. B. Saunders Co., Philadelphia, Pennsylvania, 1971.

70. Carlander, K. D., Handbook of Freshwater Fishery Biology, Vol I, The Iowa State University Press, Ames, Iowa, 1969.

71. Letter, Seawell, W., Tennessee Game and Fish Commission, Nashville, Tennessee,to Colick, J., WESD, March 13, 1974.

72. Letter, Allen, E. C., U.S. Department of Commerce, National Oceanic and Atmospheric Administration, citing Hubert, W., TVA,to Colick, J., WESD, March 1, 1974.

73. Lagler, K. F., Bardach, J. E., and Miller, R. R., Ichthyology, Fourth edition ,John Wiley and Sons, New York, 1967.

74. Letter, Linton, K. D., Clarion State College, Clarion, Pennsylvania, to Valiulis, G., WESD, July 1, 1974.

75. Scott, W. B., and Crossman, E. J., Freshwater Fishes of Canada, Bulletin 184, Fisheries Research Board of Canada, Ottawa, 1973.

76. Hubbs, D. L., and Lagler, K. F., Fishes of the Great Lakes Region, University of Michigan Press, Ann Arbor, 1964.

77. Personal Communication, Walker, W. H., Seton Hill College, Greensburgh, Pennsylvania, to Valiulis, G., WESD, June 20, 1974.

78. Federal Register, Vol 39, No. 3, January 4, 1974, pp 1171-1175.

2.8 REFERENCES

1. Environmental Monitoring Report, United States Atomic Energy Commission, Oak Ridge Facilities, Calendar Year 1971, UCC-ND-221, Technical Information Center, Oak Ridge National Laboratory, Tennessee, June 1972.

2. Environmental Monitoring Report, United States Atomic Energy Commission, Oak Ridge Facilities, Calendar Year 1972, UCC-ND-244, Technical Information Center, Oak Ridge National Laboratory, Tennessee, March 1973.

3. Telecon, Colick, J., WESD to Gupton, E., Oak Ridge National Laboratory, Health Physics Division, December 6, 1973.

4. U.S. Environmental Protection Agency, Radiation Data and Reports, Vol 13, May 1972, pp 269 and 282.

5. U.S. Environmental Protection Agency, Radiation Data and Reports, Vol 13, July 1972, pp 404 and 407.

6. Letter, Auxier, J. A., Health Physics Division to Colick, J., WESD, November 29, 1973.

7. Letter, Welty, C. G., Jr., Division of Operational Safety, AEC to Colick, J., WESD, January 3, 1974.

8. Letter, Logsdon, J. E., Surveillance Branch, EPA to Terrill, J. G., Jr., WESD, November 12, 1973.

9. U.S. Environmental Protection Agency, Radiation Data and Reports, Vol 14, January 1973, pp 29 and 34.

10. Telecon, Colick, J., WESD to Davis, D. M., Oak Ridge National Laboratory, August 16, 1974.

11. Jinks, S. M., and Eisenbud, M., Concentration Factors in the Aquatic Environment, U.S. Environmental Protection Agency, Radiation Data and Reports, Vol 13, No. 5, 1972, p 243-247.

12. Pickering, R. J., Distribution of Radionuclides in Bottom Sediment of the Clinch River, East Tennessee, Geological Survey Prof. Paper 433H, U.S. Gov't Printing Office, 1969.

13. Comprehensive Report of the Clinch River Study, Health Physics Division, Oak Ridge National Laboratory, Tennessee, April 1967.

14. Carrigan, P. H., Jr., Inventory of Radionuclides in Bottom Sediment of the Clinch River, East Tennessee, Geological Survey Prof. Paper 433I, U.S. Gov't Printing Office, 1969.

15. Friend, A. G., et al, Behavior of Certain Radionuclides Released Into Fresh Water Environments, Annual Report, 1959-1960, National Center for Radiological Health, U.S. Department of Health, Education and Welfare, Rockville, Md., June 1965, pp 47-49.

16. Letter with Appendices, Davis, D. M., Oak Ridge National Laboratory to Herr, H. F., WESD, July 27, 1973.

17. The Effects on Populations of Exposure to Low Levels of Ionizing Radiation, Report of the Advisory Committee on the Biological Effects of Ionizing Radiation, National Academy of Sciences, National Research Council, Washington, D. C., November 1972, p 29.

18. U.S. Environmental Protection Agency, Radiation Data and Reports, Vol 13, April 1972, pp 200 and 209.

19. U.S. Environmental Protection Agency, Radiation Data and Reports, Vol 13, August 1972, pp 432 and 436.

20. U.S. Environmental Protection Agency, Radiation Data and Reports, Vol 14, April 1973, p 242.

21. Background Material for the Development of Radiation Protection Standards, Report No. 2, Federal Radiation Council, September 1961.

22. Klement, A. W., Miller, C. R., Minx, R. P., and Schleien, B., Estimates of Ionizing Radiation Doses in the United States 1960-2000, Special Studies Group, Division of Criteria and Standards, Office of Radiation Programs, EPA, ORP/CSD, 72-1, August 1972, pp 10, 12, 16, 19, 56, 101, 102 and 160.

23. Oakley, D. T., Natural Radiation Exposure in the United States, ORP/SID, 72-1, Environmental Protection Agency, Washington, D. C. 20460.

24. Final Safety Analysis Report, Sequoyah Nuclear Plant, Docket Nos. 50-327 and 50-328, October 1968.

25. U.S. Environmental Protection Agency, Radiation Data and Reports, Vol 13, October 1972, p 558.

26. U.S. Environmental Protection Agency, Radiation Data and Reports, Vol 12, September 1971, p 512.

27. U.S. Environmental Protection Agency, Radiation Data and Reports, Vol 12, October 1971, p 512.

28. U.S. Environmental Protection Agency, Radiation Data and Reports, Vol 12, November 1971, p 572.

29. U.S. Environmental Protection Agency, Radiation Data and Reports, Vol 13, January 1972, pp 38-39.

30. U.S. Environmental Protection Agency, Radiation Data and Reports, Vol 13, February 1972, p 80.

31. U.S. Environmental Protection Agency, Radiation Data and Reports, Vol 13, March 1972, p 142.

32. U.S. Environmental Protection Agency, Radiation Data and Reports, Vol 13, May 1972, p 283.

33. U.S. Environmental Protection Agency, Radiation Data and Reports, Vol 13, June 1972, pp 361 and 369.

34. U.S. Environmental Protection Agency, Radiation Data and Reports, Vol 13, July 1972, p 408.

35. U.S. Environmental Protection Agency, Radiation Data and Reports, Vol 13, August 1972, p 444.

36. U.S. Environmental Protection Agency, Radiation Data and Reports, Vol 13, September 1972, pp 490 and 515.

37. U.S. Environmental Protection Agency, Radiation Data and Reports, Vol 13, October 1972, p 567.

38. U.S. Environmental Protection Agency, Radiation Data and Reports, Vol 13, November 1972, pp 631 and 638.

39. U.S. Environmental Protection Agency, Radiation Data and Reports, Vol 13, December 1972, pp 686 and 699.

40. U.S. Environmental Protection Agency, Radiation Data and Reports, Vol 14, January 1973, p 37.

41. U.S. Environmental Protection Agency, Radiation Data and Reports, Vol 14, February 1973, p 117.

42. U.S. Environmental Protection Agency, Radiation Data and Reports, Vol 14, March 1973, p 204.

43. U.S. Environmental Protection Agency, Radiation Data and Reports, Vol 14, April 1973, p 258.

44. Morgan, K. Z., Snyder, W. S., and Davis D. M., Applied Health Physics and Safety, Annual Report for 1969, ORNL-4563, August 1970, p 29.

45. Morgan, K. Z., Snyder, W. S., and Davis D. M., Applied Health Physics and Safety, Annual Report for 1971, ORNL-4795, June 1972, pp 22-23.

3.4 REFERENCES

1. Westrom, G. K., and Ovard, J. C., Cooling Tower Drift, Its Measurement, Control and Environmental Effects, January 29, 1973.

3.5 REFERENCES

1. Letter, Kenney, J., WARD, to Balent, R., Atomics International (AI), April 3, 1974.

2. Letter, Morgan, W., AI to Jacobi, W. M., WARD, April 19, 1974.

3. Letter, Kenney, J., WARD to Balent, R., AI, May 13, 1974.

3.7 REFERENCES

1. Design of Extended Aeration Systems, Tennessee Department of Public Health, February 7, 1972.

2. Design of Supplementary (Tertiary) Treatment Systems, Tennessee Department of Public Health, April 14, 1972.

3. Letter, Unger, R. A., Environmental Engineer, Division of Water Quality Control, State of Tennessee, Department of Public Health to Young, W. H., CRBRP Project Manager, Burns & Roe, Inc., January 21, 1974.

3.8 REFERENCES

1. AI Report, TSR-099-410-001, Refueling Task Force Studies, Dwg. No. 02-30086, December 21, 1973.

3.9 REFERENCES

1. Soil Survey, Roane County, Tennessee, U.S. Department of Agriculture, Bureau of Plant Industry, May 1942.

4.1 REFERENCES

1. Telecopy, Zwickler, S., Manager of Licensing, Burns & Roe, Inc. to Ford, W. H., WESD, August 2, 1974.

2. Letter, Unger, R. A., Environmental Engineer, Division of Water Quality Control, State of Tennessee, Department of Public Health to Young, W. H., CRBRP Project Manager, Burns & Roe, Inc., January 21, 1974.

3. Noise From Construction Equipment and Operations, Building Equipment, and Home Appliances, NFID 300.1, U.S. Environmental Protection Agency, Washington, D. C., December 1971.

4.2 REFERENCES

1. Tennessee Valley Authority, Ecological Survey of CRBRP Transmission Lines - Proposed and Alternate Routes, 1974.

5.1 REFERENCES

1. Letter, Lesesne, E. H., Director of Water Control Planning, Tennessee Valley Authority to Van Nort, P. S., Project Management Corporation, May 31, 1974.

2. Letter, Ravan, J. E., Regional Adminstrator, Region 4, Environmental Protection Agency to Jones, S. L., Director of Division of Water Quality Control, Department of Public Health, State of Tennessee, Received by Tennessee Valley Authority, May 17, 1974.

3. Prosser, C. L., and Brown, F. A., Jr., Comparative Animal Physiology, Second Edition, W. B. Saunders Company, 1962, p 235.

4. Taylor, Mahlon P., Thermal Effects on the Periphyton Community in the Green River 1966, 1968 and 1970, Tennessee Valley Authority, Division of Environmental Planning, Environmental Biology Branch, Muscle Shoals, Alabama, February 1973.

5. Neill, W. H., and Magnuson, J. J., Distributional Ecology and Behavioral Thermoregulation of Fishes in Relation to Heated Effluent From a Steam-Electric Power Plant (Lake Monona, Wisconsin), The University of Wisconsin Resource Center, 1972.

6. Gammon, J. R., The Response of Fish Populations in the Wabash River to Heated Effluents, Proceedings of the Third National Symposium of Radioecology, May 10-12, 1971, Oak Ridge, Tennessee, Vol 1, 1971.

7. Coutant, C. C., and Pfuderer, H. A., Thermal Effects, Journal of Water Pollution Control Federation, Vol 45, No. 6, June 1973.

8. Coutant, C. C., and Goodyear, C. P., Thermal Effects, Journal of Water Pollution Control Federation, Vol 44, No. 6, June 1972.

9. Langford, T. E., The Distribution, Abundance and Life Histories of Stoneflies (Plecoptera) and Mayflies (Ephemeroptera) in a British River, Warmed by Cooling Water From a Power Station, Hydro-Biologia, Vol 38, 1970, pp 339-377.

10. Walshe, B. M., Oxygen Requirements and Thermal Resistance of Chiromid Larvae from Flowing and Still Water, Journal of Experimental Biology, Vol 25, 1948, p 35.

11. Stangenborg, M., and Pawlaczyk, 1961, The Influence of a Warm Water Influx From a Power Station Upon the Formation of Biocentric Communities in a River, Nouk, Pol. War., Uro-dow No. 40, Inzyn. Sanit., Vol 67, p 106, Water Pollution Abstract Vol 35, No. 3, Abstract Nol 579, 1962.

12. Coutant, C. C., The Effects of Heated Water Effluent Upon Macroinvertebrate, Riffle-fauna of the Delaware River, Proceedings of Pennsylvania Academy of Science, Vol 35, 1962, pp 58-71.

13. Wurtz, C. B., and Renn, C. E., Water Temperature and Aquatic Life, The John Hopkins University, Cooling Water Studies for Edison Electric Institute, Research Project RP-49, Sanitary Engineering and Water Resources, Baltimore, Maryland, June 1965, p 5.

14. Altman, P. L., and Dittner, D. S., Ed., Environmental Biology, Federation of American Societies for Experimental Biology, 1966.

15. Environmental Sciences Division, Annual Progress Report, Period Ending September 30, 1973, Oak Ridge National Laboratory, March 1974, pp 25-26.

16. Hart, J. S., Lethal Temperature Relations of Certain Fish of the Toronto Region, Transactions of the Royal Society of Canada, May 1947.

17. Hanna, Steven R., Conference Summary: Cooling Tower Environment - 1974, Environmental Research Laboratories, NOAA, Oak Ridge, Tennessee, March 1974.

18. National Academy of Sciences - National Academy of Engineering, National Research Council, Highway Research Board, Effects of Deicing Salts on Water Quality and Biota, Literature Review and Recommended Research, National Cooperative Highway Research Program Report No. 91, 1970.

19. U.S. Public Health Service, Drinking Water Standards, U.S. Department of Health, Education and Welfare, Publication No. 956, 1962.

20. Noise From Construction Equipment and Operation, Building Equipment and Home Appliances, NTID300.1, U.S. Environmental Protection Agency, December 31, 1971.

21. Bell, M. C., Fisheries Handbook of Engineering Requirements and Biological Criteria, Fisheries Engineering Research Program, Corps of Engineers, North Pacific Division, Portland Oregon, Contract No. DACW57-68-C-0086, 1973.

22. Rounsefell, G. A. and Everhart, W. H., Fishery Science - Its Methods and Applications, John Wiley and Sons, Inc., New York, 1953.

23. Anch, Heated Discharges . . . Their Effect on Streams, Report by the Advising Committee for the Control of Stream Temperatures to the Pennsylvania Sanitary Water Board, Pennsylvania Department of Health, Harrisburg, Publication No. 3, 1962, p 108.

24. Brett, J. R., Some Principles in the Thermal Requirements of Fish, The Quarterly Review of Biology, Vol 31, No. 2, June 1966.

25. Hart, J. S., Geographic Variations of Some Physiological and Morphological Characters in Certain Freshwater Fish, University of Toronto Biological Series No. 60, Publications of the Ontario Fisheries Research Laboratory, No. LXXII, 1952.

26. Pitt, J. K., Garside, E. J., and Hepburn, R. L., Temperature Selection of Carp (Cyprinus carpion Linn.), Canadian Journal of Zoology, Vol 34, 1956, pp 355-557.

5.2 REFERENCES

1. International Commission on Radiological Protection, ICRP Publication 2, Report of Committee II on Permissible Dose for Internal Radiation, Table 12, Pergamon Press, 1959, pp 154-230.

2. Fletcher, J. F., and Dotson, W. L., Hermes--A Digital Computer Code for Estimating Regional Radiological Effects from the Nuclear Power Industry, HEDL-TME-71-168, U.S. AEC, December 1971.

3. Reichle, D. E., Dunaway, P. B., and Nelson, D. J., Turnover and Concentration of Radionculides in Food Chains, Nuclear Safety, Vol 11, 1970, pp 43-55.

4. Auerbach, S. I., Ecological Consideration in Siting Nuclear Power Plants: The Long-Term Biotic Effects Problem, Nuclear Safety, Vol 12, Jan-Feb. 1971, pp 25-34.

5. Childs, H. E., Jr., and Cosgrove, G. E., A Study of Pathological Conditions in Wild Rodents in Radioactive Areas, The American Midland Naturalist, Vol 76, 1966, pp 309-324.

5.3 REFERENCES

1. U.S. Department of Defense, The Effects of Nuclear Weapons, (Glaston, S., Editor), Revised Edition, U.S. AEC, Washington, D. C., 1962.

2. Recommendations of the International Commission on Radiological Protection, Report of Committee II on Permissible Dose for Internal Radiation, ICRP Publication 2, Pergamon Press, New York, New York, 1959.

3. United States Atomic Energy Commission Rules and Regulations Title 10, Part 20, Standards for Protection Against Radiation, December 31, 1968 and Amendments February 5, May 8, November 28, 1970 and November 5, 1973.

4. Lederer, C. M., Hollander, J. M., and Perlman, I., Table of Isotopes, Sixth Edition, John Wiley & Sons, Inc., 1967.

5. Bond, V. P., Evaluation of Potential Hazards from Tritium Water, Environmental Effects of Producing Electric Power, Hearings before the Joint Committee on Atomic Energy, Congress of the United States, Vol I, Part 2, U.S. Government Printing Office, Washington, D. C., 1970, pp 1374-1382.

6. Thompson, R. C., and Ballou, J. E., Studies of Metabolic Turnover with Tritium as a Tracer, Journal of Biology and Chemistry, Vol 223, 1956, pp 795-809.

7. Pinson, E., and Langham, W., Physiology and Toxicology of Tritium in Man, Journal of Applied Physiology, Vol 10, 1957, pp 108-126.

8. Elwood, J. W., Tritium Behavior in Fish from a Chronically Contaminated Lake, Third National Symposium on Radioecology, Oak Ridge, Tennessee, 1971.

9. Harrison, F. L., and Koranda, J. K., Tritiation of Aquatic Animals in an Experimental Freshwater Pond, Third National Symposium on Radioecology, Oak Ridge, Tennessee, 1971.

10. Telecon, Colick, J., WESD, to Hatcher, R. M., Tennessee Game and Fish Commission, Nashville, Tennessee, June 15, 1974.

11. Letter, Seawell, William, Tennessee Game and Fish Commission, Knoxville, Tennessee, to Colick, J., WESD, March 13, 1974.

12. Watts Bar-Fish and Fishing, Tennessee Valley Authority, Tennessee Game and Fish Commission, 1965.

13. Telecon, Colick, J., WESD, to Robinette, F. R., Kingston, Tennessee, July 8, 1974.

14. Effects on Populations of Exposure to Low Levels of Ionizing Radiation, Report of the Advisory Committee on the Biological Effects of Ionizing Radiations, National Academy of Sciences, National Research Council, Washington, D. C. 20006, November 1972, p 12.

15. Pillai, K. C., Smith, R. C., and Folsom, T. R., Plutonium in the Marine Environment, Nature, 1964, pp 568-571.

16. Dix, G. P., and Dobry, T. J., Critical Parameters in Plutonium Safety Evaluations, Health Physics, Vol 22, 1972, pp 569-574.

17. Oakley, D. T., Natural Radiation Exposure in the United States, U.S. Environmental Protection Agency, Washington, D. C. 20460, ORP/SID, 72-1, June 1972.

18. Draft Environmental Statement for Liquid Metal Fast Breeder Reactor Program, WASH-1535, U.S. AEC, March 1974.

19. The Metabolism of Compounds of Plutonium and Other Actinides, ICRP Publication 19, International Commission on Radiological Protection, May 1972.

5.4 REFERENCES

1. U.S. Atomic Energy Commission, Toxicity of Power Plant Chemicals to Aquatic Life, WASH-1249, UC-11, Prepared by Battelle Pacific Northwest Laboratories, Richland, Washington 99352, Compiled by Becker, C. D., and Thatcher, T. O., June 1973.

2. Arthur, T. W., and Eaton, T. G., Chloramine Toxicity to the Amphipod (Gammarus Pseudolimnaeus) and the Fathead Minnow (Pimephales promelas), Journal Fisheries Research Board of Canada, Vol 28, No. 12, 1971.

3. Environmental Protection Agency, Regulations on Oil Prevention, 40 CFR, 112, 38FR, 34164, Environmental Reporter, December 11, 1973.

4. Roffman, A., and Roffman, H., Effect of Salt Water Cooling Tower Drift on Water Bodies and Soils, Water, Air and Soil Pollution, Vol 2, 1973, pp 457-471.

5. Slade, D. H., Ed., Meteorology and Atomic Energy 1968, U.S. Atomic Energy Commission, Division of Technical Information, Springfield, Virginia, July 1968, p 392.

6. Aarkrog, A., On the Direct Contamination of Rye, Barley, Wheat and Oats with 85-Sr, 134-Cs, 54 Mn, and 141-Ce, Radiation Botany, Vol 9, Pergamon Press, 1969, pp 357-366.

7. Dix, G. P., and Dobry, T. J., Critical Parameters in Plutonium Safety Evaluations, Health Physics, Vol 22, Pergamon Press, June 1972, pp 569-574.

8. Gilmur, G. T., and Miller, M. S., Fate of Mercuric-Mercurous Chloride Fungicide Added to Turfgrass, Journal of Environmental Quality, Vol 2, No. 1, 1973, pp 145-148.

9. National Academy of Sciences - National Academy of Engineering, National Research Council, Highway Research Board, Effects of Deicing Salts on Water Quality and Biota, Literature Review and Recommended Research, National Cooperative Highway Research Program Report No. 91, 1970.

10. U.S. Public Health Service, Drinking Water Standards, U.S. Department of Health, Education and Welfare, Publication No. 956, 1962.

11. National Technical Advisory Committee, Federal Water Pollution Control Association, Water Quality Criteria, U.S. Government Printing Office, Washington, D. C., 1968.

12. California State Water Quality Control Board, 1963.

13. U.S. Department of Agriculture, Economic Research Service, Major Uses of Land and Water in the United States, Agricultural Economic Report No. 13, Economic Research Service, July 1962.

5.5 REFERENCES

1. Design of Extended Aeration Systems, Tennessee Department of Public Health, February 1972.

2. Design of Supplementary Tertiary Treatment Systems, Tennessee Department of Public Health, April 1972.

3. Letter, Lesesne, E. H., Director of Water Control Planning, TVA, to Van Nort, P. S., General Manager, PMC, May 31, 1974.

4. Environmental Protection Agency Regulations on Secondary Treatment Information, 40 CFR 133, 38 FR 22298, August 17, 1973.

5. Telecon, Van Vleck, L. D., WESD to Knox County Air Pollution Control Department, May 31, 1974.

5.6 REFERENCES

1. IEEE Committee Report, Transmission System Radio Influence, IEEE Transactions on Power Apparatus and Systems, Vol PAS-84/No. 8, August 1965, pp 714-724.

2. Hartley, J. W., Smith R. T., and Dobson, Tennessee Valley Authority's Radio Interference Experiences on 500-kV Transmission Lines, IEEE Transactions on Power Apparatus and Systems, Vol PAS-87/No. 4, April 1968, pp 903-911.

3. Frydman, M., Levy, A., and Miller, S. E., Oxidant Measurements in the Vicinity of Energized 765-kV Lines, presented at 1972 IEEE PES Summer Meeting, San Francisco, California, July 1972.

5.9 REFERENCES

1. CVTR Decommissioning Plan, Amendment 24 to CVNPA License Application July 9, 1959 Docket 50-144, May 1967.

2. Pathfinder Decommissioning Plan, Provisional Operating License, DPR-11, Amendment 50, Docket 50130-7 and 8.

3. Boiling Nuclear Superheater Power Station Decommissioning Final Report, WRA-B-70-500, September 1970.

4. Retirement of the Piqua Nuclear Facility, AI-AEC-12832, April 1970.

5. Report on Retirement of Hallam Nuclear Power Facility, AI-AEC-12709, May 1970.

6. Elk River Reactor Dismantling Plan, Operating Authorization DPRA-3 (55-836), August 27, 1971, Revised October 18, 1971.

7. SEFOR Decommissioning Plan, Docket 50-231, License No. DR-15, March 10, 1972. State of Arkansas Byproduct License, ARK-396 BP-9-74.

8. Fermi I Request for Possession Only License, August 14, 1973, Docket No. 50-16, License No. DPR-9. Possession license issued September 5, 1973.

9. A Preliminary Report on Light Water Reactor Decommissioning Costs, GU-5295.

6.1 REFERENCES

1. Methods for Chemical Analysis of Water and Wastes, Environmental Protection Agency, Cincinnati, Ohio, 1971.

2. Standard Methods for Examination of Water and Wastewater, American Public Health Association, Washington, D. C., 1971.

3. Biological Analysis of Water and Wastewater, AM302, Millipore Corporation, Bedford, Massachusetts, 1972.

4. Water Quality Criteria, Federal Water Pollution Control Administration, U.S. Department of the Interior, Washington, D. C., April 1968.

5. Taylor, C. B., Bacteriology of Fresh Water II; The Distribution and Types of Coliform Bacteria in Lakes and Streams, Journal of Hygiene, Cambridge, Vol 42, pp 17-28. Cited in H. B. Hynes, The Ecology of Running Waters, University of Toronto Press, Toronto, Canada, 1972.

6. Biological Field and Laboratory Methods for Measuring the Quality of Surface Waters and Effluents, EPA National Environmental Research Center, Analytical Quality Control Laboratory, Cincinnati, Ohio, 1973.

7. Pennak, R. W., Collegiate Dictionary of Zoology, Ronald Press Company, New York, 1964.

8. Weber, C. I., and Taschke, R. L., Use of a Floating Periphyton Sampler for Water Pollution Surveillance, Federal Water Pollution Control Administration, Analytical Quality Control Laboratory, Cincinnati, Ohio, 1970.

9. Patrick, R., The Use of Algae in Assessment of Water Quality. Presentation at Environmental Monitoring Symposium of American Society for Testing and Materials, Los Angeles, California, June 27, 1972.

10. Taylor, M. P., Thermal Effects on the Periphyton Community in the Green River 1966, 1968 and 1970, TVA-Division of Environmental Planning, February 1973.

11. Weber, C. I., Recent Development in the Measurement of the Response of Plankton and Periphyton to Changes in Their Environment, Bioassay Techniques and Environmental Chemistry, Ann Arbor Science Publishers, Inc., Copyright 1973.

12. Weber, C. I., and McFarland, B. H., Periphyton Biomass-Chlorophyll Ratio as an Index of Water Quality. Presented at the 175th Annual Meeting, Midwest Benthological Society, Gilbertsville, Kentucky, April 1969.

13. Hester, F., and Dendy, J., A Multiple-Plate Sampler for Aquatic Macroinvertebrates, Trans. Amer. Fish. Soc., Vol 91 (4), 1962, pp 420 and 421.

14. Sinclair, R. M., and Isom, B. G., Further Studies on the Introduced Asiatic Clam (Corbicula) in Tennessee, Tennessee Pollution Control Board, Tennessee Department Public Health, 1963.

15. Jaco, B. D., and Sheddan, T. L., TVA Fish Population Monitoring - LMFBR Demonstration Project, Unpublished Report, January 11, 1974.

16. Carlander, K. D., Handbook of Freshwater Fishery Biology, Vol 1, Iowa State University Press, Ames, Iowa, 1969.

17. Wilhm, J. L., and Dorris, T. C., Biological Parameters for Water Quality Criteria, Bioscience, Vol 18 (6), 1968, pp 477-480.

18. Krebs, C. J., Ecology: The Experimental Analysis of Distribution and Abundance, Harper and Row, Inc., New York, 1972.

19. Patrick, R., The Use of Algae in the Assessment of Water Quality, Environmental Monitoring Symposium of American Society for Testing and Materials, Los Angeles, California, June 27, 1972.

20. Patten, B. C., The Information Concept in Ecology: Some Aspects of Information Gathering Behavior in Plankton, Information Storage and Neutral Control (W. Fields and W. Abbott, eds.), Charles C. Thomas, Publisher, Springfield, Illinois, 1963.

21. Wilhm, J. L., and Dorris, T. C., Species Diversity of Benthic Macroinvertebrates in a Stream Receiving Domestic Oil Refinery Effluents, American Midland Naturalist, Vol 76 (2), 1966, pp 427-449.

22. Poole, R. W., An Introduction to Quantitative Ecology, McGraw-Hill, Inc., New York, 1974.

23. Pielou, E. C., An Introduction to Mathematical Ecology, Wiley-Interscience, New York, 1969.

24. Laboratory Operating Procedures, I-WQ-74-2, February 1974, Tennessee Valley Authority, Division of Environmental Planning, Water Quality Branch.

25. Hosler, C. R., Low-Level Inversion Frequency in the Contiguous United States, Monthly Weather Review, Vol 89, No. 9, September 1971, pp 319-339.

26. Holzworth, G. C., Estimates of Mean Maximum Mixing Depths in the Contiguous United States, Monthly Weather Review, Vol 92, No. 5, May 1964, pp 235-242.

27. Holzworth, G. C., Mixing Heights, Wind Speed and Potential for Urban Air Pollution Throughout the Contiguous United States, Environmental Protection Agency, January 1972.

28. Vaiksnoras, J. V., State Climatologist for Tennessee, Tornado Occurrences in Tennessee, 1916-1970, National Weather Service Office, Nashville, Tennessee, April 15, 1971.

29. Vaiksnoras, J. V., Tornadoes in Tennessee (1916-1970) with Reference to Notable Tornado Disasters in the United States (1880-1970), University of Tennessee, Institute for Public Services, Knoxville, Tennessee, revised October 1972.

30. Thom, H. C. S., Tornado Probabilities, Monthly Weather Review, Vol 91, Nos. 10-12, October-December 1963, pp 730-736.

31. Changnon, S. A., Jr., Examples of Economic Losses from Hail in the United States, Journal of Applied Meteorology, Vol 11, No. 7, 1972, pp 1128-1137.

32. Maximum Recorded United States Point Rainfall for 5 Minutes to 24 Hours at 296 First Order Stations, Technical Paper No. 2, U.S. Department of Commerce, U.S. Weather Bureau, Revised 1963.

33. Glaze - Its Meteorology and Climatology, Geographical Distribution and Economic Effects, Technical Report EP-105, Quartermaster Research and Engineering Command, Natick, Massachusetts, March 1959.

34. Some Devastating North Atlantic Hurricanes of the 20th Century, U.S. Department of Commerce, NOAA/PA 70024, 1971.

35. Draft Environmental Statement Concerning Proposed Rule Making Action, prepared by the Directorate of Regulatory Standards, U.S. Atomic Energy Commission, issued January 1973.

36. Letter, Kornasiewicz, R., Meteorologist, U.S. AEC, to Van Vleck, L., WESD, September 1973.

6.2 REFERENCES

1. Laboratory Operating Procedures, I-WQ-74-2, February 1974, Tennessee Valley Authority Division of Environmental Planning, Water Quality Branch.

2. Federal Water Pollution Control Act Amendments of 1972, Section 402.

3. General Water Quality Criteria for the Definition and Control of Pollution in the Waters of Tennessee, Tennessee Water Quality Control Board.

4. Peters, L. N., Grigal, D. F., Curlin, T. W., and Selvidge, W. L., Chemical, Physical and Morphological Properties of the Soils of Walker Branch Watershed, ORNL-TM-2968, 1971.

5. Soil Survey Manual, U.S. Department of Agriculture, Soil Conservation Service, 1962. (Also called Agricultural Handbook, No. 18).

6.3 REFERENCES

1. Oak Ridge National Laboratory, Environmental Sciences Division Annual Report, ORNL 4935, 1972.

2. U.S. Atomic Energy Commission, Environmental Monitoring Report, UCC-ND-244, 1972.

7.1 REFERENCES

1. AEC Regulatory Guide No. 1.4.

2. Berger, J. J., National Bureau of Standards, Beta-Ray Dose in Tissue-Equivalent Material Immersed in a Radioactive Cloud, Health Physics, January 26, 1974, pp 1-12.

3. Martin, M. J., Radioactive Atoms - Supplement 1, ORNL-4293, November 1973, 33 pages.

4. Lederer, C. M., Hollander, J. M., and Perlman, I., Table of Isotopes, Sixth Edition, John Wiley & Sons, Inc., 1967.

5. International Commission on Radiological Protection, ICRP Publication 10, Report of Committee IV on Evaluation of Radiation Doses to Body Tissue from Internal Contamination Due to Occupational Exposure, Pergamon Press, 1968, pp 29-30.

6. Dolphin, G. W., Fairbairn, A., and Murphy, T., ASHB(RP)R20, Accumulated Dose Received in 13 Weeks and 50 Years by Body Tissues from One Microcurie Single Intake by Inhalation or Injection Through a Wound, United Kingdom Atomic Energy Authority, Risley, Warrington, Lancashire, 1962, Authority Health and Safety Branch.

7. United States Atomic Energy Commission Rules and Regulations Title 10, Part 20, Standards for Protection Against Radiation, December 31, 1968, and Amendments February 5, May 9, November 28, 1970 and November 5, 1973.

8. Bunch, D. F., Dose to Various Body Organs from Inhalation or Ingestion of Soluble Radionuclides, IDO-12054, Health & Safety Division, Idaho Operations Office, U.S. AEC, August 1966.

9. AI-AEC-13055, SOFIRE II User Report, March 1973.

10. AI-AEC-13038, HAA-3 User Report, March 1973.

11. Horton, J. H., Corey, J. C., and Wallace, R. M., Tritium Loss from Water Exposed to Atmosphere, Environmental Science and Technology, Vol 5, 1971, pp 338-343.

12. Specialist's Meeting on Sodium-Water Reactions, May 18-21, 1971, Nelekress, USSR, Conf. 710548.

13. AI-AEC-13113, Quarterly Technical Progress Report, Sodium Technology and Cover Gas Seal Development Program, July-September 1973.

7.2 REFERENCES

1. Sax, N., Dangerous Properties of Industrial Materials, Third Edition, Reinhold Books Corporation, New York, 1968.

2. Summary Report, Meeting of Specialists on Sodium Combustion and Its Extinguishment: Techniques and Technology, USAEC Report TID-26076, Richland, Washington, May 22-25, 1972.

3. Broadley, D., Secondary Sodium Circuit Integrity and Fire Fighting Procedures for the UKAEA Prototype Fast Reactor, USAEC Report TID-26076, Richland, Washington, May 22-25, 1972.

4. USAEC Regulatory Guide 1.78, Assumptions for Evaluating the Habitability of a Nuclear Power Plant Control Room During a Postulated Hazardous Chemical Release, June 1974.

5. Code of Federal Regulations, Title 29, Labor, Chapter XVII, Occupational Safety and Health Admin., Subpart G., Section 1910.93, July 1, 1973.

8.1 REFERENCES

1. Open-Space Land and Recreation Plan, prepared by Alfred N. Raby Partnership for the City of Oak Ridge, Tennessee, June 1973, pp 7, 8 and 10.

2. Population and Economy: Oak Ridge, Tennessee, Eric Hill Associates, Inc., June 1969, pp 1 and 74.

3. Population Projections for the Tennessee Valley Region, by County by Decade to 2020, Tennessee Valley Authority, Division of Navigation Development and Regional Studies, Economic Research Staff, October 1972.

4. Atomic Energy Commission news release, Oak Ridger, May 10, 1973.

5. Knoxville Metropolitan Area Land Use Plan, East Tennessee Development District, June 1972, p 48.

6. Atomic Energy Commission news release, Anderson County Times, May 11, 1973.

7. Personal interview, Nelson J., Planner, Planning Department, Oak Ridge, Tennessee, April 22, 1974.

8. Letter, DeVeny, G., TVA, Knoxville, Tennessee, to Travis, R. K., WESD, November 1973.

9. Letter, DeVeny, G., TVA, Knoxville, Tennessee, to Travis, R. K., WESD, December 11, 1973.

10. Letter, Nelson, J., Planner, Planning Department, Oak Ridge, Tennessee, to Travis, R. K., WESD, November 27, 1973.

8.2 REFERENCES

1. Environmental Statement for the Bellefonte Nuclear Plant, Vol I, Tennessee Valley Authority draft.

2. Letter, Van Nort, P. S., Project Management Corporation, to Herr, H. F., WESD, February 11, 1974.

3. Nathan, R. R., Inc., Recreation as an Industry, Appalachian Regional Commission, Washington, D. C., 1966.

4. What New Jobs Mean to a Community, Research Study Prepared by Economic Analysis and Study, Chamber of Commerce of the United States, Washington, D. C., 1973, p 7.

8.3 REFERENCES

1. What New Jobs Mean to a Community, Research Study prepared by Economic Analysis and Study, Chamber of Commerce of the United States, Washington, D. C., 1973.

2. Draft Environmental Statement, Liquid Metal Fast Breeder Reactor Program, U.S. Atomic Energy Commission, WASH-1535, March 1974.

3. Personal Interview, Nelson, J., Planner, Oak Ridge Planning Commission, Oak Ridge, Tennessee, April 22, 1974.

4. Letter, DeVeny G., TVA, Knoxville, Tennessee, to Travis, R. K., WESD, December 4, 1973.

5. Personal Interview, Arbuckle, W., Exxon Representative, Loudon, Tennessee, April 24, 1974.

6. Personal Interview, Peitzsch, F., Community Specialist, Atomic Energy Commission, Oak Ridge, Tennessee, April 22, 1974.

7. Personal Interview, DeVeny, G., Regional Planning Staff, TVA, Knoxville, Tennessee, April 23, 1974.

8. Personal Interview, Yott, W., Manager, Ballew Trailer Park, Oak Ridge (area), Tennessee, April 22, 1974.

9. Personal Interview, Bowen, R., Roane County School Official, Kingston, Tennessee, April 22, 1974.

9.1 REFERENCES

1. Liquid Metal Fast Breeder Reactor Program Environmental Statement, United States Atomic Energy Commission, WASH-1535, March 1974.

2. LMFBR Demonstration Plant Program Proceedings of Senior Utility Steering Committee and Senior Utility Technical Advisory Panel for the Period April 1971 through January 1972, WASH-1201, May 1971.

3. Hubbert, M. K., Energy Resources for Power Production, Environmental Aspects of Nuclear Power Stations, Proceedings of a Symposium, International Atomic Energy Agency, August 10-14, 1970.

4. Hubbert, M. K., Resources and Man, A Study and recommendations by the Committee on Resources and Man, National Academy of Sciences, National Research Council, W. K. Freeman & Co., San Francisco, 1969, pp 157-242.

9.2 REFERENCES

1. U.S. Atomic Energy Commission, Invitation for Proposals, Fourth Round, The LMFBR Demonstration Plant Program Under the Commission's Power Reactor Demonstration Program, May 1969.

2. LMFBR Demonstration Plant Program Proceedings of Senior Utility Steering Committee and Senior Utility Technical Advisory Panel for the Period April 1971 Through January 1972, WASH-1201, May 1971.

3. Liquid Metal Fast Breeder Reactor Program Environmental Statement, United States Atomic Energy Commission, WASH-1535, March 1974.

4. Stearns, R. G., and Wilson, C. W., Jr., Relationship of Earthquakes and Geology in West Tennessee and Adjacent Area, Tennessee Valley Authority, Special Report, 1972.

5. LMFBR Demonstration Plant Report of Technical Committee on Alternative Hook-On Arrangements, February 1972.

6. AEC Report on Sodium Reheat for LMFBR Demonstration Plant, Preliminary Draft, June 1972.

7. Status of LMFBR Reheat in Western Europe - 1972, WASH-1219, March 1973.

8. LMFBR Clinch River Site - Combined Cycle Hook-On, Draft, Undated.

9. Siting Report for the Liquid Metal Fast Breeder Reactor Demonstration Plant, Tennessee Valley Authority, August 2, 1972.

10. Preliminary Information on the John Sevier Site as a Possible Location for an LMFBR Demonstration Plant, March 1972.

11. Kellberg, J. M., and Benziger, C. P., Preliminary Geologic Investigations for the John Sevier Steam Plant, September 1952.

12. Preliminary Information on the Widows Creek Site as a Possible Location for an LMFBR Demonstration Plant, Draft, March 1972.

13. Kellberg, J. M., and Benziger, C. P., Preliminary Geologic Investigations for the Central Area Steam Plant, November 1949.

14. Kellberg, J. M., Foundation Exploration for Unit 7 Widows Creek Steam Plant, February 1958.

15. Kellberg, J. M., and Benziger, C. P., Geology of the Widows Creek Steam Plant Site, April 1950.

16. Preliminary Information on the Clinch River Site as a Possible Location for LMFBR Demonstration Plant, August 1972.

17. Letter, Bell, C., Assistant to the Director of Water Control Planning, TVA, to Keaton, D., Assistant Project Manager, PMC, July 25, 1973.

18. LMFBR Hook-On Considerations at John Sevier and Widows Creek, (Preliminary), April 1972.

19. LMFBR Demonstration Plant Proposal for Project Management Corporation, Westinghouse Electric Corporation, April 1972.

20. Liquid Metal Fast Breeder Reactor Demonstration Plant Program Proposal to Project Management Corporation, Atomics International, North American Rockwell, April 20, 1972.

21. A Proposal for the LMFBR Demonstration Plant Program, General Electric, April 21, 1972.

10.1 REFERENCES

1. Proposed Effluent Limitations Guidelines and Standards for the Steam Electric Power Generating Point Source Category, EPA, Federal Register, Vol 39, No. 43, Part 3, March 4, 1974.

2. National Academy of Engineering, Committee on Power Plant Siting, Engineering for Resolution of the Energy-Environment Dilemma, Washington, D. C., 1972, p 147.

3. Leung, P., and Moore, R. E., Thermal Cycle Arrangements for Power Plants Employing Dry Cooling Towers, ASME paper 70-PWR-6.

4. McMaster, W. M., Hydrologic Data for the Oak Ridge Area Tennessee, Geological Survey Water-Supply Paper 1839-N.

10.2 REFERENCES

1. Responses to Letters of Inquiry, Burns and Roe, Inc., to: Detroit Steel Corporation Plant, Portsmouth, Ohio; Armco Steel Corporation Plant, Ashland, Kentucky; City of Ironton Water Supply, Ironton, Ohio; Wyandotte Chemical Company Plant, Wyandotte, Michigan; Westvaco Corporation Plant, New York, New York.

2. Bibko, P. N., Wirtenan, L., and Kueser, P. E., Preliminary Effects of Air Bubble Screens and Intense Illumination on the Swimming Behavior of the Striped Bass (Morone saxitalis) and the Gizzard Shad (Dorosoma cepedianum), presented at the Third Annual Symposium on Entrainment and Entrapment Effects, John Hopkins University, Baltimore, Maryland, March 1972.

3. Report Hanford Nuclear Project No. 2, Air and Hydraulic Model Studies of the Perforated Pipe Inlet and Protection Dolphin, LHL-599, LaSalle Hydraulic Laboratories, Montreal, February 1974.

4. Steam Electric Power Plants, Development Document for Effluent Limitation Guidelines and Standards of Performance, Draft Contractor's Report, prepared by Burns and Roe, Inc., for the EPA, Contract No. 68-01-1512, June 1973.

5. TVA Fish Population Monitoring Program -- LMFBR Demonstration Project, January 11, 1974.

6. Letter, Allen, E. C., Fishery Reporting Specialist, National Marine Fisheries Service, to Colick, J., WESD, March 1, 1974.

7. Report Roseton Generating Station, Hydraulic Model of Intake, LHL-526, LaSalle Hydraulic Laboratory, Montreal, October 1970.

10.4 REFERENCES

1. Water Pollution: Domestic Wastes, A Technological Assessment Methodology, prepared by the Mitre Corporation for the Office of Science and Technology, June 1971.

2. General Water Quality Criteria for the Definition and Control of Pollution in the Waters of Tennessee, Tennessee Water Quality Control Board, Amended December 14, 1971.

10.5 REFERENCES

1. Becker, C. D., and Thatcher, T. O., Toxicity of Power Plant Chemical to Aquatic Life, prepared by U.S. AEC, WASH-1249, June 1973.

2. Zillich, J. A., Toxicity of Combined Chlorine Residuals to Fresh Water Fish, Journal of the Water Pollution Control Federation, Vol 44, February 1972.

3. Biological Control in Cooling Systems, New Developments and Pollution Considerations, presented by Walko, J. F., et al, Betz Laboratories, at the 32nd Annual Meeting, Engineer's Society of Western Pennsylvania International Water Conference, 1971.

4. Diaper, E. W. J., Disinfection of Water and Wastewater Using Ozone, paper presented before the Division of Environmental Chemistry, American Chemical Society, Chicago, 1973.

5. Rosen, H. M., et al, Economic Wastewater Disinfection With Ozone, paper presented before the Division of Environmental Chemistry, American Chemical Society, Chicago, 1973.

6. Sinclair, R. M., and Isom, B. G., Further Studies on the Introduced Asiatic Clam (Corbicula) in Tennessee, Tennessee Stream Pollution Control Board, Tennessee Department of Public Health, November 1963.

7. Arther, J. W., and Eaton, J. G., Chloramine Toxicity to the Amphipod Gammarus pseudoliminaeus and the Fathead Minnow (Pimephales promelas), Journal of the Fisheries Research Board of Canada, Vol 28, 1971.

10.6 REFERENCES

1. Letter, Unger, R. A., Environmental Engineer, Division of Water Quality Control, State of Tennessee, Department of Public Health to Young, W. H., CRBRP Project Manager, Burns and Roe, Inc., January 21, 1974.

2. Water Pollution: Domestic Wastes, A Technological Assessment Methodology, prepared by the Mitre Corporation for the Office of Science and Technology, June 1971.

3. Cost of Wastewater Treatment Processes, prepared by Dorr-Oliver, Inc. for the Federal Water Pollution Control Federation, Cincinnati, Ohio, December 1968.

4. Porges, R., et al, Sewage Treatment by Extended Aeration, Water Pollution Control Federation Journal, Vol 33, December 1961.

5. Baker, R. H., Package Aeration Plants in Florida, Journal of the Sanitary Engineering Division, ASCE, November 1962.

6. Standard Methods for the Examination of Water and Wastewater, 13th Edition, American Public Health Association.

7. Smith, R., A Compilation of Cost Information for Conventional and Advanced Wastewater Treatment Plant and Processes, National Technical Information Service, Cincinnati, Ohio, December 1967.

8. Environmental Protection Agency Regulations on Secondary Treatment Information, 40 CFR 133, 38 FR 22298, August 17, 1973.

10.7 REFERENCES

1. Cleaning and Cleanliness Requirements for Nuclear Components, RDT Standard F5-IT, United States Atomic Energy Commission, February 1972.

2. Concluding Statement of the Regulatory Staff, ALAP LWR Effluents, Docket No. RM-50-2, February 20, 1974.

10.8 REFERENCES

1. Kayser, G., Problems Due to Fission Products in Circuits of Sodium Cooled Fast Reactors in Event of Can Fractures, EURFMR-593, December 1972.

2. Fast Flux Test Facility, System Design Description, No. 82, 1974.

10.9 REFERENCES

1. Soil Survey, Roane County, Tennessee, U.S. Department of Agriculture, Bureau of Plant Industry, May 1942.

2. Tennessee Valley Authority, CRBRP Site Soils, Enclosure 1 in letter from Williams, G., TVA to Van Nort, P. S., PMC, July 19, 1974, 22 pages.

11.1 REFERENCES

1. Atomic Energy Commission, Regulatory Guide No. 4.2.

2. Draft Environmental Statement, Liquid Metal Fast Breeder Reactor Program, U.S. Atomic Energy Commission, WASH-1535, March 1974.

3. The Preliminary Estimation and Evaluation of Environmental Effects of Design Alternatives for the Clinch River Breeder Reactor Plant (CRBRP), report to Burns & Roe, Inc., by Westinghouse Environmental Systems Department, February 22, 1974.

11.2 REFERENCES

1. Draft Environmental Statement, Liquid Metal Fast Breeder Reactor Program, U.S. Atomic Energy Commission, WASH-1535, March 1974.

11.5 REFERENCES

1. Draft Environmental Statement, Liquid Metal Fast Breeder Reactor Program, U.S. Atomic Energy Commission, WASH-1535, March 1974.

TABLE OF CONTENTS

APPENDICES

		Page
14.1	Appendix to Section 2.5	14.1-1
14.2	Appendix to Section 2.6 (INCORPORATED INTO REVISED SECTION 2.6)	
14.3	Appendix to Section 2.7	14.3-1
14.4	Appendix to Sections 5.2 and 5.3	14.4-1
14.5	Appendix to Section 10.1	14.5-1
14.6	Appendix to Section 10.3	14.6-1
14.7	References	14.7-1

14.1 APPENDIX TO SECTION 2.5

APPENDIX TO SECTION 2.5

GENERAL WATER QUALITY CRITERIA FOR THE DEFINITION AND CONTROL OF POLLUTION IN THE WATERS OF TENNESSEE

Adopted on October 26, 1971
Amended on December 14, 1971, and October 30, 1973

Tennessee Water Quality Control Board

The Water Quality Control Act of 1971, Section 70-324 thru Section 70-342, Tennessee Code Annotated, makes it the duty of the Water Quality Control Board to study and investigate all problems concerned with the pollution of the waters of the State and with its prevention, abatement, and control and to establish such standards of quality for any waters of the State in relation to their reasonable and necessary use as the Board shall deem to be in the public interest and establish general policies relating to existing or proposed future pollution as the Board shall deem necessary to accomplish the purpose of the Control Act. The following general considerations and criteria are officially adopted by the Board as a guide in determining the permissible conditions of waters with respect to pollution and the preventive or corrective measures required to control pollution in various waters or in different sections of the same waters.

GENERAL CONSIDERATIONS

1. Waters have many uses which in the public interest are reasonable and necessary. Such uses include: sources of water supply for domestic and industrial purposes; propagation and maintenance of fish and other desirable aquatic life; recreational boating and fishing; the final disposal of municipal sewage and industrial waste following adequate treatment; stock watering and irrigation; navigation; generation of power; and the enjoyment of scenic and esthetic qualities of the waters.

2. The rigid application of uniform water quality is not desirable or reasonable because of the varying uses of such waters. The assimilative capacity of a stream for sewage and waste varies depending upon various factors including the following: volume of flow, depth of channel, the presence of falls or rapids, rate of flow, temperature, natural characteristics, and the nature of the stream. Also the relative importance assigned to each use will differ for different waters and sections of waters throughout the stream.

3. To permit reasonable and necessary uses of the waters of the State, existing pollution should be corrected as rapidly as practical and future pollution controlled by treatment plants or other measures. There is an economical balance between the cost of sewage and waste treatment and the benefits received. Within permissible limits, the dilution factor and the assimilative capacity of surface water should be utilized. Waste recovery, control of rates and dispersion of waste into the streams, and control of rates and characteristics of flow of waters in the stream where adequate, will be considered to be a means of correction.

4. Sewage, industrial wastes, or other wastes, as defined in The Water Quality Control Act of 1971, Section 70-324 thru Section 70-342, Tenneseee Code Annotated, shall not be discharged into or adjacent to streams or other surface waters in such quantity and of such character or under such conditions of discharge in relation to the receiving waters as will result in visual or olfactory nuisances, undue interference to other reasonable and necessary uses of the water, or appreciable damage to the natural processes of self-purification. In relation to the various qualities and the specific uses of the receiving waters, no sewage, industrial wastes, or other wastes discharged shall be responsible for conditions that fail to meet the criteria of water quality outlined below. Bypassing or accidental spills will not be tolerated.

   The criteria of water quality outlined below are considered as guides in applying the water quality objectives in order to insure reasonable and necessary uses of the waters of the State. In order to protect the public health and maintain the water suitable for other reasonable and necessary uses; to provide for future development; to allow proper sharing of available water resources; and to meet the needs of particular situations, additional criteria will be set.

CRITERIA OF WATER CONDITIONS

1. Domestic Raw Water Supply

   (a) Dissolved Oxygen - There shall always be sufficient dissolved oxygen present to prevent odors of decomposition and other offensive conditions.

   (b) pH - The pH value shall lie within the range of 6.0 to 9.0 and shall not fluctuate more than 1.0 unit in this range over a period of 24 hours.

(c) Hardness or Mineral Compounds - There shall be no substances added to the waters that will increase the hardness or mineral content of the waters to such an extent to appreciably impair the usefulness of the water as a source of domestic water supply.

(d) Total Dissolved Solids - The total dissolved solids shall at no time exceed 500 mg/l.

(e) Solids, Floating Materials and Deposits - There shall be no distinctly visible solids, scum, foam, oily sleek, or the formation of slimes, bottom deposits or sludge banks of such size or character as may impair the usefulness of the water as a source of domestic water supply.

(f) Turbidity or Color - There shall be no turbidity or color added in amounts or characteristics that can not be reduced to acceptable concentrations by conventional water treatment processes.

(g) Temperature - The maximum water temperature change shall not exceed 3C° relative to an upstream control point. The temperature of the water shall not exceed 30.5°C and the maximum rate of change shall not exceed 2C° per hour. The temperature of impoundments where stratification occurs will be measured at a depth of 5 feet, or mid-depth whichever is less, and the temperature in flowing streams shall be measured at mid-depth.

(h) Coliform - The concentration of the fecal coliform group shall not exceed 1,000 per 100 ml. as the logarithmic mean based on a minimum of 10 samples collected from a given sampling site over a period of not more than 30 consecutive days with individual samples being collected at intervals of not less than 12 hours. In addition, the concentration of the fecal coliform group in any individual sample shall not exceed 5,000 per 100 ml.

(i) Taste or Odor - There shall be no substances added which will result in taste or odor that prevent the production of potable water by conventional water treatment processes.

(j) Toxic Substances - There shall be no toxic substances added to the waters that will produce toxic conditions that materially affect man or animals or impair the safety of a conventionally treated water supply.

(k) Other Pollutants - Other pollutants shall not be added to the water in quantities that may be detrimental to public health or impair the usefulness of the water as a source of domestic water supply.

2. Industrial Water Supply

(a) Dissolved Oxygen - There shall always be sufficient dissolved oxygen present to prevent odors of decomposition and other offensive conditions.

(b) pH - The pH value shall lie within the range of 6.0 to 9.0 and shall not fluctuate more than 1.0 unit in this range over a period of 24 hours.

(c) Hardness or Mineral Compounds - There shall be no substances added to the waters that will increase the hardness or mineral content of the waters to such an extent as to appreciably impair the usefulness of the water as a source of industrial water supply.

(d) Total Dissolved Solids - The total dissolved solids shall at no time exceed 500 mg/l.

(e) Solids, Floating Materials and Deposits - There shall be no distinctly visible solids, scum, foam, oily sleek, or the formation of slimes, bottom deposits or sludge banks of such size or character as may impair the usefulness of the water as a source of industrial water supply.

(f) Turbidity or Color - There shall be no turbidity or color added in amounts or characteristics that can not be reduced to acceptable concentrations by conventional water treatment processes.

(g) Temperature - The maximum water temperature change shall not exceed 3C° relative to an upstream control point. The temperature of the water shall not exceed 30.5°C and the maximum rate of change shall not exceed 2C° per hour. The temperature of impoundments where stratification occurs will be measured at a depth of 5 feet, or mid-depth whichever is less, and the temperature in flowing streams shall be measured at mid-depth.

(h) Taste or Odor - There shall be no substances added that will result in tastes or odor that would prevent the use of the water for industrial processing.

(i) Toxic Substances - There shall be no substances added to the waters that may produce toxic conditions that will adversely affect the water for industrial processing.

(j) Other Pollutants - Other pollutants shall not be added to the waters in quantities that may adversely affect the water for industrial processing.

3. Fish and Aquatic Life.

(a) Dissolved Oxygen - The dissolved oxygen shall be a minimum of 5.0 mg/l except in limited sections of streams where (i) present technology cannot restore the water quality to the desired minimum of 5.0 mg/l dissolved oxygen, (ii) the cost of meeting the standards is economically prohibitive when compared with the expected benefits to be obtained, or (iii) the natural qualities of the water are less than the desired minimum of 5.0 mg/l. Such exceptions shall be determined on an individual basis but in no instance shall the dissolved oxygen concentration be less than 3.0 mg/l. The dissolved oxygen concentration shall be measured at mid-depth in waters having a total depth of ten (10) feet or less and at a depth of five (5) feet in waters having a total depth of greater than ten (10) feet. The dissolved oxygen concentration of recognized trout streams shall not be less than 6.0 mg/l.

(b) pH - The pH value shall lie within the range of 6.5 to 8.5 and shall not fluctuate more than 1.0 unit in this range over a period of 24 hours.

(c) Solids, Floating Materials and Deposits - There shall be no distinctly visible solids, scum, foam, oily sleek, or the formation of slimes, bottom deposits or sludge banks of such size or character that may be detrimental to fish and aquatic life.

(d) Turbidity or Color - There shall be no turbidity or color added in such amounts or of such character that will materially affect fish and aquatic life.

(e) Temperature - The maximum water temperature change shall not exceed 3C° relative to an upstream control point. The temperature of the water shall not exceed 30.5°C and the maximum rate of change shall not exceed 2C° per hour. The temperature of recognized trout waters shall not exceed 20°C. There shall be no abnormal temperature changes that may affect aquatic life unless caused by natural conditions. The temperature of impoundments where stratification occurs will be measured at a depth of 5 feet, or mid-depth whichever is less, and the temperature in flowing streams shall be measured at mid-depth.

(f) Taste or Odor - There shall be no substances added that will impart unpalatable flavor to fish or result in noticeable offensive odors in the vicinity of the water or otherwise interfere with fish or aquatic life.

(g) Toxic Substances - There shall be no substances added to the waters that will produce toxic conditions that affect fish or aquatic life.

(h) Other Pollutants - Other pollutants shall not be added to the waters that will be detrimental to fish or aquatic life.

(i) Coliform - The concentration of the fecal coliform group shall not exceed 1,000 per 100 ml. as the logarithmic mean based on a minimum of 10 samples collected from a given sampling site over a period of not more than 30 consecutive days with individual samples being collected at intervals or not less than 12 hours. In addition, the concentration of the fecal coliform group in any individual sample shall not exceed 5,000 per 100 ml.

4. Recreation.

(a) Dissolved Oxygen - There shall always be sufficient dissolved oxygen present to prevent odors of decomposition and other offensive conditions.

(b) pH - The pH value shall lie within the range of 6.0 to 9.0 and shall not fluctuate more than 1.0 unit in this range over a period of 24 hours.

(c) Solids, Floating Materials and Deposits - There shall be no distinctly visible solids, scum, foam, oily sleek, or the formation of slimes, bottom deposits or sludge banks of such size or character that may be detrimental to recreation.

(d) Turbidity or Color - There shall be no turbidity or color added in such amounts or character that will result in any objectionable appearance to the water.

(e) Temperature - The maximum water temperature change shall not exceed 3C° relative to an upstream control point. The temperature of the water shall not exceed 30.5°C and the maximum rate of change shall not exceed 2C° per hour. The temperature of impoundments where stratification occurs will be measured at a depth of 5 feet, or mid-depth whichever is less, and the temperature in flowing streams shall be measured at mid-depth.

(f) Coliform - The concentration of the fecal coliform group shall not exceed 200 per 100 ml. as the logarithmic mean based on a minimum of 10 samples collected from a given sampling site over a period of not more than 30 consecutive days with individual samples being collected at intervals of not less than 12 hours. In addition, the concentration of the fecal coliform group in any individual sample shall not exceed 1,000 per 100 ml. Water areas in the vicinity of domestic wastewater treatment plant outfalls are not considered suitable for body contact recreational purposes.

(g) Taste or Odor - There shall be no substances added that will result in objectionable taste or odor.

(h) Toxic Substances - There shall be no substances added to the water that will produce toxic conditions that affect man or animal.

(i) Other Pollutants - Other pollutants shall not be added to the water in quantities which may have a detrimental effect on recreation.

5. Irrigation.

(a) Dissolved Oxygen - There shall always be sufficient dissolved oxygen present to prevent odors of decomposition and other offensive conditions.

(b) pH - The pH value shall lie within the range of 6.0 to 9.0 and shall not fluctuate more than 1.0 unit in this range over a period of 24 hours.

(c) Hardness or Mineral Compounds - There shall be no substances added to the water that will increase the mineral content to such an extent as to impair its use for irrigation.

(d) Solids, Floating Materials and Deposits - There shall be no distinctly visible solids, scum, foam, oily sleek, or the formation of slimes, bottom deposits or sludge banks of such size or character as may impair the usefulness of the water for irrigation purposes.

(e) Temperature - The temperature of the water shall not be raised or lowered to such an extent as to interfere with its use for irrigation purposes.

(f) Toxic Substances - There shall be no substances added to water that will produce toxic conditions that will affect the water for irrigation.

(g) Other Pollutants - Other pollutants shall not be added to the water in quantities which may be detrimental to the waters used for irrigation.

6. Livestock Watering and Wildlife.

(a) Dissolved Oxygen - There shall always be sufficient dissolved oxygen present to prevent odors of decomposition and other offensive conditions.

(b) pH - The pH value shall lie within the range of 6.0 to 9.0 and shall not fluctuate more than 1.0 unit in this range over a period of 24 hours.

(c) Hardness or Mineral Compounds - There shall be no substances added to water that will increase the mineral content to such an extent as to impair its use for livestock watering and wildlife.

(d) Solids, Floating Materials and Deposits - There shall be no distinctly visible solids, scum, foam, oily sleek, or the formation of slimes, bottom deposits or sludge banks of such size or character as to interfere with livestock watering and wildlife.

(e) Temperature - The temperature of the water shall not be raised or lowered to such an extent as to interfere with its use for livestock watering and wildlife.

(f) Toxic Substances - There shall be no substances added to water that will produce toxic conditions that will affect the water for livestock watering and wildlife.

(g) Other Pollutants - Other pollutants shall not be added to the water in quantities which may be detrimental to the water for livestock watering and wildlife.

7. Navigation.

(a) Dissolved Oxygen - There shall always be sufficient dissolved oxyten present to prevent odors of decomposition and other offensive conditions.

(b) Hardness or Mineral Compounds - There shall be no substances added to the water that will increase the mineral content to such an extent as to impair its use for navigation.

(c) Solids, Floating Materials and Deposits - There shall be no distinctly visible solids, scum, foam, oily sleek, or the formation of slimes, bottom deposits or sludge banks of such size or character as to interfere with navigation.

(d) Temperature - The temperature of the water shall not be raised or lowered to such an extent as to interfere with its use for navigation purposes.

(e) Toxic Substances - There shall be no substances added to water that will produce toxic conditions that will affect the water for navigation.

(f) Other Pollutants - Other pollutants shall not be added to the water in quantities which may be detrimental to the waters used for navigation.

These criteria should not be construed as permitting the degradation of higher quality water when such can be prevented by reasonable pollution control measured. The above conditions are recognized as applying to waters affected by the discharge of sewage and/or industrial waste or other waste and not resulting from natural causes.

DEFINITIONS

1. Conventional Water Treatment - Conventional water treatment as referred to in the criteria denotes coagulation, sedimentation, filtration and chlorination.

2. Mixing Zone - Mixing zone refers to that section of flowing stream or impounded waters necessary for effluent to become dispersed.

   The mixing zone necessary in each particular case shall be defined by the Tennessee Water Quality Control Board.

INTERPRETATION OF CRITERIA

1. Interpretation of the above criteria shall conform to any rules and regulations or policies adopted by the Water Quality Control Board.

2. Insofar as practicable, the effect of treated sewage or waste discharges on the receiving waters shall be considered after they are mixed with the waters and beyond a reasonable zone of immediate effect upon the qualities of the waters. The extent to which this is practicable depends upon local conditions and the proximity and nature of other uses of the waters.

3. The technical and economical feasibility of waste treatment, recovery, or adjustment of the method of discharge to provide correction shall be considered in determining the time to be allowed for the development of practicable methods and for the specified correction.

4. The criteria set forth shall be applied on the basis of the following stream flows: unregulated streams - stream flows equal to or exceeding the 3-day minimum, 20-year recurrence interval; regulated streams - instantaneous minimum flow.

5. In general, deviations from normal water conditions may be undesirable, but the rate and extent of the deviations should be considered in interpreting the above criteria.

6. The criteria and standards provide that all discharges of sewage, industrial waste, and other wastes will receive the best practicable treatment (secondary or the equivalent) or control according to the policy and procedure of the Tennessee Water Quality Control Board. A degree of treatment greater than secondary when necessary to protect the water uses will be required for selected sewage and waste discharges.

TENNESSEE ANTIDEGRADATION STATEMENT

1. The Standards and Plan adopted are designed to provide for the protection of existing water quality and/or the upgrading or "enhancement" of water quality in all waters within Tennessee. It is recognized that some waters may have existing quality better than established standards.

2. The Criteria and Standards shall not be construed as permitting the degradation of these higher quality waters when such can be prevented by reasonable pollution control measures. In this regard, existing high quality water will be maintained unless and until it is affirmatively demonstrated to the Tennessee Water Quality Control Board that a change is justifiable as a result of necessary social and economic development.

3. All discharges of sewage, industrial waste, or other waste shall receive the best practicable treatment (secondary or the equivalent) or control according to the policy and procedure of the Tennessee Water Quality Control Board. A degree of treatment greater than secondary when necessary to protect the water uses will be required for selected sewage and waste discharges.

4. In implementing the provisions of the above as they relate to interstate streams, the Tennessee Water Quality Control Board will cooperate with the appropriate Federal Agency in order to assist in carrying out responsibilities under the Federal Water Pollution Control Act, as amended.

Public Law 92-500
92nd Congress, S. 2770
October 18, 1972

An Act

86 STAT. 816

To amend the Federal Water Pollution Control Act.

Be it enacted by the Senate and House of Representatives of the United States of America in Congress assembled, That this Act may be cited as the "Federal Water Pollution Control Act Amendments of 1972".

Federal Water Pollution Control Act Amendments of 1972. 70 Stat. 498; 84 Stat. 91. 33 USC 1151 note.

SEC. 2. The Federal Water Pollution Control Act is amended to read as follows:

"TITLE I—RESEARCH AND RELATED PROGRAMS

"DECLARATION OF GOALS AND POLICY

"SEC. 101. (a) The objective of this Act is to restore and maintain the chemical, physical, and biological integrity of the Nation's waters. In order to achieve this objective it is hereby declared that, consistent with the provisions of this Act—

"(1) it is the national goal that the discharge of pollutants into the navigable waters be eliminated by 1985;

"(2) it is the national goal that wherever attainable, an interim goal of water quality which provides for the protection and propagation of fish, shellfish, and wildlife and provides for recreation in and on the water be achieved by July 1, 1983;

"(3) it is the national policy that the discharge of toxic pollutants in toxic amounts be prohibited;

"(4) it is the national policy that Federal financial assistance be provided to construct publicly owned waste treatment works;

"(5) it is the national policy that areawide waste treatment management planning processes be developed and implemented to assure adequate control of sources of pollutants in each State; and

"(6) it is the national policy that a major research and demonstration effort be made to develop technology necessary to eliminate the discharge of pollutants into the navigable waters, waters of the contiguous zone, and the oceans.

"(b) It is the policy of the Congress to recognize, preserve, and protect the primary responsibilities and rights of States to prevent, reduce, and eliminate pollution, to plan the development and use (including restoration, preservation, and enhancement) of land and water resources, and to consult with the Administrator in the exercise of his authority under this Act. It is further the policy of the Congress to support and aid research relating to the prevention, reduction, and elimination of pollution, and to provide Federal technical services and financial aid to State and interstate agencies and municipalities in connection with the prevention, reduction, and elimination of pollution.

"(c) It is further the policy of Congress that the President, acting through the Secretary of State and such national and international organizations as he determines appropriate, shall take such action as may be necessary to insure that to the fullest extent possible all foreign countries shall take meaningful action for the prevention, reduction, and elimination of pollution in their waters and in international waters and for the achievement of goals regarding the elimination of discharge of pollutants and the improvement of water quality to at least the same extent as the United States does under its laws.

"(d) Except as otherwise expressly provided in this Act, the Administrator of the Environmental Protection Agency (hereinafter in this Act called 'Administrator') shall administer this Act. Administration.

WESTINGHOUSE ELECTRIC CORPORATION
PROPERTY OF ENVIRONMENTAL SYSTEMS DEPARTMENT
NO.....

"TITLE III—STANDARDS AND ENFORCEMENT

"EFFLUENT LIMITATIONS

"SEC. 301. (a) Except as in compliance with this section and sections 302, 306, 307, 318, 402, and 404 of this Act, the discharge of any pollutant by any person shall be unlawful.

"(b) In order to carry out the objective of this Act there shall be achieved—

"(1)(A) not later than July 1, 1977, effluent limitations for point sources, other than publicly owned treatment works, (i) which shall require the application of the best practicable control technology currently available as defined by the Administrator pursuant to section 304(b) of this Act, or (ii) in the case of a discharge into a publicly owned treatment works which meets the requirements of subparagraph (B) of this paragraph, which shall require compliance with any applicable pretreatment requirements and any requirements under section 307 of this Act; and

"(B) for publicly owned treatment works in existence on July 1, 1977, or approved pursuant to section 203 of this Act prior to June 30, 1974 (for which construction must be completed within four years of approval), effluent limitations based upon secondary treatment as defined by the Administrator pursuant to section 304(d)(1) of this Act; or,

"(C) not later than July 1, 1977, any more stringent limitation, including those necessary to meet water quality standards, treatment standards, or schedules of compliance, established pursuant to any State law or regulations (under authority preserved by section 510) or any other Federal law or regulation, or required to implement any applicable water quality standard established pursuant to this Act.

"(2)(A) not later than July 1, 1983, effluent limitations for categories and classes of point sources, other than publicly owned treatment works, which (i) shall require application of the best available technology economically achievable for such category or class, which will result in reasonable further progress toward the national goal of eliminating the discharge of all pollutants, as determined in accordance with regulations issued by the Administrator pursuant to section 304(b)(2) of this Act, which such effluent limitations shall require the elimination of discharges of all pollutants if the Administrator finds, on the basis of information available to him (including information developed pursuant to section 315), that such elimination is technologically and economically achievable for a category or class of point sources as determined in accordance with regulations issued by the Administrator pursuant to section 304(b)(2) of this Act, or (ii) in the case of the introduction of a pollutant into a publicly owned treatment works which meets the requirements of subparagraph (B) of this paragraph, shall require compliance with any applicable pretreatment requirements and any other requirement under section 307 of this Act; and

"(B) not later than July 1, 1983, compliance by all publicly owned treatment works with the requirements set forth in section 201(g)(2)(A) of this Act.

"(c) The Administrator may modify the requirements of subsection (b)(2)(A) of this section with respect to any point source for which a permit application is filed after July 1, 1977, upon a showing by the owner or operator of such point source satisfactory to the Administrator that such modified requirements (1) will represent the maximum use of technology within the economic capability of the owner or operator; and (2) will result in reasonable further progress toward the elimination of the discharge of pollutants.

"(d) Any effluent limitation required by paragraph (2) of subsection (b) of this section shall be reviewed at least every five years and, if appropriate, revised pursuant to the procedure established under such paragraph.

"(e) Effluent limitations established pursuant to this section or section 302 of this Act shall be applied to all point sources of discharge of pollutants in accordance with the provisions of this Act.

"(f) Notwithstanding any other provisions of this Act it shall be unlawful to discharge any radiological, chemical, or biological warfare agent or high-level radioactive waste into the navigable waters.

"WATER QUALITY RELATED EFFLUENT LIMITATIONS

"SEC. 302. (a) Whenever, in the judgment of the Administrator, discharges of pollutants from a point source or group of point sources, with the application of effluent limitations required under section 301(b)(2) of this Act, would interfere with the attainment or maintenance of that water quality in a specific portion of the navigable waters which shall assure protection of public water supplies, agricultural and industrial uses, and the protection and propagation of a balanced population of shellfish, fish and wildlife, and allow recreational activities in and on the water, effluent limitations (including alternative effluent control strategies) for such point source or sources shall be established which can reasonably be expected to contribute to the attainment or maintenance of such water quality.

"(b)(1) Prior to establishment of any effluent limitation pursuant to subsection (a) of this section, the Administrator shall issue notice of intent to establish such limitation and within ninety days of such notice hold a public hearing to determine the relationship of the economic and social costs of achieving any such limitation or limitations, including any economic or social dislocation in the affected community or communities, to the social and economic benefits to be obtained (including the attainment of the objective of this Act) and to determine whether or not such effluent limitations can be implemented with available technology or other alternative control strategies. Public hearing.

"(2) If a person affected by such limitation demonstrates at such hearing that (whether or not such technology or other alternative control strategies are available) there is no reasonable relationship between the economic and social costs and the benefits to be obtained (including attainment of the objective of this Act), such limitation shall not become effective and the Administrator shall adjust such limitation as it applies to such person.

"(c) The establishment of effluent limitations under this section shall not operate to delay the application of any effluent limitation established under section 301 of this Act.

"WATER QUALITY STANDARDS AND IMPLEMENTATION PLANS

"SEC. 303. (a)(1) In order to carry out the purpose of this Act, any water quality standard applicable to interstate waters which was adopted by any State and submitted to, and approved by, or is awaiting approval by, the Administrator pursuant to this Act as in effect immediately prior to the date of enactment of the Federal Water Pollution Control Act Amendments of 1972, shall remain in effect unless the Administrator determined that such standard is not consistent with the applicable requirements of this Act as in effect immediately prior to the date of enactment of the Federal Water Pollution Control Act Amendments of 1972. If the Administrator makes such a determination he shall, within three months after the date of enactment of the Federal Water Pollution Control Act Amendments of 1972, notify the State and specify the changes needed to meet such requirements. If such changes are not adopted by the State within ninety days after the date of such notification, the Administrator shall promulgate such changes in accordance with subsection (b) of this section.

"(2) Any State which, before the date of enactment of the Federal Water Pollution Control Act Amendments of 1972, has adopted, pursuant to its own law, water quality standards applicable to intrastate waters shall submit such standards to the Administrator within thirty days after the date of enactment of the Federal Water Pollution Control Act Amendments of 1972. Each such standard shall remain in effect, in the same manner and to the same extent as any other water quality standard established under this Act unless the Administrator determines that such standard is inconsistent with the applicable requirements of this Act as in effect immediately prior to the date of enactment of the Federal Water Pollution Control Act Amendments of 1972. If the Administrator makes such a determination he shall not later than the one hundred and twentieth day after the date of submission of such standards, notify the State and specify the changes needed to meet such requirements. If such changes are not adopted by the State within ninety days after such notification, the Administrator shall promulgate such changes in accordance with subsection (b) of this section.

"(3)(A) Any State which prior to the date of enactment of the Federal Water Pollution Control Act Amendments of 1972 has not adopted pursuant to its own laws water quality standards applicable to intrastate waters shall, not later than one hundred and eighty days after the date of enactment of the Federal Water Pollution Control Act Amendments of 1972, adopt and submit such standards to the Administrator.

"(B) If the Administrator determines that any such standards are consistent with the applicable requirements of this Act as in effect immediately prior to the date of enactment of the Federal Water Pollution Control Act Amendments of 1972, he shall approve such standards.

"(C) If the Administrator determines that any such standards are not consistent with the applicable requirements of this Act as in effect immediately prior to the date of enactment of the Federal Water Pollution Control Act Amendments of 1972, he shall, not later than the ninetieth day after the date of submission of such standards, notify the State and specify the changes to meet such requirements. If such changes are not adopted by the State within ninety days after the date of notification, the Administrator shall promulgate such standards pursuant to subsection (b) of this section.

Proposed regulations, publication.

"(b)(1) The Administrator shall promptly prepare and publish proposed regulations setting forth water quality standards for a State in accordance with the applicable requirements of this Act as in effect immediately prior to the date of enactment of the Federal Water Pollution Control Act Amendments of 1972, if—

"(A) the State fails to submit water quality standards within the times prescribed in subsection (a) of this section,

"(B) a water quality standard submitted by such State under subsection (a) of this section is determined by the Administrator not to be consistent with the applicable requirements of subsection (a) of this section.

"(2) The Administrator shall promulgate any water quality standard published in a proposed regulation not later than one hundred and ninety days after the date he publishes any such proposed standard, unless prior to such promulgation, such State has adopted a water quality standard which the Administrator determines to be in accordance with subsection (a) of this section.

Review.

"(c)(1) The Governor of a State or the State water pollution control agency of such State shall from time to time (but at least once each three year period beginning with the date of enactment of the Federal Water Pollution Control Act Amendments of 1972) hold public hearings for the purpose of reviewing applicable water quality standards and, as appropriate, modifying and adopting standards. Results of such review shall be made available to the Administrator.

Revised standards.

"(2) Whenever the State revises or adopts a new standard, such revised or new standard shall be submitted to the Administrator. Such revised or new water quality standard shall consist of the designated uses of the navigable waters involved and the water quality criteria for such waters based upon such uses. Such standards shall be such as to protect the public health or welfare, enhance the quality of water and serve the purposes of this Act. Such standards shall be established taking into consideration their use and value for public water supplies, propagation of fish and wildlife, recreational purposes, and agricultural, industrial, and other purposes, and also taking into consideration their use and value for navigation.

"(3) If the Administrator, within sixty days after the date of submission of the revised or new standard, determines that such standard meets the requirements of this Act, such standard shall thereafter be the water quality standard for the applicable waters of that State. If the Administrator determines that any such revised or new standard is not consistent with the applicable requirements of this Act, he shall not later than the ninetieth day after the date of submission of such standard notify the State and specify the changes to meet such requirements. If such changes are not adopted by the State within ninety days after the date of notification, the Administrator shall promulgate such standard pursuant to paragraph (4) of this subsection.

Publication.

"(4) The Administrator shall promptly prepare and publish proposed regulations setting forth a revised or new water quality standard for the navigable waters involved—

"(A) if a revised or new water quality standard submitted by such State under paragraph (3) of this subsection for such waters is determined by the Administrator not to be consistent with the applicable requirements of this Act, or

"(B) in any case where the Administrator determines that a revised or new standard is necessary to meet the requirements of this Act.

The Administrator shall promulgate any revised or new standard under this paragraph not later than ninety days after he publishes such proposed standards, unless prior to such promulgation, such State has adopted a revised or new water quality standard which the Administrator determines to be in accordance with this Act.

Insufficient controls, area identification.

"(d)(1)(A) Each State shall identify those waters within its boundaries for which the effluent limitations required by section 301(b)(1)(A) and section 301(b)(1)(B) are not stringent enough to implement any water quality standard applicable to such waters. The State shall establish a priority ranking for such waters, taking into account the severity of the pollution and the uses to be made of such waters.

"(B) Each State shall identify those waters or parts thereof within its boundaries for which controls on thermal discharges under section 301 are not stringent enough to assure protection and propagation of a balanced indigenous population of shellfish, fish, and wildlife.

Maximum daily load.

"(C) Each State shall establish for the waters identified in paragraph (1)(A) of this subsection, and in accordance with the priority ranking, the total maximum daily load, for those pollutants which the Administrator identifies under section 304(a)(2) as suitable for such calculation. Such load shall be established at a level necessary to implement the applicable water quality standards with seasonal variations and a margin of safety which takes into account any lack of

knowledge concerning the relationship between effluent limitations and water quality.

Maximum daily thermal load.

"(D) Each State shall estimate for the waters identified in paragraph (1)(B) of this subsection the total maximum daily thermal load required to assure protection and propagation of a balanced, indigenous population of shellfish, fish and wildlife. Such estimates shall take into account the normal water temperatures, flow rates, seasonal variations, existing sources of heat input, and the dissipative capacity of the identified waters or parts thereof. Such estimates shall include a calculation of the maximum heat input that can be made into each such part and shall include a margin of safety which takes into account any lack of knowledge concerning the development of thermal water quality criteria for such protection and propagation in the identified waters or parts thereof.

"(2) Each State shall submit to the Administrator from time to time, with the first such submission not later than one hundred and eighty days after the date of publication of the first identification of pollutants under section 304(a)(2)(D), for his approval the waters identified and the loads established under paragraphs (1)(A), (1)(B), (1)(C), and (1)(D) of this subsection. The Administrator shall either approve or disapprove such identification and load not later than thirty days after the date of submission. If the Administrator approves such identification and load, such State shall incorporate them into its current plan under subsection (e) of this section. If the Administrator disapproves such identification and load, he shall not later than thirty days after the date of such disapproval identify such waters in such State and establish such loads for such waters as he determines necessary to implement the water quality standards applicable to such waters and upon such identification and establishment the State shall incorporate them into its current plan under subsection (e) of this section.

"(3) For the specific purpose of developing information, each State shall identify all waters within its boundaries which it has not identified under paragraph (1)(A) and (1)(B) of this subsection and estimate for such waters the total maximum daily load with seasonal variations and margins of safety, for those pollutants which the Administrator identifies under section 304(a)(2) as suitable for such calculation and for thermal discharges, at a level that would assure protection and propagation of a balanced indigenous population of fish, shellfish and wildlife.

Continuing planning process.

"(e)(1) Each State shall have a continuing planning process approved under paragraph (2) of this subsection which is consistent with this Act.

"(2) Each State shall submit not later than 120 days after the date of the enactment of the Water Pollution Control Amendments of 1972 to the Administrator for his approval a proposed continuing planning process which is consistent with this Act. Not later than thirty days after the date of submission of such a process the Administrator shall either approve or disapprove such process. The Administrator shall from time to time review each State's approved planning process for the purpose of insuring that such planning process is at all times consistent with this Act. The Administrator shall not approve any State permit program under title IV of this Act for any State which does not have an approved continuing planning process under this section.

"(3) The Administrator shall approve any continuing planning process submitted to him under this section which will result in plans for all navigable waters within such State, which include, but are not limited to, the following:

"(A) effluent limitations and schedules of compliance at least as stringent as those required by section 301(b)(1), section 301(b)(2), section 306, and section 307, and at least as stringent as any requirements contained in any applicable water quality standard in effect under authority of this section;

"(B) the incorporation of all elements of any applicable area-wide waste management plans under section 208, and applicable basin plans under section 209 of this Act;

"(C) total maximum daily load for pollutants in accordance with subsection (d) of this section;

"(D) procedures for revision;

"(E) adequate authority for intergovernmental cooperation;

"(F) adequate implementation, including schedules of compliance, for revised or new water quality standards, under subsection (c) of this section;

"(G) controls over the disposition of all residual waste from any water treatment processing;

"(H) an inventory and ranking, in order of priority, of needs for construction of waste treatment works required to meet the applicable requirements of sections 301 and 302.

"(f) Nothing in this section shall be construed to affect any effluent limitation, or schedule of compliance required by any State to be implemented prior to the dates set forth in sections 301(b)(1) and 301(b)(2) nor to preclude any State from requiring compliance with any effluent limitation or schedule of compliance at dates earlier than such dates.

Heat standards.

"(g) Water quality standards relating to heat shall be consistent with the requirements of section 316 of this Act.

"Water quality standards."

"(h) For the purposes of this Act the term 'water quality standards' includes thermal water quality standards.

"INFORMATION AND GUIDELINES

Water quality criteria publication.

"SEC. 304. (a)(1) The Administrator, after consultation with appropriate Federal and State agencies and other interested persons, shall develop and publish, within one year after the date of enactment of this title (and from time to time thereafter revise) criteria for water quality accurately reflecting the latest scientific knowledge (A) on the kind and extent of all identifiable effects on health and welfare including, but not limited to, plankton, fish, shellfish, wildlife, plant life, shorelines, beaches, esthetics, and recreation which may be expected from the presence of pollutants in any body of water, including ground water; (B) on the concentration and dispersal of pollutants, or their byproducts, through biological, physical, and chemical processes; and (C) on the effects of pollutants on biological community diversity, productivity, and stability, including information on the factors affecting rates of eutrophication and rates of organic and inorganic sedimentation for varying types of receiving waters.

"(2) The Administrator, after consultation with appropriate Federal and State agencies and other interested persons, shall develop and publish, within one year after the date of enactment of this title (and from time to time thereafter revise) information (A) on the factors necessary to restore and maintain the chemical, physical, and biological integrity of all navigable waters, ground waters, waters of the contiguous zone, and the oceans; (B) on the factors necessary for the protection and propagation of shellfish, fish, and wildlife for classes and categories of receiving waters and to allow recreational activities in and on the water; and (C) on the measurement and classification of water quality; and (D) for the purpose of section 303, on and the

identification of pollutants suitable for maximum daily load measurement correlated with the achievement of water quality objectives.

Publication in Federal Register.

"(3) Such criteria and information and revisions thereof shall be issued to the States and shall be published in the Federal Register and otherwise made available to the public.

Effluent limitation guidelines, publication.

"(b) For the purpose of adopting or revising effluent limitations under this Act the Administrator shall, after consultation with appropriate Federal and State agencies and other interested persons, publish within one year of enactment of this title, regulations, providing guidelines for effluent limitations, and, at least annually thereafter, revise, if appropriate, such regulations. Such regulations shall—

"(1)(A) identify, in terms of amounts of constituents and chemical, physical, and biological characteristics of pollutants, the degree of effluent reduction attainable through the application of the best practicable control technology currently available for classes and categories of point sources (other than publicly owned treatment works); and

"(B) specify factors to be taken into account in determining the control measures and practices to be applicable to point sources (other than publicly owned treatment works) within such categories or classes. Factors relating to the assessment of best practicable control technology currently available to comply with subsection (b)(1) of section 301 of this Act shall include consideration of the total cost of application of technology in relation to the effluent reduction benefits to be achieved from such application, and shall also take into account the age of equipment and facilities involved, the process employed, the engineering aspects of the application of various types of control techniques, process changes, non-water quality environmental impact (including energy requirements), and such other factors as the Administrator deems appropriate;

"(2)(A) identify, in terms of amounts of constituents and chemical, physical, and biological characteristics of pollutants, the degree of effluent reduction attainable through the application of the best control measures and practices achievable including treatment techniques, process and procedure innovations, operating methods, and other alternatives for classes and categories of point sources (other than publicly owned treatment works); and

"(B) specify factors to be taken into account in determining the best measures and practices available to comply with subsection (b)(2) of section 301 of this Act to be applicable to any point source (other than publicly owned treatment works) within such categories or classes. Factors relating to the assessment of best available technology shall take into account the age of equipment and facilities involved, the process employed, the engineering aspects of the application of various types of control techniques, process changes, the cost of achieving such effluent reduction, non-water quality environmental impact (including energy requirements), and such other factors as the Administrator deems appropriate; and

"(3) identify control measures and practices available to eliminate the discharge of pollutants from categories and classes of point sources, taking into account the cost of achieving such elimination of the discharge of pollutants.

Pollution discharges, elimination procedures information.

"(c) The Administrator, after consultation, with appropriate Federal and State agencies and other interested persons, shall issue to the States and appropriate water pollution control agencies within 270 days after enactment of this title (and from time to time thereafter) information on the processes, procedures, or operating methods which

result in the elimination or reduction of the discharge of pollutants to implement standards of performance under section 306 of this Act. Such information shall include technical and other data, including costs, as are available on alternative methods of elimination or reduction of the discharge of pollutants. Such information, and revisions thereof, shall be published in the Federal Register and otherwise shall be made available to the public.

Alternative waste treatment methods. Publication in Federal Register.

Secondary treatment information.

"(d)(1) The Administrator, after consultation with appropriate Federal and State agencies and other interested persons, shall publish within sixty days after enactment of this title (and from time to time thereafter) information, in terms of amounts of constituents and chemical, physical, and biological characteristics of pollutants, on the degree of effluent reduction attainable through the application of secondary treatment.

"(2) The Administrator, after consultation with appropriate Federal and State agencies and other interested persons, shall publish within nine months after the date of enactment of this title (and from time to time thereafter) information on alternative waste treatment management techniques and systems available to implement section 201 of this Act.

"(e) The Administrator, after consultation with appropriate Federal and State agencies and other interested persons, shall issue to appropriate Federal agencies, the States, water pollution control agencies, and agencies designated under section 208 of this Act, within one year after the effective date of this subsection (and from time to time thereafter) information including (1) guidelines for identifying and evaluating the nature and extent of nonpoint sources of pollutants, and (2) processes, procedures, and methods to control pollution resulting from—

"(A) agricultural and silvicultural activities, including runoff from fields and crop and forest lands;

"(B) mining activities, including runoff and siltation from new, currently operating, and abandoned surface and underground mines;

"(C) all construction activity, including runoff from the facilities resulting from such construction;

"(D) the disposal of pollutants in wells or in subsurface excavations;

"(E) salt water intrusion resulting from reductions of fresh water flow from any cause, including extraction of ground water, irrigation, obstruction, and diversion; and

"(F) changes in the movement, flow, or circulation of any navigable waters or ground waters, including changes caused by the construction of dams, levees, channels, causeways, or flow diversion facilities.

Such information and revisions thereof shall be published in the Federal Register and otherwise made available to the public.

Publication in Federal Register.

Pretreatment standards guidelines, publication.

"(f)(1) For the purpose of assisting States in carrying out programs under section 402 of this Act, the Administrator shall publish, within one hundred and twenty days after the date of enactment of this title, and review at least annually thereafter and, if appropriate, revise guidelines for pretreatment of pollutants which he determines are not susceptible to treatment by publicly owned treatment works. Guidelines under this subsection shall be established to control and prevent the discharge into the navigable waters, the contiguous zone, or the ocean (either directly or through publicly owned treatment works) of any pollutant which interferes with, passes through, or otherwise is incompatible with such works.

"(2) When publishing guidelines under this subsection, the Administrator shall designate the category or categories of treatment works to which the guidelines shall apply.

Test procedures, guidelines.

"(g) The Administrator shall, within one hundred and eighty days from the date of enactment of this title, promulgate guidelines establishing test procedures for the analysis of pollutants that shall include the factors which must be provided in any certification pursuant to section 401 of this Act or permit application pursuant to section 402 of this Act.

Monitoring, reporting, etc., guidelines.

"(h) The Administrator shall (1) within sixty days after the enactment of this title promulgate guidelines for the purpose of establishing uniform application forms and other minimum requirements for the acquisition of information from owners and operators of point-sources of discharge subject to any State program under section 402 of this Act, and (2) within sixty days from the date of enactment of this title promulgate guidelines establishing the minimum procedural and other elements of any State program under section 402 of this Act which shall include:

"(A) monitoring requirements;

"(B) reporting requirements (including procedures to make information available to the public);

"(C) enforcement provisions; and

"(D) funding, personnel qualifications, and manpower requirements (including a requirement that no board or body which approves permit applications or portions thereof shall include, as a member, any person who receives, or has during the previous two years received, a significant portion of his income directly or indirectly from permit holders or applicants for a permit).

"(i) The Administrator shall, within 270 days after the effective date of this subsection (and from time to time thereafter), issue such information on methods, procedures, and processes as may be appropriate to restore and enhance the quality of the Nation's publicly owned fresh water lakes.

"(j)(1) The Administrator shall, within six months from the date of enactment of this title, enter into agreements with the Secretary of Agriculture, the Secretary of the Army, and the Secretary of the Interior to provide for the maximum utilization of the appropriate programs authorized under other Federal law to be carried out by such Secretaries for the purpose of achieving and maintaining water quality through appropriate implementation of plans approved under section 208 of this Act.

Transfer of funds.

"(2) The Administrator, pursuant to any agreement under paragraph (1) of this subsection is authorized to transfer to the Secretary of Agriculture, the Secretary of the Army, or the Secretary of the Interior any funds appropriated under paragraph (3) of this subsection to supplement any funds otherwise appropriated to carry out appropriate programs authorized to be carried out by such Secretaries.

Appropriation.

"(3) There is authorized to be appropriated to carry out the provisions of this subsection, $100,000,000 per fiscal year for the fiscal year ending June 30, 1973, and the fiscal year ending June 30, 1974.

"WATER QUALITY INVENTORY

Report to Congress.

"SEC. 305. (a) The Administrator, in cooperation with the States and with the assistance of appropriate Federal agencies, shall prepare a report to be submitted to the Congress on or before January 1, 1974, which shall—

"(1) describe the specific quality, during 1973, with appropriate supplemental descriptions as shall be required to take into account seasonal, tidal, and other variations, of all navigable waters and the waters of the contiguous zone;

"(2) include an inventory of all point sources of discharge (based on a qualitative and quantitative analysis of discharges) of pollutants, into all navigable waters and the waters of the contiguous zone; and

"(3) identify specifically those navigable waters, the quality of which—

"(A) is adequate to provide for the protection and propagation of a balanced population of shellfish, fish, and wildlife and allow recreational activities in and on the water;

"(B) can reasonably be expected to attain such level by 1977 or 1983; and

"(C) can reasonably be expected to attain such level by any later date.

State reports.

"(b)(1) Each State shall prepare and submit to the Administrator by January 1, 1975, and shall bring up to date each year thereafter, a report which shall include—

"(A) a description of the water quality of all navigable waters in such State during the preceding year, with appropriate supplemental descriptions as shall be required to take into account seasonal, tidal, and other variations, correlated with the quality of water required by the objective of this Act (as identified by the Administrator pursuant to criteria published under section 304(a) of this Act) and the water quality described in subparagraph (B) of this paragraph;

"(B) an analysis of the extent to which all navigable waters of such State provide for the protection and propagation of a balanced population of shellfish, fish, and wildlife, and allow recreational activities in and on the water;

"(C) an analysis of the extent to which the elimination of the discharge of pollutants and a level of water quality which provides for the protection and propagation of a balanced population of shellfish, fish, and wildlife and allows recreational activities in and on the water, have been or will be achieved by the requirements of this Act, together with recommendations as to additional action necessary to achieve such objectives and for what waters such additional action is necessary;

"(D) an estimate of (i) the environmental impact, (ii) the economic and social costs necessary to achieve the objective of this Act in such State, (iii) the economic and social benefits of such achievement, and (iv) an estimate of the date of such achievement; and

"(E) a description of the nature and extent of nonpoint sources of pollutants, and recommendations as to the programs which must be undertaken to control each category of such sources, including an estimate of the costs of implementing such programs.

Transmittal to Congress.

"(2) The Administrator shall transmit such State reports, together with an analysis thereof, to Congress on or before October 1, 1975, and annually thereafter.

"NATIONAL STANDARDS OF PERFORMANCE

Definitions.

"SEC. 306. (a) For purposes of this section:

"(1) The term 'standard of performance' means a standard for the control of the discharge of pollutants which reflects the greatest degree of effluent reduction which the Administrator determines to be achievable through application of the best available demonstrated control technology, processes, operating methods, or other alterna-

tives, including, where practicable, a standard permitting no discharge of pollutants.

"(2) The term 'new source' means any source, the construction of which is commenced after the publication of proposed regulations prescribing a standard of performance under this section which will be applicable to such source, if such standard is thereafter promulgated in accordance with this section.

"(3) The term 'source' means any building, structure, facility, or installation from which there is or may be the discharge of pollutants.

"(4) The term 'owner or operator' means any person who owns, leases, operates, controls, or supervises a source.

"(5) The term 'construction' means any placement, assembly, or installation of facilities or equipment (including contractual obligations to purchase such facilities or equipment) at the premises where such equipment will be used, including preparation work at such premises.

Sources, category list, publication.

"(b)(1)(A) The Administrator shall, within ninety days after the date of enactment of this title publish (and from time to time thereafter shall revise) a list of categories of sources, which shall, at the minimum, include:

"pulp and paper mills;
"paperboard, builders paper and board mills;
"meat product and rendering processing;
"dairy product processing;
"grain mills;
"canned and preserved fruits and vegetables processing;
"canned and preserved seafood processing;
"sugar processing;
"textile mills;
"cement manufacturing;
"feedlots;
"electroplating;
"organic chemicals manufacturing;
"inorganic chemicals manufacturing;
"plastic and synthetic materials manufacturing;
"soap and detergent manufacturing;
"fertilizer manufacturing;
"petroleum refining;
"iron and steel manufacturing;
"nonferrous metals manufacturing;
"phosphate manufacturing;
"steam electric powerplants;
"ferroalloy manufacturing;
"leather tanning and finishing;
"glass and asbestos manufacturing;
"rubber processing; and
"timber products processing.

Federal standards of performance, publication of regulations.

"(B) As soon as practicable, but in no case more than one year, after a category of sources is included in a list under subparagraph (A) of this paragraph, the Administrator shall propose and publish regulations establishing Federal standards of performance for new sources within such category. The Administrator shall afford interested persons an opportunity for written comment on such proposed regulations. After considering such comments, he shall promulgate, within one hundred and twenty days after publication of such proposed regulations, such standards with such adjustments as he deems appropriate. The Administrator shall, from time to time, as technology and alternatives change, revise such standards following the procedure required by this subsection for promulgation of such standards. Standards of performance, or revisions thereof, shall become effective upon promulgation. In establishing or revising Federal standards of performance for new sources under this section, the Administrator shall take into consideration the cost of achieving such effluent reduction, and any non-water quality environmental impact and energy requirements.

"(2) The Administrator may distinguish among classes, types, and sizes within categories of new sources for the purpose of establishing such standards and shall consider the type of process employed (including whether batch or continuous).

"(3) The provisions of this section shall apply to any new source owned or operated by the United States.

Standards of performance, State enforcement procedure.

"(c) Each State may develop and submit to the Administrator a procedure under State law for applying and enforcing standards of performance for new sources located in such State. If the Administrator finds that the procedure and the law of any State require the application and enforcement of standards of performance to at least the same extent as required by this section, such State is authorized to apply and enforce such standards of performance (except with respect to new sources owned or operated by the United States).

"(d) Notwithstanding any other provision of this Act, any point source the construction of which is commenced after the date of enactment of the Federal Water Pollution Control Act Amendments of 1972 and which is so constructed as to meet all applicable standards of performance shall not be subject to any more stringent standard of performance during a ten-year period beginning on the date of completion of such construction or during the period of depreciation or amortization of such facility for the purposes of section 167 or 169 (or both) of the Internal Revenue Code of 1954, whichever period ends first.

68A Stat. 51; 85 Stat. 508. 83 Stat. 667. 26 USC 167, 169.

"(e) After the effective date of standards of performance promulgated under this section, it shall be unlawful for any owner or operator of any new source to operate such source in violation of any standard of performance applicable to such source.

"TOXIC AND PRETREATMENT EFFLUENT STANDARDS

"SEC. 307. (a)(1) The Administrator shall, within ninety days after the date of enactment of this title, publish (and from time to time thereafter revise) a list which includes any toxic pollutant or combination of such pollutants for which an effluent standard (which may include a prohibition of the discharge of such pollutants or combination of such pollutants) will be established under this section. The Administrator in publishing such list shall take into account the toxicity of the pollutant, its persistence, degradability, the usual or potential presence of the affected organisms in any waters, the importance of the affected organisms and the nature and extent of the effect of the toxic pollutant on such organisms.

Proposed effluent standard, publication.

"(2) Within one hundred and eighty days after the date of publication of any list, or revision thereof, containing toxic pollutants or combination of pollutants under paragraph (1) of this subsection, the Administrator, in accordance with section 553 of title 5 of the United States Code, shall publish a proposed effluent standard (or a prohibition) for such pollutant or combination of pollutants which shall take into account the toxicity of the pollutant, its persistence, degradability,

80 Stat. 383.

the usual or potential presence of the affected organisms in any waters, the importance of the affected organisms and the nature and extent of the effect of the toxic pollutant on such organisms, and he shall publish a notice for a public hearing on such proposed standard to be held within thirty days. As soon as possible after such hearing, but not later than six months after publication of the proposed effluent standard (or prohibition), unless the Administrator finds, on the record, that a modification of such proposed standard (or prohibition) is justified based upon a preponderance of evidence adduced at such hearings, such standard (or prohibition) shall be promulgated.

Hearing.

"(3) If after a public hearing the Administrator finds that a modification of such proposed standard (or prohibition) is justified, a revised effluent standard (or prohibition) for such pollutant or combination of pollutants shall be promulgated immediately. Such standard (or prohibition) shall be reviewed and, if appropriate, revised at least every three years.

Revised effluent standard.

"(4) Any effluent standard promulgated under this section shall be at that level which the Administrator determines provides an ample margin of safety.

"(5) When proposing or promulgating any effluent standard (or prohibition) under this section, the Administrator shall designate the category or categories of sources to which the effluent standard (or prohibition) shall apply. Any disposal of dredged material may be included in such a category of sources after consultation with the Secretary of the Army.

"(6) Any effluent standard (or prohibition) established pursuant to this section shall take effect on such date or dates as specified in the order promulgating such standard, but in no case more than one year from the date of such promulgation.

Effective date.

"(7) Prior to publishing any regulations pursuant to this section the Administrator shall, to the maximum extent practicable within the time provided, consult with appropriate advisory committees, States, independent experts, and Federal departments and agencies.

14.1-19

"(b)(1) The Administrator shall, within one hundred and eighty days after the date of enactment of this title and from time to time thereafter, publish proposed regulations establishing pretreatment standards for introduction of pollutants into treatment works (as defined in section 212 of this Act) which are publicly owned for those pollutants which are determined not to be susceptible to treatment by such treatment works or which would interfere with the operation of such treatment works. Not later than ninety days after such publication, and after opportunity for public hearing, the Administrator shall promulgate such pretreatment standards. Pretreatment standards under this subsection shall specify a time for compliance not to exceed three years from the date of promulgation and shall be established to prevent the discharge of any pollutant through treatment works (as defined in section 212 of this Act) which are publicly owned, which pollutant interferes with, passes through, or otherwise is incompatible with such works.

Pretreatment standards, proposed regulations, publication.

"(2) The Administrator shall, from time to time, as control technology, processes, operating methods, or other alternatives change, revise such standards following the procedure established by this subsection for promulgation of such standards.

"(3) When proposing or promulgating any pretreatment standard under this section, the Administrator shall designate the category or categories of sources to which such standard shall apply.

"(4) Nothing in this subsection shall affect any pretreatment requirement established by any State or local law not in conflict with any pretreatment standard established under this subsection.

"(c) In order to insure that any source introducing pollutants into a publicly owned treatment works, which source would be a new source subject to section 306 if it were to discharge pollutants, will not cause a violation of the effluent limitations established for any such treatment works, the Administrator shall promulgate pretreatment standards for the category of such sources simultaneously with the promulgation of standards of performance under section 306 for the equivalent category of new sources. Such pretreatment standards shall prevent the discharge of any pollutant into such treatment works, which pollutant may interfere with, pass through, or otherwise be incompatible with such works.

"(d) After the effective date of any effluent standard or prohibition or pretreatment standard promulgated under this section, it shall be unlawful for any owner or operator of any source to operate any source in violation of any such effluent standard or prohibition or pretreatment standard.

"INSPECTIONS, MONITORING AND ENTRY

"SEC. 308. (a) Whenever required to carry out the objective of this Act, including but not limited to (1) developing or assisting in the development of any effluent limitation, or other limitation, prohibition, or effluent standard, pretreatment standard, or standard of performance under this Act; (2) determining whether any person is in violation of any such effluent limitation, or other limitation, prohibition or effluent standard, pretreatment standard, or standard of performance; (3) any requirement established under this section; or (4) carrying out sections 305, 311, 402, and 504 of this Act—

Recordkeeping; reports.

"(A) the Administrator shall require the owner or operator of any point source to (i) establish and maintain such records, (ii) make such reports, (iii) install, use, and maintain such monitoring equipment or methods (including where appropriate, biological monitoring methods), (iv) sample such effluents (in accordance with such methods, at such locations, at such intervals, and in such manner as the Administrator shall prescribe), and (v) provide such other information as he may reasonably require; and

"(B) the Administrator or his authorized representative, upon presentation of his credentials—

"(i) shall have a right of entry to, upon, or through any premises in which an effluent source is located or in which any records required to be maintained under clause (A) of this subsection are located, and

"(ii) may at reasonable times have access to and copy any records, inspect any monitoring equipment or method required under clause (A), and sample any effluents which the owner or operator of such source is required to sample under such clause.

"(b) Any records, reports, or information obtained under this section (1) shall, in the case of effluent data, be related to any applicable effluent limitations, toxic, pretreatment, or new source performance standards, and (2) shall be available to the public, except that upon a showing satisfactory to the Administrator by any person that records, reports, or information, or particular part thereof (other than effluent data), to which the Administrator has access under this section, if made public would divulge methods or processes entitled to protection as trade secrets of such person, the Administrator shall consider such record, report, or information, or particular portion thereof confidential in accordance with the purposes of section 1905

62 Stat. 791. of title 18 of the United States Code, except that such record, report, or information may be disclosed to other officers, employees, or authorized representatives of the United States concerned with carrying out this Act or when relevant in any proceeding under this Act.

"(c) Each State may develop and submit to the Administrator procedures under State law for inspection, monitoring, and entry with respect to point sources located in such State. If the Administrator finds that the procedures and the law of any State relating to inspection, monitoring, and entry are applicable to at least the same extent as those required by this section, such State is authorized to apply and enforce its procedures for inspection, monitoring, and entry with respect to point sources located in such State (except with respect to point sources owned or operated by the United States).

"FEDERAL ENFORCEMENT

"SEC. 309. (a)(1) Whenever, on the basis of any information available to him, the Administrator finds that any person is in violation of any condition or limitation which implements section 301, 302, 306, 307, or 308 of this Act in a permit issued by a State under an approved permit program under section 402 of this Act, he shall proceed under his authority in paragraph (3) of this subsection or he shall notify the person in alleged violation and such State of such finding. If beyond the thirtieth day after the Administrator's notification the State has not commenced appropriate enforcement action, the Administrator shall issue an order requiring such person to comply with such condition or limitation or shall bring a civil action in accordance with subsection (b) of this section.

"(2) Whenever, on the basis of information available to him, the Administrator finds that violations of permit conditions or limitations as set forth in paragraph (1) of this subsection are so widespread that such violations appear to result from a failure of the State to enforce such permit conditions or limitations effectively, he shall so notify the State. If the Administrator finds such failure extends beyond the thirtieth day after such notice, he shall give public notice of such finding. During the period beginning with such public notice and ending when such State satisfies the Administrator that it will enforce such conditions and limitations (hereafter referred to in this section as the period of 'federally assumed enforcement'), the Administrator shall enforce any permit condition or limitation with respect to any person—

"(A) by issuing an order to comply with such condition or limitation, or

"(B) by bringing a civil action under subsection (b) of this section.

"(3) Whenever on the basis of any information available to him the Administrator finds that any person is in violation of section 301, 302, 306, 307, or 308 of this Act, or is in violation of any permit condition or limitation implementing any of such sections in a permit issued under section 402 of this Act by him or by a State, he shall issue an order requiring such person to comply with such section or requirement, or he shall bring a civil action in accordance with subsection (b) of this section.

"(4) A copy of any order issued under this subsection shall be sent immediately by the Administrator to the State in which the violation occurs and other affected States. Any order issued under this subsection shall be by personal service and shall state with reasonable specificity the nature of the violation, specify a time for compliance, not to exceed thirty days, which the Administrator determines is reasonable, taking into account the seriousness of the violation and any good faith efforts

14.1-20

to comply with applicable requirements. In any case in which an order under this subsection (or notice to a violator under paragraph (1) of this subsection) is issued to a corporation, a copy of such order (or notice) shall be served on any appropriate corporate officers. An order issued under this subsection relating to a violation of section 308 of this Act shall not take effect until the person to whom it is issued has had an opportunity to confer with the Administrator concerning the alleged violation.

"(b) The Administrator is authorized to commence a civil action for appropriate relief, including a permanent or temporary injunction, for any violation for which he is authorized to issue a compliance order under subsection (a) of this section. Any action under this subsection may be brought in the district court of the United States for the district in which the defendant is located or resides or is doing business, and such court shall have jurisdiction to restrain such violation and to require compliance. Notice of the commencement of such action shall be given immediately to the appropriate State.

"(c)(1) Any person who willfully or negligently violates section 301, 302, 306, 307, or 308 of this Act, or any permit condition or limitation implementing any of such sections in a permit issued under section 402 of this Act by the Administrator or by a State, shall be punished by a fine of not less than $2,500 nor more than $25,000 per day of violation, or by imprisonment for not more than one year, or by both. If the conviction is for a violation committed after a first conviction of such person under this paragraph, punishment shall be by a fine of not more than $50,000 per day of violation, or by imprisonment for not more than two years, or by both. Penalties.

"(2) Any person who knowingly makes any false statement, representation, or certification in any application, record, report, plan, or other document filed or required to be maintained under this Act or who falsifies, tampers with, or knowingly renders inaccurate any monitoring device or method required to be maintained under this Act, shall upon conviction, be punished by a fine of not more than $10,000, or by imprisonment for not more than six months, or by both.

"(3) For the purposes of this subsection, the term 'person' shall mean, in addition to the definition contained in section 502(5) of this Act, any responsible corporate officer. "Person."

"(d) Any person who violates section 301, 302, 306, 307, or 308 of this Act, or any permit condition or limitation implementing any of such sections in a permit issued under section 402 of this Act by the Administrator, or by a State, and any person who violates any order issued by the Administrator under subsection (a) of this section, shall be subject to a civil penalty not to exceed $10,000 per day of such violation.

"(e) Whenever a municipality is a party to a civil action brought by the United States under this section, the State in which such municipality is located shall be joined as a party. Such State shall be liable for payment of any judgment, or any expenses incurred as a result of complying with any judgment, entered against the municipality in such action to the extent that the laws of that State prevent the municipality from raising revenues needed to comply with such judgment.

"INTERNATIONAL POLLUTION ABATEMENT

"SEC. 310. (a) Whenever the Administrator, upon receipts of reports, surveys, or studies from any duly constituted international agency, has reason to believe that pollution is occurring which endangers the health or welfare of persons in a foreign country, and the Secretary of State requests him to abate such pollution, he shall give

formal notification thereof to the State water pollution control agency of the State or States in which such discharge or discharges originate and to the appropriate interstate agency, if any. He shall also promptly call such a hearing, if he believes that such pollution is occurring in sufficient quantity to warrant such action, and if such foreign country has given the United States essentially the same rights with respect to the prevention and control of pollution occurring in that country as is given that country by this subsection. The Administrator, through the Secretary of State, shall invite the foreign country which may be adversely affected by the pollution to attend and participate in the hearing, and the representative of such country shall, for the purpose of the hearing and any further proceeding resulting from such hearing, have all the rights of a State water pollution control agency. Nothing in this subsection shall be construed to modify, amend, repeal, or otherwise affect the provisions of the 1909 Boundary Waters Treaty between Canada and the United States or the Water Utilization Treaty of 1944 between Mexico and the United States (59 Stat. 1219), relative to the control and abatement of pollution in waters covered by those treaties.

Hearing.

36 Stat. 2448.

"(b) The calling of a hearing under this section shall not be construed by the courts, the Administrator, or any person as limiting, modifying, or otherwise affecting the functions and responsibilities of the Administrator under this section to establish and enforce water quality requirements under this Act.

"(c) The Administrator shall publish in the Federal Register a notice of a public hearing before a hearing board of five or more persons appointed by the Administrator. A majority of the members of the board and the chairman who shall be designated by the Administrator shall not be officers or employees of Federal, State, or local governments. On the basis of the evidence presented at such hearing, the board shall within sixty days after completion of the hearing make findings of fact as to whether or not such pollution is occurring and shall thereupon by decision, incorporating its findings therein, make such recommendations to abate the pollution as may be appropriate and shall transmit such decision and the record of the hearings to the Administrator. All such decisions shall be public. Upon receipt of such decision, the Administrator shall promptly implement the board's decision in accordance with the provisions of this Act.

Notice, publication in Federal Register.

14.1-21

"(d) In connection with any hearing called under this subsection, the board is authorized to require any person whose alleged activities result in discharges causing or contributing to pollution to file with it in such forms as it may prescribe, a report based on existing data, furnishing such information as may reasonably be required as to the character, kind, and quantity of such discharges and the use of facilities or other means to prevent or reduce such discharges by the person filing such a report. Such report shall be made under oath or otherwise, as the board may prescribe, and shall be filed with the board within such reasonable period as it may prescribe, unless additional time is granted by it. Upon a showing satisfactory to the board by the person filing such report that such report or portion thereof (other than effluent data), to which the Administrator has access under this section, if made public would divulge trade secrets or secret processes of such person, the board shall consider such report or portion thereof confidential for the purposes of section 1905 of title 18 of the United States Code. If any person required to file any report under this paragraph shall fail to do so within the time fixed by the board for filing the same, and such failure shall continue for thirty days after notice of such default, such person shall forfeit to the United States the sum

Report.

62 Stat. 791.

Penalty.

of $1,000 for each and every day of the continuance of such failure, which forfeiture shall be payable into the Treasury of the United States, and shall be recoverable in a civil suit in the name of the United States in the district court of the United States where such person has his principal office or in any district in which he does business. The Administrator may upon application therefor remit or mitigate any forfeiture provided for under this subsection.

"(e) Board members, other than officers or employees of Federal, State, or local governments, shall be for each day (including travel-time) during which they are performing board business, entitled to receive compensation at a rate fixed by the Administrator but not in excess of the maximum rate of pay for grade GS-18, as provided in the General Schedule under section 5332 of title 5 of the United States Code, and shall, notwithstanding the limitations of sections 5703 and 5704 of title 5 of the United States Code, be fully reimbursed for travel, subsistence, and related expenses.

80 Stat. 499; 83 Stat. 190.

"(f) When any such recommendation adopted by the Administrator involves the institution of enforcement proceedings against any person to obtain the abatement of pollution subject to such recommendation, the Administrator shall institute such proceedings if he believes that the evidence warrants such proceedings. The district court of the United States shall consider and determine de novo all relevant issues, but shall receive in evidence the record of the proceedings before the conference or hearing board. The court shall have jurisdiction to enter such judgment and orders enforcing such judgment as it deems appropriate or to remand such proceedings to the Administrator for such further action as it may direct.

"OIL AND HAZARDOUS SUBSTANCE LIABILITY

"SEC. 311. (a) For the purpose of this section, the term—

Definitions.

"(1) 'oil' means oil of any kind or in any form, including, but not limited to, petroleum, fuel oil, sludge, oil refuse, and oil mixed with wastes other than dredged spoil;

"(2) 'discharge' includes, but is not limited to, any spilling, leaking, pumping, pouring, emitting, emptying or dumping;

"(3) 'vessel' means every description of watercraft or other artificial contrivance used, or capable of being used, as a means of transportation on water other than a public vessel;

"(4) 'public vessel' means a vessel owned or bareboat-chartered and operated by the United States, or by a State or political subdivision thereof, or by a foreign nation, except when such vessel is engaged in commerce;

"(5) 'United States' means the States, the District of Columbia, the Commonwealth of Puerto Rico, the Canal Zone, Guam, American Samoa, the Virgin Islands, and the Trust Territory of the Pacific Islands;

"(6) 'owner or operator' means (A) in the case of a vessel, any person owning, operating, or chartering by demise, such vessel, and (B) in the case of an onshore facility, and an offshore facility, any person owning or operating such onshore facility or offshore facility, and (C) in the case of any abandoned offshore facility, the person who owned or operated such facility immediately prior to such abandonment;

"(7) 'person' includes an individual, firm, corporation, association, and a partnership;

"(8) 'remove' or 'removal' refers to removal of the oil or hazardous substances from the water and shorelines or the taking of

such other actions as may be necessary to minimize or mitigate damage to the public health or welfare, including, but not limited to, fish, shellfish, wildlife, and public and private property, shorelines, and beaches;

"(9) 'contiguous zone' means the entire zone established or to be established by the United States under article 24 of the Convention on the Territorial Sea and the Contiguous Zone;

15 UST 1606.

"(10) 'onshore facility' means any facility (including, but not limited to, motor vehicles and rolling stock) of any kind located in, on, or under, any land within the United States other than submerged land;

"(11) 'offshore facility' means any facility of any kind located in, on, or under, any of the navigable waters of the United States other than a vessel or a public vessel;

"(12) 'act of God' means an act occasioned by an unanticipated grave natural disaster;

"(13) 'barrel' means 42 United States gallons at 60 degrees Fahrenheit;

"(14) 'hazardous substance' means any substance designated pursuant to subsection (b)(2) of this section.

Prohibition.

"(b)(1) The Congress hereby declares that it is the policy of the United States that there should be no discharges of oil or hazardous substances into or upon the navigable waters of the United States, adjoining shorelines, or into or upon the waters of the contiguous zone.

Regulations.

"(2)(A) The Administrator shall develop, promulgate, and revise as may be appropriate, regulations designating as hazardous substances, other than oil as defined in this section, such elements and compounds which, when discharged in any quantity into or upon the navigable waters of the United States or adjoining shorelines or the waters of the contiguous zone, present an imminent and substantial danger to the public health or welfare, including, but not limited to, fish, shellfish, wildlife, shorelines, and beaches.

14.1-22

Hazardous substances, removability determination.

"(B)(i) The Administrator shall include in any designation under subparagraph (A) of this subsection a determination whether any such designated hazardous substance can actually be removed.

"(ii) The owner or operator of any vessel, onshore facility, or offshore facility from which there is discharged during the two-year period beginning on the date of enactment of the Federal Water Pollution Control Act Amendments of 1972, any hazardous substance determined not removable under clause (i) of this subparagraph shall be liable, subject to the defenses to liability provided under subsection (f) of this section, as appropriate, to the United States for a civil penalty per discharge established by the Administrator based on toxicity, degradability, and dispersal characteristics of such substance, in an amount not to exceed $50,000, except that where the United States can show that such discharge was a result of willful negligence or willful misconduct within the privity and knowledge of the owner, such owner or operator shall be liable to the United States for a civil penalty in such amount as the Administrator shall establish, based upon the toxicity, degradability, and dispersal characteristics of such substance.

"(iii) After the expiration of the two-year period referred to in clause (ii) of this subparagraph, the owner or operator of any vessel, onshore facility, or offshore facility, from which there is discharged any hazardous substance determined not removable under clause (i) of this subparagraph shall be liable, subject to the defenses to liability provided in subsection (f) of this section, to the United States for either one or the other of the following penalties, the determination of which shall be in the discretion of the Administrator:

"(aa) a penalty in such amount as the Administrator shall establish, based on the toxicity, degradability, and dispersal characteristics of the substance, but not less than $500 nor more than $5,000; or

"(bb) a penalty determined by the number of units discharged multiplied by the amount established for such unit under clause (iv) of this subparagraph, but such penalty shall not be more than $5,000,000 in the case of a discharge from a vessel and $500,000 in the case of a discharge from an onshore or offshore facility.

"(iv) The Administrator shall establish by regulation, for each hazardous substance designated under subparagraph (A) of this paragraph, and within 180 days of the date of such designation, a unit of measurement based upon the usual trade practice and, for the purpose of determining the penalty under clause (iii)(bb) of this subparagraph, shall establish for each such unit a fixed monetary amount which shall be not less than $100 nor more than $1,000 per unit. He shall establish such fixed amount based on the toxicity, degradability, and dispersal characteristics of the substance.

"(3) The discharge of oil or hazardous substances into or upon the navigable waters of the United States, adjoining shorelines, or into or upon the waters of the contiguous zone in harmful quantities as determined by the President under paragraph (4) of this subsection, is prohibited, except (A) in the case of such discharges of oil into the waters of the contiguous zone, where permitted under article IV of the International Convention for the Prevention of Pollution of the Sea by Oil, 1954, as amended, and (B) where permitted in quantities and at times and locations or under such circumstances or conditions as the President may, by regulation, determine not to be harmful. Any regulations issued under this subsection shall be consistent with maritime safety and with marine and navigation laws and regulations and applicable water quality standards.

12 UST 2989.

Discharges, harmful quantities, determination.

"(4) The President shall by regulation, to be issued as soon as possible after the date of enactment of this paragraph, determine for the purposes of this section, those quantities of oil and any hazardous substance the discharge of which, at such times, locations, circumstances, and conditions, will be harmful to the public health or welfare of the United States, including, but not limited to, fish, shellfish, wildlife, and public and private property, shorelines, and beaches except that in the case of the discharge of oil into or upon the waters of the contiguous zone, only those discharges which threaten the fishery resources of the contiguous zone or threaten to pollute or contribute to the pollution of the territory or the territorial sea of the United States may be determined to be harmful.

Violation notification.

"(5) Any person in charge of a vessel or of an onshore facility or an offshore facility shall, as soon as he has knowledge of any discharge of oil or a hazardous substance from such vessel or facility in violation of paragraph (3) of this subsection, immediately notify the appropriate agency of the United States Government of such discharge. Any such person who fails to notify immediately such agency of such discharge shall, upon conviction, be fined not more than $10,000, or imprisoned for not more than one year, or both. Notification received pursuant to this paragraph or information obtained by the exploitation of such notification shall not be used against any such person in any criminal case, except a prosecution for perjury or for giving a false statement.

Penalty.

"(6) Any owner or operator of any vessel, onshore facility, or offshore facility from which oil or a hazardous substance is discharged in violation of paragraph (3) of this subsection shall be assessed a civil penalty by the Secretary of the department in which the Coast Guard

is operating of not more than $5,000 for each offense. No penalty shall be assessed unless the owner or operator charged shall have been given notice and opportunity for a hearing on such charge. Each violation is a separate offense. Any such civil penalty may be compromised by such Secretary. In determining the amount of the penalty, or the amount agreed upon in compromise, the appropriateness of such penalty to the size of the business of the owner or operator charged, the effect on the owner or operator's ability to continue in business, and the gravity of the violation, shall be considered by such Secretary. The Secretary of the Treasury shall withhold at the request of such Secretary the clearance required by section 4197 of the Revised Statutes of the United States, as amended (46 U.S.C. 91), of any vessel the owner or operator of which is subject to the foregoing penalty. Clearance may be granted in such cases upon the filing of a bond or other surety satisfactory to such Secretary.

Discharge into U.S. navigable waters, removal.

"(c)(1) Whenever any oil or a hazardous substance is discharged, into or upon the navigable waters of the United States, adjoining shorelines, or into or upon the waters of the contiguous zone, the President is authorized to act to remove or arrange for the removal of such oil or substance at any time, unless he determines such removal will be done properly by the owner or operator of the vessel, onshore facility, or offshore facility from which the discharge occurs.

National Contingency Plan.

"(2) Within sixty days after the effective date of this section, the President shall prepare and publish a National Contingency Plan for removal of oil and hazardous substances, pursuant to this subsection. Such National Contingency Plan shall provide for efficient, coordinated, and effective action to minimize damage from oil and hazardous substance discharges, including containment, dispersal, and removal of oil and hazardous substances, and shall include, but not be limited to—

"(A) assignment of duties and responsibilities among Federal departments and agencies in coordination with State and local agencies, including, but not limited to, water pollution control, conservation, and port authorities;

"(B) identification, procurement, maintenance, and storage of equipment and supplies;

"(C) establishment or designation of a strike force consisting of personnel who shall be trained, prepared, and available to provide necessary services to carry out the Plan, including the establishment at major ports, to be determined by the President, of emergency task forces of trained personnel, adequate oil and hazardous substance pollution control equipment and material, and a detailed oil and hazardous substance pollution prevention and removal plan;

"(D) a system of surveillance and notice designed to insure earliest possible notice of discharges of oil and hazardous substances to the appropriate Federal agency;

"(E) establishment of a national center to provide coordination and direction for operations in carrying out the Plan;

"(F) procedures and techniques to be employed in identifying, containing, dispersing, and removing oil and hazardous substances;

"(G) a schedule, prepared in cooperation with the States, identifying (i) dispersants and other chemicals, if any, that may be used in carrying out the Plan, (ii) the waters in which such dispersants and chemicals may be used, and (iii) the quantities of such dispersant or chemical which can be used safely in such waters, which schedule shall provide in the case of any dispersant, chemical, or waters not specifically identified in such schedule that the President, or his delegate, may, on a case-by-case basis, identify the dispersants and other chemicals which may be used, the waters in which they may be used, and the quantities which can be used safely in such waters; and

"(H) a system whereby the State or States affected by a discharge of oil or hazardous substance may act where necessary to remove such discharge and such State or States may be reimbursed from the fund established under subsection (k) of this section for the reasonable costs incurred in such removal.

The President may, from time to time, as he deems advisable revise or otherwise amend the National Contingency Plan. After publication of the National Contingency Plan, the removal of oil and hazardous substances and actions to minimize damage from oil and hazardous substance discharges shall, to the greatest extent possible, be in accordance with the National Contingency Plan.

Maritime disaster discharge.

"(d) Whenever a marine disaster in or upon the navigable waters of the United States has created a substantial threat of a pollution hazard to the public health or welfare of the United States, including, but not limited to, fish, shellfish, and wildlife and the public and private shorelines and beaches of the United States, because of a discharge, or an imminent discharge, of large quantities of oil, or of a hazardous substance from a vessel the United States may (A) coordinate and direct all public and private efforts directed at the removal or elimination of such threat; and (B) summarily remove, and, if necessary, destroy such vessel by whatever means are available without regard to any provisions of law governing the employment of personnel or the expenditure of appropriated funds. Any expense incurred under this subsection shall be a cost incurred by the United States Government for the purposes of subsection (f) in the removal of oil or hazardous substance.

Relief.

"(e) In addition to any other action taken by a State or local government, when the President determines there is an imminent and substantial threat to the public health or welfare of the United States, including, but not limited to, fish, shellfish, and wildlife and public and private property, shorelines, and beaches within the United States, because of an actual or threatened discharge of oil or hazardous substance into or upon the navigable waters of the United States from an onshore or offshore facility, the President may require the United States attorney of the district in which the threat occurs to secure such relief as may be necessary to abate such threat, and the district courts of the United States shall have jurisdiction to grant such relief as the public interest and the equities of the case may require.

Jurisdiction.

Liability.

"(f)(1) Except where an owner or operator can prove that a discharge was caused solely by (A) an act of God, (B) an act of war, (C) negligence on the part of the United States Government, or (D) an act or omission of a third party without regard to whether any such act or omission was or was not negligent, or any combination of the foregoing clauses, such owner or operator of any vessel from which oil or a hazardous substance is discharged in violation of subsection (b)(2) of this section shall, not withstanding any other provision of law, be liable to the United States Government for the actual costs incurred under subsection (c) for the removal of such oil or substance by the United States Government in an amount not to exceed $100 per gross ton of such vessel or $14,000,000, whichever is lesser, except that where the United States can show that such discharge was the result of willful negligence or willful misconduct within the privity and knowledge of the owner, such owner or operator shall be liable to the United States Government for the full amount of such costs. Such costs shall constitute a maritime lien on such vessel which may be recovered in an action in rem in the district court of the United

States for any district within which any vessel may be found. The United States may also bring an action against the owner or operator of such vessel in any court of competent jurisdiction to recover such costs.

"(2) Except where an owner or operator of an onshore facility can prove that a discharge was caused solely by (A) an act of God, (B) an act of war, (C) negligence on the part of the United States Government, or (D) an act or omission of a third party without regard to whether any such act or omission was or was not negligent, or any combination of the foregoing clauses, such owner or operator of any such facility from which oil or a hazardous substance is discharged in violation of subsection (b)(2) of this section shall be liable to the United States Government for the actual costs incurred under subsection (c) for the removal of such oil or substance by the United States Government in an amount not to exceed $8,000,000, except that where the United States can show that such discharge was the result of willful negligence or willful misconduct within the privity and knowledge of the owner, such owner or operator shall be liable to the United States Government for the full amount of such costs. The United States may bring an action against the owner or operator of such facility in any court of competent jurisdiction to recover such costs. The Secretary is authorized, by regulation, after consultation with the Secretary of Commerce and the Small Business Administration, to establish reasonable and equitable classifications of those onshore facilities having a total fixed storage capacity of 1,000 barrels or less which he determines because of size, type, and location do not present a substantial risk of the discharge of oil or a hazardous substance in violation of subsection (b)(2) of this section, and apply with respect to such classifications differing limits of liability which may be less than the amount contained in this paragraph.

"(3) Except where an owner or operator of an offshore facility can prove that a discharge was caused solely by (A) an act of God, (B) an act of war, (C) negligence on the part of the United States Government, or (D) an act or omission of a third party without regard to whether any such act or omission was or was not negligent, or any combination of the foregoing clauses, such owner or operator of any such facility from which oil or a hazardous substance is discharged in violation of subsection (b)(2) of this section shall, notwithstanding any other provision of law, be liable to the United States Government for the actual costs incurred under subsection (c) for the removal of such oil or substance by the United States Government in an amount not to exceed $8,000,000, except that where the United States can show that such discharge was the result of willful negligence or willful misconduct within the privity and knowledge of the owner, such owner or operator shall be liable to the United States Government for the full amount of such costs. The United States may bring an action against the owner or operator of such a facility in any court of competent jurisdiction to recover such costs.

"(g) In any case where an owner or operator of a vessel, of an onshore facility, or of an offshore facility, from which oil or a hazardous substance is discharged in violation of subsection (b)(2) of this section, proves that such discharge of oil or hazardous substance was caused solely by an act or omission of a third party, or was caused solely by such an act or omission in combination with an act of God, an act of war, or negligence on the part of the United States Government, such third party shall, notwithstanding any other provision of law, be liable to the United States Government for the actual costs incurred under subsection (c) for removal of such oil or substance by the United States Government, except where such third party can

prove that such discharge was caused solely by (A) an act of God, (B) an act of war, (C) negligence on the part of the United States Government, or (D) an act or omission of another party without regard to whether such act or omission was or was not negligent, or any combination of the foregoing clauses. If such third party was the owner or operator of a vessel which caused the discharge of oil or a hazardous substance in violation of subsection (b)(2) of this section, the liability of such third party under this subsection shall not exceed $100 per gross ton of such vessel or $14,000,000, whichever is the lesser. In any other case the liability of such third party shall not exceed the limitation which would have been applicable to the owner or operator of the vessel or the onshore or offshore facility from which the discharge actually occurred if such owner or operator were liable. If the United States can show that the discharge of oil or a hazardous substance in violation of subsection (b)(2) of this section was the result of willful negligence or willful misconduct within the privity and knowledge of such third party, such third party shall be liable to the United States Government for the full amount of such removal costs. The United States may bring an action against the third party in any court of competent jurisdiction to recover such removal costs.

"(h) The liabilities established by this section shall in no way affect any rights which (1) the owner or operator of a vessel or of an onshore facility or an offshore facility may have against any third party whose acts may in any way have caused or contributed to such discharge, or (2) The United States Government may have against any third party whose actions may in any way have caused or contributed to the discharge of oil or hazardous substance.

Removal costs, recovery.

"(i)(1) In any case where an owner or operator of a vessel or an onshore facility or an offshore facility from which oil or a hazardous substance is discharged in violation of subsection (b)(2) of this section acts to remove such oil or substance in accordance with regulations promulgated pursuant to this section, such owner or operator shall be entitled to recover the reasonable costs incurred in such removal upon establishing, in a suit which may be brought against the United States Government in the United States Court of Claims, that such discharge was caused solely by (A) an act of God, (B) an act of war, (C) negligence on the part of the United States Government, or (D) an act or omission of a third party without regard to whether such act or omission was or was not negligent, or of any combination of the foregoing causes.

"(2) The provisions of this subsection shall not apply in any case where liability is established pursuant to the Outer Continental Shelf Lands Act.

67 Stat. 462. 43 USC 1331 note.

"(3) Any amount paid in accordance with a judgment of the United States Court of Claims pursuant to this section shall be paid from the funds established pursuant to subsection (k).

Regulations.

"(j)(1) Consistent with the National Contingency Plan required by subsection (c)(2) of this section, as soon as practicable after the effective date of this section, and from time to time thereafter, the President shall issue regulations consistent with maritime safety and with marine and navigation laws (A) establishing methods and procedures for removal of discharged oil and hazardous substances, (B) establishing criteria for the development and implementation of local and regional oil and hazardous substance removal contingency plans, (C) establishing procedures, methods, and equipment and other requirements for equipment to prevent discharges of oil and hazardous substances from vessels and from onshore facilities and offshore facilities, and to contain such discharges, and (D) governing the inspection of vessels carrying cargoes of oil and hazardous substances

and the inspection of such cargoes in order to reduce the likelihood of discharges of oil from vessels in violation of this section.

Penalty.

"(2) Any owner or operator of a vessel or an onshore facility or an offshore facility and any other person subject to any regulation issued under paragraph (1) of this subsection who fails or refuses to comply with the provisions of any such regulations, shall be liable to a civil penalty of not more than $5,000 for each such violation. Each violation shall be a separate offense. The President may assess and compromise such penalty. No penalty shall be assessed until the owner, operator, or other person charged shall have been given notice and an opportunity for a hearing on such charge. In determining the amount of the penalty, or the amount agreed upon in compromise, the gravity of the violation, and the demonstrated good faith of the owner, operator, or other person charged in attemping to achieve rapid compliance, after notification of a violation, shall be considered by the President.

Appropriation.

"(k) There is hereby authorized to be appropriated to a revolving fund to be established in the Treasury not to exceed $35,000,000 to carry out the provisions of subsections (c), (d), (i), and (l) of this section. Any other funds received by the United States under this section shall also be deposited in said fund for such purposes. All sums appropriated to, or deposited in, said fund shall remain available until expended.

Administration.

"(l) The President is authorized to delegate the administration of this section to the heads of those Federal departments, agencies, and instrumentalities which he determines to be appropriate. Any moneys in the fund established by subsection (k) of this section shall be available to such Federal departments, agencies, and instrumentalities to carry out the provisions of subsections (c) and (i) of this section. Each such department, agency, and instrumentality, in order to avoid duplication of effort, shall, whenever appropriate, utilize the personnel, services, and facilities of other Federal departments, agencies, and instrumentalities.

14.1-25

"(m) Anyone authorized by the President to enforce the provisions of this section may, except as to public vessels, (A) board and inspect any vessel upon the navigable waters of the United States or the waters of the contiguous zone, (B) with or without a warrant arrest any person who violates the provisions of this section or any regulation issued thereunder in his presence or view, and (C) execute any warrant or other process issued by an officer or court of competent jurisdiction.

Jurisdiction.

"(n) The several district courts of the United States are invested with jurisdiction for any actions, other than actions pursuant to subsection (i)(1), arising under this section. In the case of Guam and the Trust Territory of the Pacific Islands, such actions may be brought in the district court of Guam, and in the case of the Virgin Islands such actions may be brought in the district court of the Virgin Islands. In the case of American Samoa and the Trust Territory of the Pacific Islands, such actions may be brought in the District Court of the United States for the District of Hawaii and such court shall have jurisdiction of such actions. In the case of the Canal Zone, such actions may be brought in the United States District Court for the District of the Canal Zone.

"(o)(1) Nothing in this section shall affect or modify in any way the obligations of any owner or operator of any vessel, or of any owner or operator of any onshore facility or offshore facility to any person or agency under any provision of law for damages to any publicly owned or privately owned property resulting from a discharge of any oil or hazardous substance or from the removal of any such oil or hazardous substance.

"(2) Nothing in this section shall be construed as preempting any State or political subdivision thereof from imposing any requirement or liability with respect to the discharge of oil or hazardous substance into any waters within such State.

"(3) Nothing in this section shall be construed as affecting or modifying any other existing authority of any Federal department, agency, or instrumentality, relative to onshore or offshore facilities under this Act or any other provision of law, or to affect any State or local law not in conflict with this section.

Certain vessels, financial responsibility.

"(p)(1) Any vessel over three hundred gross tons, including any barge of equivalent size, but not including any barge that is not self-propelled and that does not carry oil or hazardous substances as cargo or fuel, using any port or place in the United States or the navigable waters of the United States for any purpose shall establish and maintain under regulations to be prescribed from time to time by the President, evidence of financial responsibility of $100 per gross ton, or $14,000,000 whichever is the lesser, to meet the liability to the United States which such vessel could be subjected under this section. In cases where an owner or operator owns, operates, or charters more than one such vessel, financial responsibility need only be established to meet the maximum liability to which the largest of such vessels could be subjected. Financial responsibility may be established by any one of, or a combination of, the following methods acceptable to the President: (A) evidence of insurance, (B) surety bonds, (C) qualification as a self-insurer, or (D) other evidence of financial responsibility. Any bond filed shall be issued by a bonding company authorized to do business in the United States.

Effective date.

"(2) The provisions of paragraph (1) of this subsection shall be effective April 3, 1971, with respect to oil and one year after the date of enactment of this section with respect to hazardous substances. The President shall delegate the responsibility to carry out the provisions of this subsection to the appropriate agency head within sixty days after the date of enactment of this section. Regulations necessary to implement this subsection shall be issued within six months after the date of enactment of this section.

"(3) Any claim for costs incurred by such vessel may be brought directly against the insurer or any other person providing evidence of financial responsibility as required under this subsection. In the case of any action pursuant to this subsection such insurer or other person shall be entitled to invoke all rights and defenses which would have been available to the owner or operator if an action had been brought against him by the claimant, and which would have been available to him if an action had been brought against him by the owner or operator.

Penalty.

"(4) Any owner or operator of a vessel subject to this subsection, who fails to comply with the provisions of this subsection or any regulation issued thereunder, shall be subject to a fine of not more than $10,000.

46 USC 91.

"(5) The Secretary of the Treasury may refuse the clearance required by section 4197 of the Revised Statutes of the United States, as amended (4 U.S.C. 91), to any vessel subject to this subsection, which does not have evidence furnished by the President that the financial responsibility provisions of paragraph (1) of this subsection have been complied with.

"(6) The Secretary of the Department in which the Coast Guard is operated may (A) deny entry to any port or place in the United States or the navigable waters of the United States, to, and (B) detain at the port or place in the United States from which it is about to depart for any other port or place in the United States, any vessel sub-

"FEDERAL FACILITIES POLLUTION CONTROL

"SEC. 313. Each department, agency, or instrumentality of the executive, legislative, and judicial branches of the Federal Government (1) having jurisdiction over any property or facility, or (2) engaged in any activity resulting, or which may result, in the discharge or runoff of pollutants shall comply with Federal, State, interstate, and local requirements respecting control and abatement of pollution to the same extent that any person is subject to such requirements, including the payment of reasonable service charges. The President may exempt any effluent source of any department, agency, or instrumentality in the executive branch from compliance with any such a requirement if he determines it to be in the paramount interest of the United States to do so; except that no exemption may be granted from the requirements of section 306 or 307 of this Act. No such exemptions shall be granted due to lack of appropriation unless the President shall have specifically requested such appropriation as a part of the budgetary process and the Congress shall have failed to make available such requested appropriation. Any exemption shall be for a period not in excess of one year, but additional exemptions may be granted for periods of not to exceed one year upon the President's making a new determination. The President shall report each January to the Congress all exemptions from the requirements of this section granted during the preceding calendar year, together with his reason for granting such exemption.

Exemption.

Report to Congress.

"CLEAN LAKES

"SEC. 314. (a) Each State shall prepare or establish, and submit to the Administrator for his approval—

"(1) an identification and classification according to eutrophic condition of all publicly owned fresh water lakes in such State;

"(2) procedures, processes, and methods (including land use requirements), to control sources of pollution of such lakes; and

"(3) methods and procedures, in conjunction with appropriate Federal agencies, to restore the quality of such lakes.

"(b) The Administrator shall provide financial assistance to States in order to carry out methods and procedures approved by him under this section.

"(c)(1) The amount granted to any State for any fiscal year under this section shall not exceed 70 per centum of the funds expended by such State in such year for carrying out approved methods and procedures under this section.

"(2) There is authorized to be appropriated $50,000,000 for the fiscal year ending June 30, 1973; $100,000,000 for the fiscal year 1974; and $150,000,000 for the fiscal year 1975 for grants to States under this section which such sums shall remain available until expended. The Administrator shall provide for an equitable distribution of such sums to the States with approved methods and procedures under this section.

Appropriations.

"NATIONAL STUDY COMMISSION

"SEC. 315. (a) There is established a National Study Commission, which shall make a full and complete investigation and study of all of the technological aspects of achieving, and all aspects of the total economic, social, and environmental effects of achieving or not achieving, the effluent limitations and goals set forth for 1983 in section 301(b)(2) of this Act.

Establishment.

"(b) Such Commission shall be composed of fifteen members, including five members of the Senate, who are members of the Public Works committee, appointed by the President of the Senate, five members of the House, who are members of the Public Works committee, appointed by the Speaker of the House, and five members of the public appointed by the President. The Chairman of such Commission shall be elected from among its members.

"(c) In the conduct of such study, the Commission is authorized to contract with the National Academy of Sciences and the National Academy of Engineering (acting through the National Research Council), the National Institute of Ecology, Brookings Institution, and other nongovernmental entities, for the investigation of matters within their competence.

Contract authority.

"(d) The heads of the departments, agencies and instrumentalities of the executive branch of the Federal Government shall cooperate with the Commission in carrying out the requirements of this section, and shall furnish to the Commission such information as the Commission deems necessary to carry out this section.

"(e) A report shall be submitted to the Congress of the results of such investigation and study, together with recommendations, not later than three years after the date of enactment of this title.

Report to Congress.

"(f) The members of the Commission who are not officers or employees of the United States, while attending conferences or meetings of the Commission or while otherwise serving at the request of the Chairman shall be entitled to receive compensation at a rate not in excess of the maximum rate of pay for grade GS-18, as provided in the General Schedule under section 5332 of title V of the United States Code, including traveltime and while away from their homes or regular places of business they may be allowed travel expenses, including per diem in lieu of subsistence as authorized by law (5 U.S.C. 73b-2) for persons in the Government service employed intermittently.

5 USC 5703 and note.

"(g) There is authorized to be appropriated, for use in carrying out this section, not to exceed $15,000,000.

Appropriation.

"THERMAL DISCHARGES

"SEC. 316. (a) With respect to any point source otherwise subject to the provisions of section 301 or section 306 of this Act, whenever the owner or operator of any such source, after opportunity for public hearing, can demonstrate to the satisfaction of the Administrator (or, if appropriate, the State) that any effluent limitation proposed for the control of the thermal component of any discharge from such source will require effluent limitations more stringent than necessary to assure the projection and propagation of a balanced, indigenous population of shellfish, fish, and wildlife in and on the body of water into which the discharge is to be made, the Administrator (or, if appropriate, the State) may impose an effluent limitation under such sections for such plant, with respect to the thermal component of such discharge (taking into account the interaction of such thermal component with other pollutants), that will assure the protection and propagation of a balanced, indigenous population of shellfish, fish, and wildlife in and on that body of water.

"(b) Any standard established pursuant to section 301 or section 306 of this Act and applicable to a point source shall require that the location, design, construction, and capacity of cooling water intake structures reflect the best technology available for minimizing adverse environmental impact.

"(c) Notwithstanding any other provision of this Act, any point source of a discharge having a thermal component, the modification of which point source is commenced after the date of enactment of the Federal Water Pollution Control Act Amendments of 1972 and which, as modified, meets effluent limitations established under section 301 or, if more stringent, effluent limitations established under

section 303 and which effluent limitations will assure protection and propagation of a balanced, indigenous population of shellfish, fish, and wildlife in or on the water into which the discharge is made, shall not be subject to any more stringent effluent limitation with respect to the thermal component of its discharge during a ten year period beginning on the date of completion of such modification or during the period of depreciation or amortization of such facility for the purpose of section 167 or 169 (or both) of the Internal Revenue Code of 1954, whichever period ends first.

68A Stat. 51; 85 Stat. 508. 83 Stat. 667. 26 USC 167, 169.

"FINANCING STUDY

"SEC. 317. (a) The Administrator shall continue to investigate and study the feasibility of alternate methods of financing the cost of preventing, controlling and abating pollution as directed in the Water Quality Improvement Act of 1970 (Public Law 91-224), including, but not limited to, the feasibility of establishing a pollution abatement trust fund. The results of such investigation and study shall be reported to the Congress not later than two years after enactment of this title, together with recommendations of the Administrator for financing the programs for preventing, controlling and abating pollution for the fiscal years beginning after fiscal year 1976, including any necessary legislation.

84 Stat. 91. 33 USC 1151 note. Report to Congress.

"(b) There is authorized to be appropriated for use in carrying out this section, not to exceed $1,000,000.

Appropriation.

"AQUACULTURE

"SEC. 318. (a) The Administrator is authorized, after public hearings, to permit the discharge of a specific pollutant or pollutants under controlled conditions associated with an approved aquaculture project under Federal or State supervision.

"(b) The Administrator shall by regulation, not later than January 1, 1974, establish any procedures and guidelines he deems necessary to carry out this section.

14.1-27

"TITLE IV—PERMITS AND LICENSES

"CERTIFICATION

"SEC. 401. (a)(1) Any applicant for a Federal license or permit to conduct any activity including, but not limited to, the construction or operation of facilities, which may result in any discharge into the navigable waters, shall provide the licensing or permitting agency a certification from the State in which the discharge originates or will originate, or, if appropriate, from the interstate water pollution control agency having jurisdiction over the navigable waters at the point where the discharge originates or will originate, that any such discharge will comply with the applicable provisions of sections 301, 302, 306, and 307 of this Act. In the case of any such activity for which there is not an applicable effluent limitation or other limitation under sections 301(b) and 302, and there is not an applicable standard under sections 306 and 307, the State shall so certify, except that any such certification shall not be deemed to satisfy section 511(c) of this Act. Such State or interstate agency shall establish procedures for public notice in the case of all applications for certification by it and, to the extent it deems appropriate, procedures for public hearings in connection with specific applications. In any case where a State or interstate agency has no authority to give such a certification, such certification shall be from the Administrator. If the State, interstate

agency, or Administrator, as the case may be, fails or refuses to act on a request for certification, within a reasonable period of time (which shall not exceed one year) after receipt of such request, the certification requirements of this subsection shall be waived with respect to such Federal application. No license or permit shall be granted until the certification required by this section has been obtained or has been waived as provided in the preceding sentence. No license or permit shall be granted if certification has been denied by the State, interstate agency, or the Administrator, as the case may be.

"(2) Upon receipt of such application and certification the licensing or permitting agency shall immediately notify the Administrator of such application and certification. Whenever such a discharge may affect, as determined by the Administrator, the quality of the waters of any other State, the Administrator within thirty days of the date of notice of application for such Federal license or permit shall so notify such other State, the licensing or permitting agency, and the applicant. If, within sixty days after receipt of such notification, such other State determines that such discharge will affect the quality of its waters so as to violate any water quality requirement in such State, and within such sixty-day period notifies the Administrator and the licensing or permitting agency in writing of its objection to the issuance of such license or permit and requests a public hearing on such objection, the licensing or permitting agency shall hold such a hearing. The Administrator shall at such hearing submit his evaluation and recommendations with respect to any such objection to the licensing or permitting agency. Such agency, based upon the recommendations of such State, the Administrator, and upon any additional evidence, if any, presented to the agency at the hearing, shall condition such license or permit in such manner as may be necessary to insure compliance with applicable water quality requirements. If the imposition of conditions cannot insure such compliance such agency shall not issue such license or permit.

"(3) The certification obtained pursuant to paragraph (1) of this subsection with respect to the construction of any facility shall fulfill the requirements of this subsection with respect to certification in connection with any other Federal license or permit required for the operation of such facility unless, after notice to the certifying State, agency, or Administrator, as the case may be, which shall be given by the Federal agency to whom application is made for such operating license or permit, the State, or if appropriate, the interstate agency or the Administrator, notifies such agency within sixty days after receipt of such notice that there is no longer reasonable assurance that there will be compliance with the applicable provisions of sections 301, 302, 306, and 307 of this Act because of changes since the construction license or permit certification was issued in (A) the construction or operation of the facility, (B) the characteristics of the waters into which such discharge is made, (C) the water quality criteria applicable to such waters or (D) applicable effluent limitations or other requirements. This paragraph shall be inapplicable in any case where the applicant for such operating license or permit has failed to provide the certifying State, or, if appropriate, the interstate agency or the Administrator, with notice of any proposed changes in the construction or operation of the facility with respect to which a construction license or permit has been granted, which changes may result in violation of section 301, 302, 306, or 307 of this Act.

License suspension.

"(4) Prior to the initial operation of any federally licensed or permitted facility or activity which may result in any discharge into the navigable waters and with respect to which a certification has been obtained pursuant to paragraph (1) of this subsection, which facility or activity is not subject to a Federal operating license or permit, the licensee or permittee shall provide an opportunity for such certifying State, or, if appropriate, the interstate agency or the Administrator to review the manner in which the facility or activity shall be operated or conducted for the purposes of assuring that applicable effluent limitations or other limitations or other applicable water quality requirements will not be violated. Upon notification by the certifying State, or if appropriate, the interstate agency or the Administrator that the operation of any such federally licensed or permitted facility or activity will violate applicable effluent limitations or other limitations or other water quality requirements such Federal agency may, after public hearing, suspend such license or permit. If such license or permit is suspended, it shall remain suspended until notification is received from the certifying State, agency, or Administrator, as the case may be, that there is reasonable assurance that such facility or activity will not violate the applicable provisions of section 301, 302, 306, or 307 of this Act.

"(5) Any Federal license or permit with respect to which a certification has been obtained under paragraph (1) of this subsection may be suspended or revoked by the Federal agency issuing such license or permit upon the entering of a judgment under this Act that such facility or activity has been operated in violation of the applicable provisions of section 301, 302, 306, or 307 of this Act.

"(6) No Federal agency shall be deemed to be an applicant for the purposes of this subsection.

"(7) Except with respect to a permit issued under section 402 of this Act, in any case where actual construction of a facility has been lawfully commenced prior to April 3, 1970, no certification shall be required under this subsection for a license or permit issued after April 3, 1970, to operate such facility, except that any such license or permit issued without certification shall terminate April 3, 1973, unless prior to such termination date the person having such license or permit submits to the Federal agency which issued such license or permit a certification and otherwise meets the requirements of this section.

"(b) Nothing in this section shall be construed to limit the authority of any department or agency pursuant to any other provision of law to require compliance with any applicable water quality requirements. The Administrator shall, upon the request of any Federal department or agency, or State or interstate agency, or applicant, provide, for the purpose of this section, any relevant information on applicable effluent limitations, or other limitations, standards, regulations, or requirements, or water quality criteria, and shall, when requested by any such department or agency or State or interstate agency, or applicant, comment on any methods to comply with such limitations, standards, regulations, requirements, or criteria.

"(c) In order to implement the provisions of this section, the Secretary of the Army, acting through the Chief of Engineers, is authorized, if he deems it to be in the public interest, to permit the use of spoil disposal areas under his jurisdiction by Federal licensees or permittees, and to make an appropriate charge for such use. Moneys received from such licensees or permittees shall be deposited in the Treasury as miscellaneous receipts.

"(d) Any certification provided under this section shall set forth any effluent limitations and other limitations, and monitoring requirements necessary to assure that any applicant for a Federal license or permit will comply with any applicable effluent limitations and other limitations, under section 301 or 302 of this Act, standard of performance under section 306 of this Act, or prohibition, effluent standard, or pretreatment standard under section 307 of this Act, and with any other appropriate requirement of State law set forth in such certification, and shall become a condition on any Federal license or permit subject to the provisions of this section.

"NATIONAL POLLUTANT DISCHARGE ELIMINATION SYSTEM

Permits, issuance.

"SEC. 402. (a)(1) Except as provided in sections 318 and 404 of this Act, the Administrator may, after opportunity for public hearing, issue a permit for the discharge of any pollutant, or combination of pollutants, notwithstanding section 301(a), upon condition that such discharge will meet either all applicable requirements under sections 301, 302, 306, 307, 308, and 403 of this Act, or prior to the taking of necessary implementing actions relating to all such requirements, such conditions as the Administrator determines are necessary to carry out the provisions of this Act.

"(2) The Administrator shall prescribe conditions for such permits to assure compliance with the requirements of paragraph (1) of this subsection, including conditions on data and information collection, reporting, and such other requirements as he deems appropriate.

"(3) The permit program of the Administrator under paragraph (1) of this subsection, and permits issued thereunder, shall be subject to the same terms, conditions, and requirements as apply to a State permit program and permits issued thereunder under subsection (b) of this section.

30 Stat. 1152. 33 USC 407.

"(4) All permits for discharges into the navigable waters issued pursuant to section 13 of the Act of March 3, 1899, shall be deemed to be permits issued under this title, and permits issued under this title shall be deemed to be permits issued under section 13 of the Act of March 3, 1899, and shall continue in force and effect for their term unless revoked, modified, or suspended in accordance with the provisions of this Act.

"(5) No permit for a discharge into the navigable waters shall be issued under section 13 of the Act of March 3, 1899, after the date of enactment of this title. Each application for a permit under section 13 of the Act of March 3, 1899, pending on the date of enactment of this Act shall be deemed to be an application for a permit under this section. The Administrator shall authorize a State, which he determines has the capability of administering a permit program which will carry out the objective of this Act, to issue permits for discharges into the navigable waters within the jurisdiction of such State. The Administrator may exercise the authority granted him by the preceding sentence only during the period which begins on the date of enactment of this Act and ends either on the ninetieth day after the date of the first promulgation of guidelines required by section 304 (h)(2) of this Act, or the date of approval by the Administrator of a permit program for such State under subsection (b) of this section, whichever date first occurs, and no such authorization to a State shall extend beyond the last day of such period. Each such permit shall be subject to such conditions as the Administrator determines are necessary to carry out the provisions of this Act. No such permit shall issue if the Administrator objects to such issuance.

State permit programs.

"(b) At any time after the promulgation of the guidelines required by subsection (h)(2) of section 304 of this Act, the Governor of each State desiring to administer its own permit program for discharges

into navigable waters within its jurisdiction may submit to the Administrator a full and complete description of the program it proposes to establish and administer under State law or under an interstate compact. In addition, such State shall submit a statement from the attorney general (or the attorney for those State water pollution control agencies which have independent legal counsel), or from the chief legal officer in the case of an interstate agency, that the laws of such State, or the interstate compact, as the case may be, provide adequate authority to carry out the described program. The Administrator shall approve each such submitted program unless he determines that adequate authority does not exist:

Approval conditions.

"(1) To issue permits which—

"(A) apply, and insure compliance with, any applicable requirements of sections 301, 302, 306, 307, and 403;

"(B) are for fixed terms not exceeding five years; and

"(C) can be terminated or modified for cause including, but not limited to, the following:

"(i) violation of any condition of the permit;

"(ii) obtaining a permit by misrepresentation, or failure to disclose fully all relevant facts;

"(iii) change in any condition that requires either a temporary or permanent reduction or elimination of the permitted discharge;

"(D) control the disposal of pollutants into wells;

"(2)(A) To issue permits which apply, and insure compliance with, all applicable requirements of section 308 of this Act, or

"(B) To inspect, monitor, enter, and require reports to at least the same extent as required in section 308 of this Act;

"(3) To insure that the public, and any other State the waters of which may be affected, receive notice of each application for a permit and to provide an opportunity for public hearing before a ruling on each such application;

"(4) To insure that the Administrator receives notice of each application (including a copy thereof) for a permit;

"(5) To insure that any State (other than the permitting State), whose waters may be affected by the issuance of a permit may submit written recommendations to the permitting State (and the Administrator) with respect to any permit application and, if any part of such written recommendations are not accepted by the permitting State, that the permitting State will notify such affected State (and the Administrator) in writing of its failure to so accept such recommendations together with its reasons for so doing;

"(6) To insure that no permit will be issued if, in the judgment of the Secretary of the Army acting through the Chief of Engineers, after consultation with the Secretary of the department in which the Coast Guard is operating, anchorage and navigation of any of the navigable waters would be substantially impaired thereby;

"(7) To abate violations of the permit or the permit program, including civil and criminal penalties and other ways and means of enforcement;

"(8) To insure that any permit for a discharge from a publicly owned treatment works includes conditions to require adequate notice to the permitting agency of (A) new introductions into such works of pollutants from any source which would be a new source as defined in section 306 if such source were discharging pollutants, (B) new introductions of pollutants into such works from a source which would be subject to section 301 if it were discharging such pollutants, or (C) a substantial change in volume or character of pollutants being introduced into such works by a source introducing pollutants into

such works at the time of issuance of the permit. Such notice shall include information on the quality and quantity of effluent to be introduced into such treatment works and any anticipated impact of such change in the quantity or quality of effluent to be discharged from such publicly owned treatment works; and

"(9) To insure that any industrial user of any publicly owned treatment works will comply with sections 204(b), 307, and 308.

"(c)(1) Not later than ninety days after the date on which a State has submitted a program (or revision thereof) pursuant to subsection (b) of this section, the Administrator shall suspend the issuance of permits under subsection (a) of this section as to those navigable waters subject to such program unless he determines that the State permit program does not meet the requirements of subsection (b) of this section or does not conform to the guidelines issued under section 304(h)(2) of this Act. If the Administrator so determines, he shall notify the State of any revisions or modifications necessary to conform to such requirements or guidelines.

"(2) Any State permit program under this section shall at all times be in accordance with this section and guidelines promulgated pursuant to section 304(h)(2) of this Act.

State permit program, approval withdrawal.

"(3) Whenever the Administrator determines after public hearing that a State is not administering a program approved under this section in accordance with requirements of this section, he shall so notify the State and, if appropriate corrective action is not taken within a reasonable time, not to exceed ninety days, the Administrator shall withdraw approval of such program. The Administrator shall not withdraw approval of any such program unless he shall first have notified the State, and made public, in writing, the reasons for such withdrawal.

Administrator, notification.

"(d)(1) Each State shall transmit to the Administrator a copy of each permit application received by such State and provide notice to the Administrator of every action related to the consideration of such permit application, including each permit proposed to be issued by such State.

"(2) No permit shall issue (A) if the Administrator within ninety days of the date of his notification under subsection (b)(5) of this section objects in writing to the issuance of such permit, or (B) if the Administrator within ninety days of the date of transmittal of the proposed permit by the State objects in writing to the issuance of such permit as being outside the guidelines and requirements of this Act.

Waiver authority.

"(3) The Administrator may, as to any permit application, waive paragraph (2) of this subsection.

"(e) In accordance with guidelines promulgated pursuant to subsection (h)(2) of section 304 of this Act, the Administrator is authorized to waive the requirements of subsection (d) of this section at the time he approves a program pursuant to subsection (b) of this section for any category (including any class, type, or size within such category) of point sources within the State submitting such program.

Point sources, categories.

"(f) The Administrator shall promulgate regulations establishing categories of point sources which he determines shall not be subject to the requirements of subsection (d) of this section in any State with a program approved pursuant to subsection (b) of this section. The Administrator may distinguish among classes, types, and sizes within any category of point sources.

"(g) Any permit issued under this section for the discharge of pollutants into the navigable waters from a vessel or other floating craft shall be subject to any applicable regulations promulgated by the Secretary of the department in which the Coast Guard is operating,

establishing specifications for safe transportation, handling, carriage, storage, and stowage of pollutants.

"(h) In the event any condition of a permit for discharges from a treatment works (as defined in section 212 of this Act) which is publicly owned is violated, a State with a program approved under subsection (b) of this section or the Administrator, where no State program is approved, may proceed in a court of competent jurisdiction to restrict or prohibit the introduction of any pollutant into such treatment works by a source not utilizing such treatment works prior to the finding that such condition was violated.

"(i) Nothing in this section shall be construed to limit the authority of the Administrator to take action pursuant to section 309 of this Act.

Public information.

"(j) A copy of each permit application and each permit issued under this section shall be available to the public. Such permit application or permit, or portion thereof, shall further be available on request for the purpose of reproduction.

"(k) Compliance with a permit issued pursuant to this section shall be deemed compliance, for purposes of sections 309 and 505, with sections 301, 302, 306, 307, and 403, except any standard imposed under section 307 for a toxic pollutant injurious to human health. Until December 31, 1974, in any case where a permit for discharge has been applied for pursuant to this section, but final administrative disposition of such application has not been made, such discharge shall not be a violation of (1) section 301, 306, or 402 of this Act, or (2) section 13 of the Act of March 3, 1899, unless the Administrator or other plaintiff proves that final administrative disposition of such application has not been made because of the failure of the applicant to furnish information reasonably required or requested in order to process the application. For the 180-day period beginning on the date of enactment of the Federal Water Pollution Control Act Amendments of 1972, in the case of any point source discharging any pollutant or combination of pollutants immediately prior to such date of enactment which source is not subject to section 13 of the Act of March 3, 1899, the discharge by such source shall not be a violation of this Act if such a source applies for a permit for discharge pursuant to this section within such 180-day period.

30 Stat. 1152. 33 USC 407.

Ante, p. 816.

14.1-30

"OCEAN DISCHARGE CRITERIA

"SEC. 403. (a) No permit under section 402 of this Act for a discharge into the territorial sea, the waters of the contiguous zone, or the oceans shall be issued, after promulgation of guidelines established under subsection (c) of this section, except in compliance with such guidelines. Prior to the promulgation of such guidelines, a permit may be issued under such section 402 if the Administrator determines it to be in the public interest.

"(b) The requirements of subsection (d) of section 402 of this Act may not be waived in the case of permits for discharges into the territorial sea.

Guidelines.

"(c)(1) The Administrator shall, within one hundred and eighty days after enactment of this Act (and from time to time thereafter), promulgate guidelines for determining the degradation of the waters of the territorial seas, the contiguous zone, and the oceans, which shall include:

"(A) the effect of disposal of pollutants on human health or welfare, including but not limited to plankton, fish, shellfish, wildlife, shorelines, and beaches;

"(B) the effect of disposal of pollutants on marine life including the transfer, concentration, and dispersal of pollutants or their

byproducts through biological, physical, and chemical processes; changes in marine ecosystem diversity, productivity, and stability; and species and community population changes;

"(C) the effect of disposal, of pollutants on esthetic, recreation, and economic values;

"(D) the persistence and permanence of the effects of disposal of pollutants;

"(E) the effect of the disposal at varying rates, of particular volumes and concentrations of pollutants;

"(F) other possible locations and methods of disposal or recycling of pollutants including land-based alternatives; and

"(G) the effect on alternate uses of the oceans, such as mineral exploitation and scientific study.

Prohibition.

"(2) In any event where insufficient information exists on any proposed discharge to make a reasonable judgment on any of the guidelines established pursuant to this subsection no permit shall be issued under section 402 of this Act.

"PERMITS FOR DREDGED OR FILL MATERIAL

Notice, hearing opportunity.

"SEC. 404. (a) The Secretary of the Army, acting through the Chief of Engineers, may issue permits, after notice and opportunity for public hearings for the discharge of dredged or fill material into the navigable waters at specified disposal sites.

"(b) Subject to subsection (c) of this section, each such disposal site shall be specified for each such permit by the Secretary of the Army (1) through the application of guidelines developed by the Administrator, in conjunction with the Secretary of the Army, which guidelines shall be based upon criteria comparable to the criteria applicable to the territorial seas, the contiguous zone, and the ocean under section 403(c), and (2) in any case where such guidelines under clause (1) alone would prohibit the specification of a site, through the application additionally of the economic impact of the site on navigation and anchorage.

Disposal site, specification prohibition.

"(c) The Administrator is authorized to prohibit the specification (including the withdrawal of specification) of any defined area as a disposal site, and he is authorized to deny or restrict the use of any defined area for specification (including the withdrawal of specification) as a disposal site, whenever he determines, after notice and opportunity for public hearings, that the discharge of such materials into such area will have an unacceptable adverse effect on municipal water supplies, shellfish beds and fishery areas (including spawning and breeding areas), wildlife, or recreational areas. Before making such determination, the Administrator shall consult with the Secretary of the Army. The Administrator shall set forth in writing and make public his findings and his reasons for making any determination under this subsection.

Findings of Administrator, publication.

"DISPOSAL OF SEWAGE SLUDGE

"SEC. 405. (a) Notwithstanding any other provision of this Act or of any other law, in any case where the disposal of sewage sludge resulting from the operation of a treatment works as defined in section 212 of this Act (including the removal of in-place sewage sludge from one location and its deposit at another location) would result in any pollutant from such sewage sludge entering the navigable waters, such disposal is prohibited except in accordance with a permit issued by the Administrator under this section.

Permits, issuance, regulations.

"(b) The Administrator shall issue regulations governing issuance of permits for the disposal of sewage sludge subject to the tion. Such regulations shall require the application to such dis of each criterion, factor, procedure, and requirement applicabl permit issued under section 402 of this title, as the Administ determines necessary to carry out the objective of this Act.

State permit program.

"(c) Each State desiring to administer its own permit pro for disposal of sewage sludge within its jurisdiction may do so if submission of such program the Administrator determines such gram is adequate to carry out the objective of this Act.

14.1-31

"EMERGENCY POWERS

"SEC. 504. Notwithstanding any other provision of this Act, the Administrator upon receipt of evidence that a pollution source or combination of sources is presenting an imminent and substantial endangerment to the health of persons or to the welfare of persons where such endangerment is to the livelihood of such persons, such as inability to market shellfish, may bring suit on behalf of the United States in the appropriate district court to immediately restrain any person causing or contributing to the alleged pollution to stop the discharge of pollutants causing or contributing to such pollution or to take such other action as may be necessary.

"CITIZEN SUITS

"SEC. 505. (a) Except as provided in subsection (b) of this section, any citizen may commence a civil action on his own behalf—

"(1) against any person (including (i) the United States, and (ii) any other governmental instrumentality or agency to the extent permitted by the eleventh amendment to the Constitution) who is alleged to be in violation of (A) an effluent standard or limitation under this Act or (B) an order issued by the Administrator or a State with respect to such a standard or limitation, or

USC prec. title 1.

"(2) against the Administrator where there is alleged a failure of the Administrator to perform any act or duty under this Act which is not discretionary with the Administrator.

District court jurisdiction.

The district courts shall have jurisdiction, without regard to the amount in controversy or the citizenship of the parties, to enforce such an effluent standard or limitation, or such an order, or to order the Administrator to perform such act or duty, as the case may be, and to apply any appropriate civil penalties under section 309(d) of this Act.

Notice and filing.

"(b) No action may be commenced—

"(1) under subsection (a)(1) of this section—

"(A) prior to sixty days after the plaintiff has given notice of the alleged violation (i) to the Administrator, (ii) to the State in which the alleged violation occurs, and (iii) to any alleged violator of the standard, limitation, or order, or

"(B) if the Administrator or State has commenced and is diligently prosecuting a civil or criminal action in a court

of the United States, or a State to require compliance with the standard, limitation, or order, but in any such action in a court of the United States any citizen may intervene as a matter of right.

"(2) under subsection (a)(2) of this section prior to sixty days after the plaintiff has given notice of such action to the Administrator,

except that such action may be brought immediately after such notification in the case of an action under this section respecting a violation of sections 306 and 307(a) of this Act. Notice under this subsection shall be given in such manner as the Administrator shall prescribe by regulation.

Notice, regulation.

"(c)(1) Any action respecting a violation by a discharge source of an effluent standard or limitation or an order respecting such standard or limitation may be brought under this section only in the judicial district in which such source is located.

"(2) In such action under this section, the Administrator, if not a party, may intervene as a matter of right.

Litigation costs.

"(d) The court, in issuing any final order in any action brought pursuant to this section, may award costs of litigation (including reasonable attorney and expert witness fees) to any party, whenever the court determines such award is appropriate. The court may, if a temporary restraining order or preliminary injunction is sought, require the filing of a bond or equivalent security in accordance with the Federal Rules of Civil Procedure.

28 USC app.

"(e) Nothing in this section shall restrict any right which any person (or class of persons) may have under any statute or common law to seek enforcement of any effluent standard or limitation or to seek any other relief (including relief against the Administrator or a State agency).

"Effluent standard or limitation under this Act."

"(f) For purposes of this section, the term 'effluent standard or limitation under this Act' means (1) effective July 1, 1973, an unlawful act under subsection (a) of section 301 of this Act; (2) an effluent limitation or other limitation under section 301 or 302 of this Act; (3) standard of performance under section 306 of this Act; (4) prohibition, effluent standard or pretreatment standards under section 307 of this Act; (5) certification under section 401 of this Act; or (6) a permit or condition thereof issued under section 402 of this Act, which is in effect under this Act (including a requirement applicable by reason of section 313 of this Act).

"Citizen."

"(g) For the purposes of this section the term 'citizen' means a person or persons having an interest which is or may be adversely affected.

State Governor, civil action.

"(h) A Governor of a State may commence a civil action under subsection (a), without regard to the limitations of subsection (b) of this section, against the Administrator where there is alleged a failure of the Administrator to enforce an effluent standard or limitation under this Act the violation of which is occurring in another State and is causing an adverse effect on the public health or welfare in his State, or is causing a violation of any water quality requirement in his State.

"APPEARANCE

"SEC. 506. The Administrator shall request the Attorney General to appear and represent the United States in any civil or criminal action instituted under this Act to which the Administrator is a party. Unless the Attorney General notifies the Administrator within a reasonable time, that he will appear in a civil action, attorneys who are officers or employees of the Environmental Protection Agency shall appear and represent the United States in such action.

14.3 APPENDIX TO SECTION 2.7

APPENDIX TO SECTION 2.7

Life Histories of Seven Most Abundant Fish Species of Clinch River

White bass (*Morone chrysops*)

White bass seem to prefer a clear water environment over one that is silty or turbid. Usual total length measurements range from 25.4 cm to 30.5 cm (10 to 12 inches). In the spring, unisexual schools of sexually mature fishes are usually formed which move to estuaries or onto shoals for spawning. Spawning frequently takes place in the daylight and nearer to the water surface than to the bottom. Within a population of white bass, spawning can last for 5 to 10 days. Eggs are released near the surface or midwater and sink. These heavy eggs are adhesive and will attach to vegetation growing on the bottom, upon boulders or gravel. Both the young and adult white bass are carnivorous. Young fish feed on other fish, insect larvae and minute crustaceans. As the size of the white bass increases, food preference becomes strong for fish with the remainder of the diet consisting of mayflies, crustaceans and aquatic insects.[1]

Gizzard shad (*Dorosoma cepedianum*)

On the average, gizzard shad reach a total length of 25.4 cm (10 inches). They commonly live in lakes, large rivers, swamps, reservoirs, estuaries, brackish water bays and floodwater pools.[2] Spawning may occur from mid-March to mid-August in large rivers, ponds, sloughs and lakes.[1] During a study conducted at Norris Reservoir, Tennessee, gizzard shad were found to spawn from May 15 to June 8.[3] Sticky eggs are laid which may drift with the current or sink to the bottom and will attach to practically any object. As a young larva, the gizzard shad feeds on small zooplankton. When the gut develops, the diet then changes from zooplankton to small algae. Adults are herbivous and feed on algae, plytoplankton and microscopic plants.[1]

Threadfin shad (Dorosoma petenense)

In southern states threadfin shad have been reported up to a length of 17.8 cm (7 inches). There may be two peaks in spawning, one in the spring and the other in fall. Adhesive eggs are laid which attach to such objects as brush. The predominant food items in the threadfin shad's diet is plankton.[2]

Sauger (Stizostedion canadense)

Saugers are mainly restricted to freshwater areas and less commonly to brackish waters of North America. There seems to be a preference of habitat for turbid waters, especially large, slow moving rivers and shallow lakes. An average total length of 25.4 to 40.6 cm (10 to 16 inches) is reached. Spawning usually occurs for a two week period in the spring, commonly from the end of May to the beginning of June. Eggs are sticky when first laid, but due to a hardening action of the water, they become non-adhesive and semibuoyant. Nests are never built by saugers. Diet for younger fish consists of various stages of mayflies, zooplankton and chironomid larvae. Food preference of adults includes a variety of invertebrates and various small fish.[1]

Carp (Cyprinus carpio)

Ponds, reservoirs, lakes and slow moving streams are common habitats of carp.[4] A total length of 38.1 cm to 45.7 cm (15 to 18 inches) is usually reached by this species. When spawning occurs during spring and early summer, adhesive eggs are laid and become attached to grasses, roots and submerged weeds.[1] Nests are never built by carp.[5] As young fish, carp feed mainly on zooplankton and then as adults they become omnivorous. Diet of the adult encompasses zooplankton, phytoplankton, plant remains and bottom fauna with emphasis on chironomids.[2]

Smallmouth buffalo (*Ictiobus bubalus*)

A length of 76.2 cm (30 inches) is often obtained by the smallmouth buffalo. This species usually occurs in swift, deep waters of large rivers. Sloughs and shallow areas containing weeds are preferred locations for spawning in the early spring.[6] Both young fish and adults are bottom feeders and they eat cladocerans and copepods. Adults vary their diet slightly to include other food items such as algae and duckweed.[2]

Skipjack herring (*Alosa chrysochloris*)

Little information is known about the spawning habits of skipjack herring. However, spawning usually occurs in the early part of spring.[7] Diet of young fish is comprised mainly of insects and the adult's diet relies heavily on fish.[2]

14.4 APPENDIX TO SECTIONS 5.2 AND 5.3

APPENDIX TO SECTIONS 5.2 AND 5.3

Dose Calculation Models for Assessment of Radiological Impact on Man and Other Biota Under Normal Operating Conditions

GASEOUS EFFLUENTS

EXTERNAL DOSE TO MAN AND OTHER BIOTA FROM RADIOACTIVE CLOUD

The external dose to the body of an individual or organism (skin dose) from a semi-infinite spherical cloud of noble gases and/or radioactive particulates is given by:

$$D_\beta = 0.23\ (\chi/Q) \sum_i (A)_i\ (E_\beta)_i\ (3.155 \times 10^{10}) \qquad (1)$$

where,

D_β = Whole body beta skin dose, mrem/yr

χ/Q = Annual average meteorological dispersion factor at a downwind point of interest, sec/m^3

$(A)_i$ = Activity release rate to the environment of isotope, i, Ci/sec

$(E_\beta)_i$ = Average beta energy of isotope, i, per disintegration, as obtained from Table 5.3A-1, MeV

3.155×10^{10} = Factor to convert $\frac{rem}{sec}$ to $\frac{mrem}{yr}$

The whole body gamma dose to an individual should be computed based on a semi-infinite spherical cloud as given by:

$$D_\gamma = 0.25\ (\chi/Q) \sum_i (A)_i\ (E_\gamma)_i\ (3.155 \times 10^{10}) \qquad (2)$$

where,

D_γ = Whole body gamma dose, mrem/yr

χ/Q = Annual average meteorological dispersion factor at a downwind point of interest, sec/m^3

$(A)_i$ = Activity release rate to the environment of isotope, i, Ci/sec

$(E_\gamma)_i$ = Average gamma energy of isotope, i, per disintegration, as obtained from Table 5.3A-1, MeV

3.155×10^{10} = Factor to convert $\frac{rem}{sec}$ to $\frac{mrem}{yr}$

For normal conditions, the whole body population dose should be calculated as:

$$DP_\gamma = \sum_{r_j=0}^{50} \sum_{k=1}^{k=16} D_\gamma (r_j, \phi_k) \times P (r_j, \phi_k) \times 10^{-3} \qquad (3)$$

where,

DP_γ = Population dose, man-rem

$D_\gamma (r_j, \phi_k)$ = The whole body gamma dose rate to an individual from a semi-infinite spherical cloud of radioactive gases and/or particulates in the radial increment r_j, azimuthal increment ϕ_k. This dose rate will be calculated by Equation 2.

$P (r_j, \phi_k)$ = The population in radial sector r_j, azimuthal sector ϕ_k

10^{-3} = Factor to convert mrem to rem.

A summation over all radial and azimuthal sectors will then provide an estimate of the total population exposure DP_γ from 0 to 50 miles in units of man-rem.

INHALATION DOSE TO MAN

For normal operating conditions, the inhalation dose to the whole body and to various organs of an individual from inhalation of radionuclides is given by the equation:

$$D_{Inh} = (\chi/Q) \sum_i (A)_i \left(\frac{MPD}{MPC_a}\right)_i (CD) \qquad (4)$$

where,

D_{Inh} = The dose rate from inhalation of isotope, i, mrem/yr

χ/Q = Annual average meteorological dispersion factor at a downwind point of interest, sec/m^3

$(A)_i$ = Activity release rate to the environment of isotope, i, Ci/sec

$\left(\frac{MPD}{MPC_a}\right)_i$ = Dose conversion factor, mrem/yr per μCi/cc, which is the maximum permissible dose (MPD) per year divided by the maximum permissible concentration in air (MPC_a) for isotope, i. Dose conversion factors for calculating internal doses via the inhalation pathway are tabulated in Table 5.3A-3. These factors assume an average breathing rate for an adult "reference man" in a 24-hour period of 2.32×10^{-4} m^3/sec implicit in the $(MPD/MPC_a)_i$ evaluation based on continuous exposure.

(CD) = A factor to account for cloud depletion as a function of the downwind distance (r) and the height of the release (h). R = 1.0 for all elements except iodine.[1]

INTERNAL DOSES TO MAN FROM DRINKING WATER CONTAMINATED BY GASEOUS FALLOUT

The concentration C(I) of airborne particulates with half-lives > 8 days from fallout to nearby waters (such as reservoirs) is calculated as follows:

$$C(I) = (A)_i \times (\chi/Q) \times (VDW)_i \times \frac{(TRN)_i}{0.693} \times \frac{0.865 \times 10^5}{DEPT} \left[1 - \exp\left(\frac{-0.693\ TD}{(TRN)_i}\right)\right] \quad (5)$$

where,

C(I) = Concentration of activity of isotope, i, in water, Ci/m^3 or $\mu Ci/cc$

$(A)_i$ = The activity release rate to the environment of isotope, i, Ci/sec

χ/Q = Annual average meteorological dispersion factor at a downwind point of interest, sec/m^3

$(VDW)_i$ = Deposition velocity over water of isotope, i, m/sec. Values are tabulated in Table 5.3A-14.

$(TRN)_i$ = Radioactive half-life of isotope, i, days. Values are tabulated in Table 5.3A-1.

DEPT = Depth of the water, m

TD = Duration of dry deposition, days

0.865×10^5 = Sec/day.

The annual doses from drinking water from the reservoir with concentration C(I) as defined above are:

$$DWR = C(I) \left(\frac{MPD}{MPC_w}\right)_i \left[\exp\left(\frac{-0.693\ TT}{(TRN)_i}\right)\right] \quad (6)$$

where,

DWR = Dose rate from ingestion of isotope, i, mrem/yr

C(I) = Concentration of activity of isotope, i, μCi/cc

$\left(\frac{MPD}{MPC_w}\right)_i$ = Dose conversion factor, mrem/yr per μCi/cc, which is the maximum permissible dose (MPD) per year divided by the maximum permissible concentration in water (MPC_w) for isotope, i. Dose conversion factors for calculating internal doses are tabulated in Table 5.3A-5. These factors assume an average intake of 2,200 cc/day.

TT = Elapsed time between removal of water from reservoir and ingestion, days

$(TRN)_i$ = Radioactive half-life of isotope, i, days. Values are tabulated in Table 5.3A-1.

INTERNAL DOSES TO MAN FROM INGESTING LEAFY VEGETABLES CONTAMINATED BY GASEOUS FALLOUT

The concentration of radioactive materials on leafy vegetables is calculated as:

$$CLV = \left(\frac{1}{YC}\right)\left[\frac{(TW)_i}{0.693}\right]\left[1-\exp\left(\frac{-0.693\ TGS}{(TW)_i}\right)\right] \times (W)_i \times 10^6 \qquad (7)$$

where,

CLV = The concentration of isotope, i, in leafy vegetables, μCi/kg

YC = The yield per unit of cultivated land area for leafy vegetable, kg/m^2. Data is presented in Table 5.3A-14.

$(TW)_i$ = Environmental half-life of isotope, i, days. Calculate using the following relationship:

$$TW = \frac{T_p \, T_b}{T_p + T_b}$$

where,

T_p = Radioactive half-life of isotope

T_b = Weathering half-life of isotope

Values of $(TW)_i$ are tabulated in Table 5.3A-8.

TGS = Length of growing season for leafy vegetables, days. Data is presented in Table 5.3A-14.

$(W)_i = (A)_i \; (\chi/Q) \; (VDL)_i \times 0.865 \times 10^5$

where,

$(W)_i$ = Deposition rate, Ci/m^2-day

$(A)_i$ = Activity release rate to the environment of isotope, i, Ci/sec

χ/Q = Annual average meteorological dispersion factor at a downwind point of interest, sec/m^3

$(VDL)_i$ = Deposition velocity over land of isotope, i, m/sec. Values are presented in Table 5.3A-14.

0.865×10^5 = Sec/day

10^6 = Factor to convert Ci to μCi.

Internal doses to an individual from eating leafy vegetables contaminated from gaseous fallout at a concentration (CLV) are:

$$DLV = \sum_i (CLV)_i \; (TLV) \left[\frac{\left(\frac{MPD}{MPC_w}\right)_i}{2200} \right] \left[\exp\left(\frac{-0.693 \; TDL}{(TRN)_i} \right) \right] (FL) \qquad (8)$$

where,

DLV = Dose rate from ingestion of leafy vegetables, mrem/yr

$(CLV)_i$ = Concentration of leafy vegetables of isotope, i, μCi/kg

TLV = Total daily intake of leafy vegetables, kg/day

$\left(\frac{MPD}{MPC_w}\right)_i$ = Dose conversion factor, mrem/yr per μCi/cc, which is the maximum permissible dose (MPD) per year divided by the maximum permissible concentration in water (MPC_w) for isotope, i. Dose conversion factors for calculating internal doses are tabulated in Table 5.3A-5.

TDL = Elapsed time between harvest and ingestion, days. Data is presented in Table 5.3A-14.

$(TRN)_i$ = Radioactive half-life of isotope, i, days. Values are tabulated in Table 5.3A-1.

FL = Fraction of the year leafy vegetables are grown, $\leq$ 1.0

2200 = Assumed average intake of water, cc/day.

Doses should be calculated separately for each kind of leafy vegetable ingested and summed to obtain a total dose from ingestion of leafy vegetables contaminated by gaseous effluents.

INTERNAL DOSES TO MAN FROM INGESTION OF CONTAMINATED MILK

The concentration of radioisotopes in milk as a result of deposition of gaseous materials on pasture and subsequent ingestion by dairy cows is calculated as:

$$C = (G)\ (W)_i\ \frac{(TW)_i}{0.693}\ (SUMFT)\ (GF) \qquad (9)$$

where,

C = Concentration of isotope in milk, μCi/l

G = Effective grazing area of a cow, m^2. Data is presented in Table 5.3A-14.

$(W)_i = (A)_i\ (\chi/Q)\ (VDL)_i \times 0.865 \times 10^5 \times 10^6$

where,

$(W)_i$ = Deposition rate, μCi/m^2-day

$(A)_i$ = Activity release rate to the environment of isotope, i, Ci/sec

χ/Q = Annual average meteorological dispersion factor at a downwind point of interest, sec/m^3

$(VDL)_i$ = Deposition velocity over land of isotope, i, m/sec. Data is presented in Table 5.3A-14.

0.865×10^5 = Sec/day

10^6 = Factor to convert Ci to μCi

$(TW)_i$ = Environmental half-life of isotope, i, days. Calculate using the following relationship:

$$TW = \frac{T_p\ T_b}{T_p + T_b}$$

where,

T_p = Radioactive half-life of isotope

T_b = Weathering half-life of isotope

Values of $(TW)_i$ are tabulated in Table 5.3A-8.

SUMFT = Accumulative fractional intake of isotope per liter which is transferred to the milk each day, $\leq$ 1.0/l. Data is presented in Table 5.3A-14.

GF = Fraction of the year that a cow grazes on contaminated pasture, $\leq$ 1.0.

The resulting doses to an adult from ingestion of the contaminated milk is calculated as follows:

$$DTMA = \frac{(C)\ (GF)\ \frac{MPD}{MPC_{w\ i}}}{GWA}\ (GWM) \qquad (10)$$

where,

DTMA = Dose rate from ingestion of contaminated milk, mrem/yr

C = Concentration of isotope in milk, μCi/l

$\frac{MPD}{MPC_{w\ i}}$ = Dose conversion factor, mrem/yr per μCi/cc, which is the maximum permissible dose (MPD) per year, divided by the maximum permissible concentration in water (MPC_w) for isotope, i. Dose conversion factors for calculating internal doses are tabulated in Table 5.3A-5.

GWM = Daily intake of milk by an adult or child, l/day usually assumed to be one l/day.

GWA = Daily intake of water by an adult, cc/day. Assume a value of 2200 cc/day.

INTERNAL DOSES TO MAN FROM INGESTION OF BEEF CONTAMINATED BY GASEOUS FALLOUT

The concentration of radioactive materials in the meat of the beef cattle at butchering is calculated as:

$$C_B = (G)\ (W)_i \left[\frac{(TW)_i}{0.693}\right] (SUMFT)_B\ (FA) \qquad (11)$$

where,

C_B = The concentration of isotope, i, in beef, Ci/kg

G = Effective grazing area of cattle, m^2. Data is presented in Table 5.3A-14.

$(W)_i = (A)_i\ (\chi/Q)\ (VDL)_i \times 0.865 \times 10^5$

where,

$(W)_i$ = Deposition rate, Ci/m^2-day

$(A)_i$ = Activity release rate to the environment of isotope, i, Ci/sec

χ/Q = Annual average meteorological dispersion factor at a downwind point of interest, sec/m^3

$(VDL)_i$ = Deposition velocity over land of isotope, i, m/sec. Values are presented in Table 5.3A-14.

0.865×10^5 = Sec/day

$(TW)_i$ = Environmental half-life of isotope, i, days. Calculate using the following relationship:

$$TW = \frac{T_p\ T_b}{T_p + T_b}$$

where,

T_p = Radioactive half-life of isotope

T_b = Weathering half-life of isotope

Values of $(TW)_i$ are tabulated in Table 5.3A-8.

$(SUMFT)_B$ = Total cumulative fraction of isotope, i, transferred per kg of beef, $\leq$ 1.0/kg. Values are tabulated in Table 5.3A-14.

FA = Average fraction of the ground surface covered by vegetation, $\leq$ 1.0. Data is presented in Table 5.3A-14.

The internal doses to humans from ingestion of contaminated beef are:

$$D_B = \sum_i (C_B)_i \ (GF) \left[\frac{\left(\frac{MPD}{MPC_w}\right)_i}{2200} \right] (TB) \left[\exp\left(\frac{-0.693 \ TDB}{(TRN)_i} \right) \right] \times 10^6 \qquad (12)$$

where,

D_B = Dose rate from ingestion of contaminated beef, mrem/yr

$(C_B)_i$ = Concentration in beef of isotope, i, Ci/kg

GF = Fraction of the year in which beef cattle graze on contaminated pasture, $\leq$ 1.0

$\left(\frac{MPD}{MPC_w}\right)_i$ = Dose conversion factor, mrem/yr per μCi/cc, which is the maximum permissible dose (MPD) per year divided by the maximum permissible concentration in water (MPC_w) for isotope, i. Dose conversion factors for calculating internal doses are tabulated in Table 5.3A-5.

TB = Total daily human intake of beef, kg/day. Data is presented in Table 5.3A-14.

TDB = Elapsed time between butchering and ingestion, days. Data is presented in Table 5.3A-14.

$(TRN)_i$ = Radioactive half-life of isotope, i. Values are tabulated in Table 5.3A-1.

2200 = Assumed average intake of water for an adult, cc/day

10^6 = Factor to convert Ci to μCi.

DOSE TO HUMANS FROM EXPOSURE TO TRITIUM THROUGH ALL PATHWAYS

For gaseous tritium releases in the form of tritiated water vapor (HTO) resulting from normal operations, one or more pathways must be considered. These include:

1. Inhalation and (skin) absorption;
2. Ingestion of milk contaminated by the fallout of HTO to the cow's forage and by inhalation by the cow;
3. Ingestion of vegetables contaminated by HTO fallout; and
4. Ingestion in meat (beef) through the same pathways as for the cow (fallout to forage and inhalation of grazing beef cattle).

Assuming that the tritium is released in the form of HTO instead of elemental tritium results in a conservative estimate of resulting doses.

The basic dose equation for these various pathways can be represented as:

$$D_t = \sum_{p=1}^{4} (\chi/Q)\ (A)_t \times (G)_{tp} \qquad (13)$$

where,

D_t = The annual dose from tritium from continuous, low-level releases of HTO, mrem/yr

$(A)_t$ = The average annual release rate to the atmosphere of tritiated water, Ci/sec

χ/Q = Annual average meteorological dispersion factor at a downwind point of interest, sec/m^3. χ/Q values should be selected to correspond to the four respective pathways outlined above as follows: (1) the nearest individual's location; (2) the location where the nearest dairy cow grazes; (3) the location of the nearest commercial or private garden where vegetables are grown; and (4) the location where the nearest beef cattle graze.

$(G)_{tp}$ = The dose conversion factor for inhalation, absorption and/or ingestion of tritium into the human body, mrem/yr per μCi/cc, at the respective locations noted above. Thus, the total annual dose from tritium results from summing the dose components from the appropriate pathways. These values are presented in Table 5.3A-6 for pathways 1 to 4.

p = The representative index on the four pathways listed above.

EXTERNAL DOSE TO BIOTA OTHER THAN MAN FROM DRY DEPOSITION OF GASEOUS EFFLUENTS TO THE GROUND

Concentration of radioactive material deposited on the ground is calculated as:

$$SJ = \frac{(\chi/Q)\ (A)_i\ (VDL)_i\ (TW)_i}{0.693}\left[1 - \exp\left(\frac{-0.693\ TD}{(TW)_i}\right)\right] \times 8.64 \times 10^{16} \quad (14)$$

where,

SJ = Concentration of isotope, i, deposited on the ground, pCi/m^2

χ/Q = Annual average meteorological dispersion factor at a downwind point of interest, sec/m^3

$(A)_i$ = Activity release rate to the environment of isotope, i, Ci/sec

$(VDL)_i$ = Deposition velocity over land for isotope, i, m/sec. Data is presented in Table 5.3A-14.

$(TW)_i$ = Environmental half-life of isotope, i, days. Calculate using the following relationship:

$$TW = \frac{T_p \, T_b}{T_p + T_b}$$

where,

T_p = Radioactive half-life of isotope

T_b = Weathering half-life of isotope

Values of $(TW)_i$ are tabulated in Table 5.3A-8.

TD = Duration of dry deposition, days

8.64×10^{16} = Factor to convert Ci-days/m^2-sec to pCi/m^2

Calculation for external dose to biota from contaminated dry ground is:

$$DDG = \sum_i (SJ)_i \, (DSD)_i \times 8760 \qquad (15)$$

where,

DDG = External dose rate from contaminated ground, mrem/yr

$(SJ)_i$ = Concentration on ground of isotope, i, pCi/m^2

$(DSD)_i$ = Dose conversion factor for gamma exposure at 1 meter above ground surface, mrem/hr per pCi/m^2. Values are tabulated in Table 5.3A-7.

8760 = Hrs/yr

DOSE TO BIOTA OTHER THAN MAN FROM INGESTION OF FOOD CROPS CONTAMINATED BY GASEOUS EFFLUENTS

Concentration of radioactive materials deposited on vegetation is calculated as:

$$CDI = \left[\frac{(SJ)_i \ (FLI)_i \ (FA)}{(YC)}\right]\left[\frac{1 - \exp\left(\frac{-0.693 \ TGS}{(TW)_i}\right)}{1 - \exp\left(\frac{-0.693 \ TD}{(TW)_i}\right)}\right] \times 10^{-3} \qquad (16)$$

where,

CDI = Concentration of isotope, i, deposited on vegetation, pCi/g

$(SJ)_i$ = Concentration on ground of isotope, i, pCi/m^2

$(FLI)_i$ = Fractional retention of isotope, i, on vegetation leaves, $\leq$ 1.0. Data is presented in Table 5.3A-14.

FA = Average fraction of the ground surface covered by vegetation, $\leq$ 1.0. Data is presented in Table 5.3A-14.

YC = Average plant vegetation density, kg/m^2. Data is presented in Table 5.3A-14.

TGS = Length of growing season for vegetation, days

$(TW)_i$ = Environmental half-life of isotope, i, days. Calculate using the following relationship:

$$TW = \frac{T_p \ T_b}{T_p + T_b}$$

where,

T_p = Radioactive half-life of isotope

T_b = Weathering half-life of isotope

Values of $(TW)_i$ are tabulated in Table 5.3A-8.

TD = Duration of dry deposition, days

10^{-3} = Factor to convert $\frac{pCi}{kg}$ to $\frac{pCi}{g}$

The internal dose to an organism feeding on the contaminated vegetation is:

$$DSV = \frac{(0.00213)\ (8760)\ (1.44)}{10^3} \sum_i \left[\frac{(TE)_i\ (R)\ (FW)_i\ (CDI)_i}{MS}\right] \times \left[1 - \exp\left(\frac{-0.693\ TF}{(TE)_i}\right)\right] \times (EAE)_i \qquad (17)$$

where,

DSV = Dose rate from ingestion of isotope, i, mrem/yr

$(TE)_i$ = Effective half-life of isotope, i, days. Since data for organisms other than man are not generally available, data for man found in ICRP-2 will be used. Values are tabulated in Table 5.3A-9.

R = Rate of ingestion of vegetation, g/day. Data is presented in Table 5.3A-14.

$(FW)_i$ = Fraction of ingested isotope, i, retained in the feeding organism, ≤ 1.0. Since specific data for biota other than man is not generally available, values for $(FW)_i$ for man will be obtained from ICRP-2. Values are tabulated in Table 5.3A-11.

$(CDI)_i$ = Concentration of isotope, i, deposited on vegetation, pCi/g

MS = Mass of the feeding organism, kg. Data is presented in Table 5.3A-14.

TF = Period of ingestion of the vegetation, days

$(EAE)_i$ = Effective absorbed beta and gamma energy of isotope, i, in the feeding organism considering both the size of the organism and the internal distribution of the isotope, MeV/dis. Data is tabulated in Table 5.3A-10.

0.00213 = Factor to convert $\frac{\text{Mev} \cdot \text{pCi}}{\text{g}}$ to mrem/yr

8760 = Hrs/yr

10^3 = Factor to convert kg to g

$1.44 = \frac{1}{0.693}$

Doses should be calculated separately for each kind of food crop ingested and then summed to obtain a total dose from ingestion of food crops contaminated by gaseous effluents for each organism.

DOSE TO BIOTA OTHER THAN MAN FROM INGESTION OF FOOD CROPS CONTAMINATED BY UPTAKE OF RADIOACTIVE MATERIAL FROM THE SOIL VIA THE ROOT PATHWAY

Concentration of radioactive material in the vegetation is:

$$CPI = (4.46 \times 10^{-6})\ (SJ)_i\ (FRI)_i\ (FSI)_i \left[\frac{1 - \exp\left(\frac{-0.693\ TD}{(TRN)_i}\right)}{1 - \exp\left(\frac{-0.693\ TD}{(TW)_i}\right)} \right] \quad (18)$$

where,

CPI = Concentration of isotope, i, in vegetation, pCi/g

$(SJ)_i$ = Concentration on ground of isotope, i, pCi/m^2

$(FRI)_i$ = Transfer coefficient for soil to plant via the roots $\frac{\text{pCi/kg plant}}{\text{pCi/kg soil}}$, no units. Data is presented in Table 5.3A-14.

$(FSI)_i$ = Fraction of isotope, i, which reaches the soil, ≤ 1.0. Data is presented in Table 5.3A-14.

TD = Duration of dry deposition, days

$(TRN)_i$ = Radioactive half-life of isotope, i, days. Values are tabulated in Table 5.3A-1.

$(TW)_i$ = Environmental half-life of isotope, i, days. Calculate using the following relationship:

$$TW = \frac{T_p \, T_b}{T_p + T_b}$$

where,

T_p = Radioactive half-life of isotope

T_b = Weathering half-life of isotope

Values of $(TW)_i$ are tabulated in Table 5.3A-8.

4.46×10^{-6} = Factor to convert $\frac{pCi}{m^2}$ to $\frac{pCi}{g}$ assuming 224 kg soil/m^2.

The dose rate to the secondary organism feeding on the vegetation is:

$$DRFS = \frac{(0.00213)\ (8760)\ (1.44)}{10^3} \sum_i \left[\frac{(TE)_i\ (R)\ (FW)_i\ (CPI)_i}{MS} \right] \times \left[1 - \left(\exp \frac{-0.693\ TF}{(TE)_i} \right) \right] (EAE)_i \qquad (19)$$

where,

DRFS = Dose rate from ingestion of isotope, i, mrem/yr

$(TE)_i$ = Effective half-life of isotope, i, days. Since data for organisms other than man are not generally available, data for man found in ICRP-2 will be used. Values are tabulated in Table 5.3A-9.

R = Rate of ingestion of vegetation, g/day. Data is presented in Table 5.3A-14.

$(FW)_i$ = Fraction of ingested isotope, i, retained in the feeding organism, ≤ 1.0. Since data for biota other than man is not generally available, values for $(FW)_i$ for man will be obtained from ICRP-2. Values are tabulated in Table 5.3A-11.

$(CPI)_i$ = Concentration of isotope, i, on vegetation, pCi/g

MS = Mass of the feeding organism, kg. Data is presented in Table 5.3A-14.

TF = Period of ingestion of the vegetation, days

$(EAE)_i$ = Effective absorbed beta and gamma energy of isotope, i, in the feeding organism considering both the size of the organism and the internal distribution of the isotope, MeV/dis. Data are tabulated in Table 5.3A-10.

0.00213 = Factor to convert $\frac{\text{MeV} \cdot \text{pCi}}{\text{g}}$ to mrem/yr

8760 = Hrs/yr

10^3 = Factor to convert kg to g

$1.44 = \frac{1}{0.693}$

Doses should be calculated separately for each type of vegetation ingested and then summed to obtain a total dose from ingestion of contaminated food for each organism.

LIQUID EFFLUENTS

EXTERNAL WHOLE BODY DOSE TO MAN AND OTHER BIOTA FROM SHORELINE DEPOSITS

Gamma dose rate to an individual or organism above a uniformly contaminated plane is calculated by the following equation:

$$DSED = 10^2 \, (TS) \, (WW) \sum_i (TRN)_i \, (CW)_i \, (DSD)_i \quad x$$

$$\left[1 - \exp\left(\frac{-0.693 \; TTS}{(TRN)_i}\right)\right] (DFS) \left[\exp\left(\frac{-0.693 \; TIM}{(TRN)_i}\right)\right] \qquad (20)$$

where,

DSED = Whole body dose rate from contaminated shoreline, mrem/yr

TS = Time of exposure to sediment, hrs/yr

WW = Water body width factor, no units. Values are tabulated in Table 5.3A-12.

$(TRN)_i$ = Radioactive half-life of isotope, i, days. Values are tabulated in Table 5.3A-1.

$(CW)_i$ = Concentration in water of isotope, i, pCi/cc

$(DSD)_i$ = Dose conversion factor for shoreline sediment, mrem/hr per pCi/m^2. Values are tabulated in Table 5.3A-7.

TTS = Total time of immersion of sediment in contaminated receiving water (normally taken to be the operating lifetime of the facility), days

DFS = Dilution factor for isotope concentration at sediment location, $\leq$ 1.0

TIM = Elapsed time between isotope release and exposure, days

10^2 = Constant derived from water and sediment sample data collected from the Columbia River and Tillamook Bay and compared with data from other aquatic systems.[1]

EXTERNAL DOSES TO MAN AND OTHER BIOTA FROM IMMERSION IN CONTAMINATED WATER

The whole body gamma dose rate from immersion in effluent waters is calculated as:

$$DGIM = \sum_i (CW)_i \ (DFGAM)_i \ (TI) \ (DFAC) \left[\exp\left(\frac{-0.693 \ TIM}{(TRN)_i} \right) \right] \times 10^9 \quad (21)$$

where,

DGIM = Gamma dose rate, mrem/yr

$(CW)_i$ = Concentration in discharge water of isotope, i, μCi/cc

$(DFGAM)_i$ = Whole body dose conversion factor for immersion in water containing isotope, i, mrem/hr per pCi/l. Values are tabulated in Table 5.3A-7.

TI = Time of exposure, hrs/yr

DFAC = Dilution factor of isotopes in receiving water, $\leq$ 1.0

TIM = Elapsed time between isotope release and exposure, days

$(TRN)_i$ = Radioactive half-life of isotope, i, days. Values are tabulated in Table 5.3A-1.

10^9 = Factor to convert μCi/cc to pCi/l.

The beta skin dose rate from immersion in effluent waters is calculated as:

$$DBIM = \sum_i (CW)_i \ (DFBETA)_i \ (TI) \ (DFAC) \left[\exp\left(\frac{-0.693 \ TIM}{(TRN)_i} \right) \right] \times 10^9 \quad (22)$$

where,

DBIM = Beta dose rate to the skin, mrem/yr

$(CW)_i$ = Concentration in discharge water of isotope, i, μCi/cc

$(DFBETA)_i$ = Beta skin dose conversion factor for immersion in water containing isotope, i, mrem/hr per pCi/l. Values are tabulated in Table 5.3A-7.

TI = Time of immersion, hrs/yr

DFAC = Dilution factor of isotopes in receiving water, $\leq$ 1.0

TIM = Elapsed time between isotope release and exposure, days

$(TRN)_i$ = Radioactive half-life of isotope, i, days. Values are tabulated in Table 5.3A-1.

10^9 = Factor to convert μCi/cc to pCi/l.

The population dose from water immersion is:

$$DPIM = (DGIM)\ (PIM) \times 10^{-3} \tag{23}$$

where,

DPIM = The population dose from water immersion, man-rem/yr

10^{-3} = Factor to convert mrem to rem

PIM = Population engaged in immersion in effluent discharge waters

DGIM = Gamma dose rate, mrem/yr.

EXTERNAL DOSES TO MAN FROM ABOVE-WATER ACTIVITIES

External gamma exposure from above-water activities is calculated by the following method:

$$DGAW = \frac{1}{2}\ (DGIM) \left(\frac{TAW}{TI}\right) \tag{24}$$

where,

DGAW = Gamma dose rate for above-water activities (boating, water-skiing, fishing, swimming), mrem/yr

DGIM = Gamma dose rate received from immersion in effluent water, mrem/yr

TAW = Number of hours spent in above-water activities, hr/yr. Data are presented in Table 5.3A-14.

TI = Number of hours spent in immersion, hr/yr. Data are presented in Table 5.3A-14.

$\frac{1}{2}$ = Geometry factor for above-water activities, no units.

Beta exposure from above-water activities is calculated as:

$$DBAW = \frac{1}{2} (DBIM) \left(\frac{TAW}{TI}\right) \tag{25}$$

where,

DBAW = Beta dose rate to the skin from above-water activities, mrem/yr

DBIM = Beta dose rate to the skin received from immersion in effluent water, mrem/yr

TAW = Number of hours spent in above-water activities, hr/yr. Data are presented in Table 5.3A-14.

TI = Number of hours spent in immersion, hr/yr. Data are presented in Table 5.3A-14.

$\frac{1}{2}$ = Geometry factor for above-water activities, no units.

Population dose from above-water activities is:

$$DPAW = (DGAW)\ (PAW) \times 10^{-3} \tag{26}$$

where,

DPAW = Population dose, man-rem/yr

DGAW = Whole body gamma dose to an individual from above-water activities, mrem/yr

PAW = Population engaged in above-water activities on the effluent discharge waters

10^{-3} = Factor to convert mrem to rem.

INTERNAL DOSES TO MAN FROM INGESTION OF POTABLE WATER

The dose to whole body and various organs received by ingestion of potable water contaminated by liquid effluents can be calculated using the following equation:

$$DWP = \sum_i \frac{\left(\frac{MPD}{MPC_w}\right)_i (CW)_i \ (G_w)}{GWA} \left[\exp\left(\frac{-0.693 \ TIM}{(TRN)_i}\right)\right] (DF) \qquad (27)$$

where,

DWP = The dose rate from ingestion of isotope, i, mrem/yr

$\left(\frac{MPD}{MPC_w}\right)_i$ = Dose conversion factor, mrem/yr per μCi/cc, which is the maximum permissible dose (MPD) per year divided by the maximum permissible concentration in water (MPC_w) for isotope, i. Dose conversion factors for calculating internal doses are tabulated in Table 5.3A-5.

$(CW)_i$ = The concentration in discharge water of isotope, i, μCi/cc

G_w = The amount of water ingested, g/day

GWA = Amount of water ingested by an adult, g/day (a value of 2,200 g/day is assumed)

TIM = Elapsed time between isotope release and ingestion, days

$(TRN)_i$ = Radioactive half-life for isotope, i, days. Values are tabulated in Table 5.3A-1.

DF = Dilution factor in receiving water, $\leq$ 1.0.

INTERNAL DOSES TO MAN FROM INGESTION OF AQUATIC FOODS

The dose to whole body and various organs received from ingestion of aquatic food contaminated with radioactive material is calculated as:

$$DOSE = \sum_i \left(\frac{MPD}{MPC_w}\right)_i (BCF)_i \left(\frac{G_F}{GWA}\right) (CW)_i \left[\exp\left(\frac{-0.693\ TIM}{(TRN)_i}\right)\right] (DF)\ (HF) \qquad (28)$$

where,

DOSE = The dose rate from ingestion of isotope, i, mrem/yr

$\left(\frac{MPD}{MPC_w}\right)_i$ = Dose conversion factor, mrem/yr per μCi/cc, which is the maximum permissible dose (MPD) per year divided by the maximum permissible concentration in water (MPC_w) for isotope, i. Dose conversion factors for calculating internal doses are tabulated in Table 5.3A-5.

$(BCF)_i$ = Bioaccumulation factor for isotope, i. Values are tabulated in Table 5.3A-11.

G_F = Amount of food ingested, g/day

GWA = Amount of water ingested by an adult, g/day (2,200 g/day assumed)

$(CW)_i$ = Concentration in discharge water of isotope, i, μCi/cc

TIM = Elapsed time between isotope release and ingestion, days

$(TRN)_i$ = Radioactive half-life of isotope, i, days. Values are tabulated in Table 5.3A-1.

DF = Dilution factor in receiving waters, $\leq$ 1.0

HF = Fraction of year water is ingested, $\leq$ 1.0.

Doses should be calculated separately for each kind of aquatic food ingested and then summed to obtain a total dose from ingestion of aquatic foods.

The population dose from ingestion of aquatic foods is calculated in the following manner:

$$PODA = 10^{-3} \sum_j \left[\frac{(W)_j \ (WF)_j \ (DOSE)_j}{(G)_j} \right] \tag{29}$$

where,

PODA = Whole body gamma dose from ingestion of all aquatic foods, man-rem/yr

$(W)_j$ = Respective total weights of fish, crustacea and mollusk taken from the vicinity of the effluent discharge, g/day

$(WF)_j$ = Fractional weight of each of the species which is edible, $\leq$ 1.0

$(DOSE)_j$ = Dose rate to an individual from food, j, calculated above in equation 28, mrem/yr

$(G)_j$ = Amount of food, j, ingested by an individual, g/day-person. Data are presented in Table 5.3A-14.

10^{-3} = Factor to convert mrem to rem.

INTERNAL WHOLE BODY DOSE TO BIOTA OTHER THAN MAN FROM INGESTION OF CONTAMINATED WATER

Internal dose to organisms from ingestion of radioactive materials in water is calculated as:

$$DPO = (0.00213)\ (8760)\ (10^6) \sum_i (CW)_i\ (BCF)_i\ (EAE)_i\ (DF) \qquad (30)$$

where,

DPO = Internal dose rate from ingestion of isotope, i, mrem/yr

$(CW)_i$ = Concentration in discharge water of isotope, i, μCi/cc

$(BCF)_i$ = Bioaccumulation factor for isotope, i. Values are tabulated in Table 5.3A-13.

$(EAE)_i$ = Effective absorbed beta and gamma energy of isotope, i, in the organism considering both the size of the organism and the internal distribution of the isotope, MeV/dis. Data are tabulated in Table 5.3A-10.

DF = Dilution factor in receiving waters, $\leq$ 1.0

0.00213 = Factor to convert $\frac{MeV \cdot pCi}{g}$ to mrem/hr

8760 = Number of hrs/yr

10^6 = Factor to convert μCi to pCi

INTERNAL DOSE TO BIOTA OTHER THAN MAN FROM INGESTION OF AQUATIC FOODS

The internal whole body dose to organisms feeding on aquatic foods contaminated with radioactive materials is calculated as:

$$DSO = (0.00213)\ (8760)\ (10^3)\ (1.44) \sum_i \left[\frac{(TE)_i\ (P)\ (FW)_i\ (CW)_i\ (BCF)_i}{MS}\right] \times \left[1 - \exp\left(\frac{-0.693\ TC}{(TE)_i}\right)\right] (EAE)_i\ (DF) \qquad (31)$$

where,

DSO = Internal dose rate from ingestion of isotope, i, mrem/yr

$(TE)_i$ = Effective half-life of isotope, i, days. Since data for organisms other than man are not generally available, data for man found in ICRP-2 will be used. Values are tabulated in Table 5.3A-9.

P = Rate of ingestion of aquatic food, g/day

$(FW)_i$ = Fraction of ingested isotope, i, retained in the feeding organism, $\leq$ 1.0. Since data for biota other than man are not generally available, values for $(FW)_i$ for man will be obtained from ICRP-2. Values are tabulated in Table 5.3A-11.

$(CW)_i$ = Concentration in discharge water of isotope, i, μCi/cc

$(BCF)_i$ = Bioaccumulation factor for isotope, i. Values are tabulated in Table 5.3A-13.

MS = Mass of the feeding organism, kg

TC = Period of ingestion of aquatic food, days

$(EAE)_i$ = Effective absorbed beta and gamma energy of isotope, i, in the feeding organism considering both the size of the feeding organism and the internal distribution of the isotope, MeV/dis. Data are tabulated in Table 5.3A-10.

DF = Dilution factor in receiving waters, $\leq$ 1.0

0.00213 = Factor to convert $\frac{\text{MeV} \cdot \text{pCi}}{\text{g}}$ to mrem/hr

8760 = Hrs/yr

10^3 = Factor to convert $\frac{\mu\text{Ci}}{\text{kg}}$ to $\frac{\text{pCi}}{\text{g}}$

$1.44 = \frac{1}{0.693}$

Doses should be calculated separately for each kind of aquatic food ingested and summed to obtain a total dose from ingestion of aquatic foods for each organism.

TABLE 5.3A-1

RADIOLOGICAL DATA FOR ISOTOPES RELEASED FROM CRBRP RADWASTE SYSTEMS

Isotope	Radioactive Half-life[2] (Days)	Total Gamma Energy[2,3] (MeV/dis)	Average Beta Energy[2,4] (MeV/dis)
H-3	4.49×10^{3}	0.0	0.006
Na-22	3.16×10^{2}	2.195	0.182
Na-24	6.25×10^{-1}	4.123	0.463
Ne-23	4.40×10^{-4}	0.160	1.460
Ar-39	9.80×10^{4}	0.0	0.188
Ar-41	7.60×10^{-2}	1.280	0.406
Cr-51	2.78×10^{1}	0.029	0.105
Mn-54	3.03×10^{2}	0.835	0.276
Fe-59	4.56×10^{1}	1.190	0.116
Co-58	7.13×10^{1}	0.977	0.024
Co-60	1.92×10^{3}	2.510	0.105
Kr-83m	7.80×10^{-2}	0.002	0.036
Kr-85	3.93×10^{3}	0.002	0.230
Kr-85m	1.82×10^{-1}	0.158	0.277
Kr-87	5.30×10^{-2}	0.793	1.324
Kr-88	1.16×10^{-1}	1.950	0.376
Sr-89	5.27×10^{1}	8.2×10^{-5}	0.488
Sr-90	1.01×10^{4}	0.0	0.182
Y-89m	1.86×10^{-4}	0.910	0.297
Y-90	2.67×10^{0}	0.0	0.930
Y-91	5.88×10^{1}	0.004	0.515
Zr-95	6.55×10^{1}	0.725	0.130
Nb-95	3.50×10^{1}	0.765	0.053
Mo-99	2.80×10^{0}	0.137	0.410

(Continued)

TABLE 5.3A-1 (Continued)

Isotope	Radioactive Half-life[2] (Days)	Total Gamma Energy[2,3] (MeV/dis)	Average Beta Energy[2,4] (MeV/dis)
Ru-103	3.95×10^{1}	0.474	0.077
Ru-106	3.68×10^{2}	0.0	0.013
Rh-106	3.50×10^{-4}	0.200	1.180
Ag-111	7.50×10^{0}	0.023	0.350
Sb-125	9.90×10^{2}	0.121	0.335
Te-129	4.80×10^{-2}	0.098	0.499
Te-129m	3.41×10^{1}	0.041	0.621
Te-132	3.24×10^{0}	0.216	0.100
I-131	8.05×10^{0}	0.371	0.197
I-132	9.60×10^{-2}	2.400	0.448
Xe-131m	1.18×10^{1}	0.201	0.143
Xe-133	5.27×10^{0}	0.045	0.135
Xe-133m	2.26×10^{0}	0.042	0.189
Xe-135	0.38×10^{0}	0.247	0.316
Xe-135m	1.08×10^{-2}	0.432	0.095
Xe-138	1.21×10^{-2}	1.183	0.612
Cs-134	7.47×10^{2}	1.590	0.166
Cs-136	1.37×10^{1}	2.230	0.139
Cs-137	1.10×10^{4}	0.563	0.246
Ba-140	1.28×10^{1}	0.236	0.284
La-140	1.70×10^{0}	2.120	0.397
Ce-141	3.25×10^{1}	0.070	0.315
Ce-144	2.84×10^{2}	0.016	0.101
Pr-143	1.36×10^{1}	0.0	0.310
Pr-144	1.19×10^{-2}	0.030	0.997
Nd-147	1.11×10^{1}	0.122	0.335

(Continued)

TABLE 5.3A-1 (Continued)

Isotope	Radioactive Half-life[2] (Days)	Total Gamma Energy[2,3] (MeV/dis)	Average Beta Energy[2,4] (MeV/dis)
Pm-147	9.56×10^{2}	0.0	0.070
Eu-155	6.61×10^{2}	0.049	0.075
Ta-182	1.15×10^{2}	1.133	0.877
Pu-239*	8.90×10^{6}	2.9×10^{-5}	0.036
Pu-240*	2.40×10^{6}	1.3×10^{-7}	0.022
Pu-241	4.80×10^{3}	2.3×10^{-7}	0.007
Pu-242*	1.38×10^{8}	0.0	0.0

*Decay is primarily by alpha emission. Total alpha energies, MeV/dis, for the plutonium isotopes are as follows:

1. Pu-239 - 5.10
2. Pu-240 - 5.16
3. Pu-242 - 4.89

TABLE 5.3A-2

MAXIMUM PERMISSIBLE CONCENTRATION IN AIR (MPC_a)* FOR CONTINUOUS EXPOSURE TO RADIONUCLIDES RELEASED FROM THE CRBRP GASEOUS RADWASTE SYSTEM[5]

Isotope	Whole Body (μCi/cc)
H-3	3×10^{-6}
Ne-23	3×10^{-7}+
Ar-39	1×10^{-9}+
Ar-41	3×10^{-7}+
Kr-83m	3×10^{-7}+
Kr-85	3×10^{-6}**
Kr-85m	1×10^{-6}**
Kr-87	2×10^{-7}**
Kr-88	2×10^{-7}+
Xe-131m	4×10^{-6}**
Xe-133	3×10^{-6}**
Xe-133m	3×10^{-6}+
Xe-135	1×10^{-6}**
Xe-135m	1×10^{-9}+
Xe-138	3×10^{-7}+

*MPC_a for soluble compounds

**MPC_a in 10CFR20, Table II, column 1 are based upon a maximum permissible dose of 1/10 of the occupational exposure levels reported in ICRP-2[5]

+MPC_a is calculated from data presented in 10CFR20, Table II, column 1

TABLE 5.3A-3

DOSE CONVERSION FACTORS* FOR EXPOSURE VIA INHALATION
TO RADIOACTIVE MATERIALS RELEASED FROM THE CRBRP GASEOUS RADWASTE SYSTEM

Isotope	Whole Body (mrem/yr per μCi/cc)
H-3	1.7×10^{9}
Ne-23	1.7×10^{10}
Ar-39	5.0×10^{12}
Ar-41	1.7×10^{10}
Kr-83m	1.7×10^{10}
Kr-85	1.7×10^{9}
Kr-85m	5.0×10^{9}
Kr-87	2.5×10^{10}
Kr-88	2.5×10^{10}
Xe-131m	1.3×10^{9}
Xe-133	1.7×10^{9}
Xe-133m	1.7×10^{9}
Xe-135	5.0×10^{9}
Xe-135m	5.0×10^{12}
Xe-138	1.7×10^{10}

*Calculated from data tabulated in Table 5.3A-2, maximum permissible dose ÷ maximum permissible concentration in air, $\left(\frac{MPD}{MPC_a}\right)$

TABLE 5.3A-4

MAXIMUM PERMISSIBLE CONCENTRATION IN WATER, MPC_w, FOR CONTINUOUS EXPOSURE TO RADIONUCLIDES RELEASED FROM THE CRBRP RADWASTE SYSTEMS[5]

μCi/cc

Isotope	Whole Body	Bone	GI Tract**	Thyroid (adult)	Kidney
H-3	5×10^{-2}	--	--	--	--
Na-22	4×10^{-4}+	--	3×10^{-3}	--	--
Na-24	4×10^{-3}	--	2×10^{-3}+	--	--
Cr-51	2×10^{-1}	--	2×10^{-2}+	1×10^{0}	2×10^{0}
Mn-54	8×10^{-3}	--	1×10^{-3}+	--	--
Fe-59	2×10^{-3}	1×10^{-2}	5×10^{-4}+	--	--
Co-58	4×10^{-3}	--	9×10^{-4}+	--	7×10^{-2}
Co-60	1×10^{-3}	--	3×10^{-4}+	--	3×10^{-2}
Sr-89	7×10^{-4}	2×10^{-4}++	3×10^{-4}	--	--
Sr-90	4×10^{-6}	1×10^{-5}++	4×10^{-4}	--	--
Y-89m	NA	--	--	--	--
Y-90	3×10^{1}	4×10^{0}	2×10^{-4}+	--	--
Y-91	2×10^{0}	3×10^{-1}	3×10^{-4}+	--	--
Zr-95	1×10^{0}	2×10^{0}	6×10^{-4}+	--	2×10^{0}
Nb-95	4×10^{0}	7×10^{0}	1×10^{-3}+	--	6×10^{0}

(Continued)

TABLE 5.3A-4 (Continued)

μCi/cc

Isotope	Whole Body	Bone	GI Tract**	Thyroid (adult)	Kidney
Mo-99	8×10^{-3}	--	4×10^{-4} +	--	2×10^{-3} +
Ru-103	8×10^{-2}	2×10^{-1}	8×10^{-4} +	--	3×10^{-2}
Ru-106	2×10^{-2}	1×10^{-2}	1×10^{-4} +	--	4×10^{-3}
Rh-106	NA	--	--	--	--
Ag-111	5×10^{-1}	6×10^{-1}	4×10^{-4} +	--	2×10^{-1}
Sb-125	2×10^{-2}	2×10^{-2}	1×10^{-3} +	2×10^{1}	--
Te-129	5×10^{-1}	1×10^{0}	8×10^{-3} +	1×10^{0}	1×10^{-1}
Te-129m	2×10^{-3}	3×10^{-3}	2×10^{-4} +	8×10^{-3}	4×10^{-4}
Te-132	5×10^{-3}	2×10^{-2}	2×10^{-4} +	2×10^{-2}	2×10^{-3}
I-131	2×10^{-3}	--	1×10^{-2}	2×10^{-5} ▽	--
I-132	4×10^{-2}	--	4×10^{-3}	6×10^{-4} ▽	--
Cs-134	9×10^{-5} +	7×10^{-4}	5×10^{-3}	--	4×10^{-4}
Cs-136	9×10^{-4} +	1×10^{-2}	8×10^{-3}	--	3×10^{-3}
Cs-137	2×10^{-4} +	5×10^{-4}	8×10^{-3}	--	5×10^{-4}
Ba-140	5×10^{-3}	2×10^{-3}	2×10^{-4} +	--	3×10^{0}
La-140	2×10^{1}	2×10^{1}	2×10^{-4} +	--	--
Ce-141	1×10^{1}	5×10^{0}	9×10^{-4} +	--	7×10^{0}
Ce-144	3×10^{-1}	8×10^{-2}	1×10^{-4} +	--	2×10^{-1}

(Continued)

TABLE 5.3A-4 (Continued)

μCi/cc

Isotope	Whole Body	Bone	GI Tract**	Thyroid (adult)	Kidney
Pr-143	1×10^{1}	4×10^{0}	5×10^{-4}+	--	9×10^{0}
Pr-144	NA	--	--	--	--
Nd-147	1×10^{1}	6×10^{0}	6×10^{-4}+	--	5×10^{0}
Pm-147	2×10^{0}	5×10^{-1}	2×10^{-3}+	--	2×10^{0}
Eu-155	1×10^{0}	8×10^{-1}	2×10^{-3}+	--	7×10^{-1}
Ta-182	7×10^{-1}	2×10^{0}	4×10^{-4}+	--	7×10^{-1}
Pu-239	3×10^{-4}	5×10^{-5}+	3×10^{-4}	--	2×10^{-4}
Pu-240	3×10^{-4}	5×10^{-5}+	3×10^{-4}	--	2×10^{-4}
Pu-241	2×10^{-2}	2×10^{-3}+	1×10^{-2}	--	1×10^{-2}
Pu-242	4×10^{-4}	5×10^{-5}+	3×10^{-4}	--	3×10^{-4}

*MPC_w for soluble compounds

**MPC for insoluble compounds used for all elements except I_2, Cs and Na. CRBRP releases of I_2, Cs and Na will be in soluble form only.

+MPC_w in 10 CFR 20, Table II, column 2 is based upon a maximum permissible dose 1/10 of the occupational exposure levels reported in ICRP-2[5]

(Continued)

TABLE 5.3A-4 (Continued)

++Calculated from data presented in a report by Gamertsfelder, C. C., Statement on the Selection of as Low as Practicable Design Objectives and Technical Specifications for the Operation of Light Water Cooled Nuclear Power Reactors, U.S. AEC, Docket No. RM 50-2, Washington, D. C.

∇MPC_W presented in 10 CFR 20, Table II, column 2 is based upon a maximum permissible dose of 1,500 mrem to a child thyroid. MPC_W in above table is from ICRP-2.

NA - Not available.

TABLE 5.3A-5

DOSE CONVERSION FACTORS* FOR EXPOSURE VIA INGESTION OF WATER
TO RADIOACTIVE MATERIALS RELEASED FROM THE CRBRP RADWASTE SYSTEMS
mrem/yr per μCi/cc

Isotope	Whole Body	Bone	GI Tract**	Thyroid (adult)	Kidney
H-3	1.0×10^5	--	--	--	--
Na-22	1.3×10^7	--	5.0×10^6	--	--
Na-24	1.3×10^6	--	7.5×10^6	--	--
Cr-51	2.5×10^4	--	7.5×10^5	3.0×10^4	7.5×10^3
Mn-54	6.3×10^5	--	1.5×10^7	--	--
Fe-59	2.5×10^6	3.0×10^6	3.0×10^7	--	--
Co-58	1.3×10^6	--	1.7×10^7	--	2.1×10^5
Co-60	5.0×10^6	--	5.0×10^7	--	5.0×10^5
Sr-89	7.1×10^6	1.5×10^8	5.0×10^7	--	--
Sr-90	1.3×10^9	3.0×10^9	3.8×10^7	--	--
Y-89m	NA	--	--	--	--
Y-90	1.7×10^2	7.5×10^3	7.5×10^7	--	--
Y-91	2.5×10^3	1.0×10^5	5.0×10^7	--	--
Zr-95	5.0×10^3	1.5×10^4	2.5×10^7	--	7.5×10^3
Nb-95	1.3×10^3	4.3×10^3	1.5×10^7	--	2.5×10^3
Mo-99	6.3×10^5	--	3.8×10^7	--	7.5×10^6

(Continued)

TABLE 5.3A-5 (Continued)

mrem/yr per μCi/cc

Isotope	Whole Body	Bone	GI Tract**	Thyroid (adult)	Kidney
Ru-103	6.3×10^4	1.5×10^5	1.9×10^7	--	5.0×10^5
Ru-106	2.5×10^5	3.0×10^6	1.5×10^8	--	3.8×10^6
Rh-106	NA	--	--	--	--
Ag-111	1.0×10^4	5.0×10^4	3.8×10^7	--	7.5×10^4
Sb-125	2.5×10^5	1.5×10^6	1.5×10^7	1.5×10^3	--
Te-129	1.0×10^4	3.0×10^4	1.9×10^6	3.0×10^4	1.5×10^5
Te-129m	2.5×10^6	1.0×10^7	7.5×10^7	3.8×10^6	3.8×10^7
Te-132	1.0×10^6	1.5×10^6	7.5×10^7	1.5×10^6	7.5×10^6
I-131	2.5×10^6	--	1.5×10^6	1.5×10^9	--
I-132	1.3×10^5	--	3.8×10^6	5.0×10^7	--
Cs-134	5.6×10^7	4.3×10^7	3.0×10^6	--	3.8×10^7
Cs-136	5.6×10^6	3.0×10^6	1.9×10^6	--	5.0×10^6
Cs-137	2.5×10^7	6.0×10^7	1.9×10^6	--	3.0×10^7
Ba-140	1.0×10^6	1.5×10^7	7.5×10^7	--	5.0×10^3
La-140	2.5×10^2	1.5×10^3	7.5×10^7	--	--
Ce-141	5.0×10^2	6.0×10^3	1.7×10^7	--	2.1×10^3
Ce-144	1.7×10^4	3.8×10^5	1.5×10^8	--	7.5×10^4

(Continued)

TABLE 5.3A-5 (Continued)

mrem/yr per μCi/cc

Isotope	Whole Body	Bone	GI Tract**	Thyroid (adult)	Kidney
Pr-143	5.0×10^2	7.5×10^3	3.0×10^7	--	1.7×10^3
Pr-144	NA	--	--	--	--
Nd-147	5.0×10^2	5.0×10^3	2.5×10^7	--	3.0×10^3
Pm-147	2.5×10^3	6.0×10^4	7.5×10^6	--	7.5×10^3
Eu-155	5.0×10^3	3.8×10^4	7.5×10^6	--	2.1×10^4
Ta-182	7.1×10^3	1.5×10^4	3.8×10^7	--	2.1×10^4
Pu-239	1.7×10^7	6.0×10^8	5.0×10^7	--	7.5×10^7
Pu-240	1.7×10^7	6.0×10^8	5.0×10^7	--	7.5×10^7
Pu-241	2.5×10^5	1.5×10^7	1.5×10^6	--	1.5×10^6
Pu-242	1.3×10^7	6.0×10^8	5.0×10^7	--	5.0×10^7

*Calculated from data tabulated in Table 5.3A-4, maximum permissible dose ÷ maximum permissible concentration in water, $\left(\frac{MPD}{MPC_W}\right)$

**MPC for insoluble compounds used for all elements except I_2, Cs and Na. CRBRP releases of I_2, Cs and Na will be in soluble form only.

NA - Not available

TABLE 5.3A-6

WHOLE BODY DOSE CONVERSION FACTORS FOR TRITIUM RELEASED DURING NORMAL OPERATING CONDITIONS[6]

Pathway	Infant	Adult
	(mrem/yr per μCi/cc)	
Inhalation and absorption	8.9×10^8	1.6×10^9
Vegetables, ingestion	2.0×10^9	1.6×10^9
Milk, ingestion	3.4×10^9	5.7×10^8
Meat, ingestion	3.0×10^8	7.2×10^8

TABLE 5.3A-7

DOSE CONVERSION FACTORS FOR TOTAL BODY AND SKIN EXPOSURE VIA IMMERSION IN WATER AND SHORELINE DEPOSITS[1]

Isotope	Immersion in Water Total Body (mrem/hr per pCi/l)	Immersion in Water Skin (mrem/hr per pCi/l)	Shoreline Deposits Total Body (mrem/hr per pCi/m^2)	Shoreline Deposits Skin (mrem/hr per pCi/m^2)
H-3	0	0	0	0
Na-22	4.0×10^{-6}	4.8×10^{-6}	1.6×10^{-8}	1.8×10^{-8}
Na-24	7.8×10^{-6}	9.3×10^{-6}	2.5×10^{-8}	2.9×10^{-8}
Ne-23	NA	NA	NA	NA
Ar-39	6.2×10^{-10}	1.3×10^{-7}	0	0
Ar-41	2.4×10^{-6}	3.2×10^{-6}	0	0
Cr-51	5.2×10^{-8}	6.4×10^{-8}	2.2×10^{-10}	2.6×10^{-10}
Mn-54	1.5×10^{-6}	1.8×10^{-6}	5.8×10^{-9}	6.8×10^{-9}
Fe-59	2.2×10^{-6}	2.9×10^{-6}	8.0×10^{-9}	9.4×10^{-9}
Co-58	1.8×10^{-6}	2.3×10^{-6}	7.0×10^{-9}	8.2×10^{-9}
Co-60	4.6×10^{-6}	5.4×10^{-6}	1.7×10^{-8}	2.0×10^{-8}
Kr-83m	3.1×10^{-9}	7.9×10^{-9}	0	0
Kr-85	4.7×10^{-9}	1.8×10^{-7}	0	0
Kr-85m	2.8×10^{-7}	5.1×10^{-7}	0	0
Kr-87	2.7×10^{-6}	4.6×10^{-6}	0	0
Kr-88	3.3×10^{-6}	4.1×10^{-6}	0	0
Sr-89	4.6×10^{-9}	5.4×10^{-7}	5.6×10^{-13}	6.5×10^{-13}
Sr-90	5.4×10^{-10}	1.5×10^{-7}	0	0
Y-89m	NA	NA	NA	NA
Y-90	1.3×10^{-8}	9.6×10^{-7}	2.2×10^{-12}	2.6×10^{-12}
Y-91	9.1×10^{-9}	5.6×10^{-7}	2.4×10^{-11}	2.7×10^{-11}
Zr-95	1.5×10^{-6}	1.8×10^{-6}	5.0×10^{-9}	5.8×10^{-9}
Nb-95	1.4×10^{-6}	1.6×10^{-6}	5.1×10^{-9}	6.0×10^{-9}
Mo-99*	4.7×10^{-7}	9.1×10^{-7}	1.9×10^{-9}	2.2×10^{-9}

(Continued)

TABLE 5.3A-7 (Continued)

Isotope	Immersion in Water Total Body (mrem/hr per pCi/l)	Immersion in Water Skin (mrem/hr per pCi/l)	Shoreline Deposits Total Body (mrem/hr per pCi/m^2)	Shoreline Deposits Skin (mrem/hr per pCi/m^2)
Ru-103*	8.9×10^{-7}	1.1×10^{-6}	4.2×10^{-9}	3.6×10^{-9}
Ru-106*	3.8×10^{-7}	1.9×10^{-6}	1.8×10^{-9}	1.5×10^{-9}
Rh-106	NA	NA	NA	NA
Ag-111	4.8×10^{-8}	3.8×10^{-7}	2.1×10^{-10}	1.8×10^{-10}
Sb-125	7.8×10^{-7}	9.5×10^{-7}	3.1×10^{-9}	3.5×10^{-9}
Te-129	1.9×10^{-7}	7.0×10^{-7}	7.1×10^{-10}	8.4×10^{-10}
Te-129m*	2.1×10^{-7}	7.4×10^{-7}	7.7×10^{-10}	9.0×10^{-10}
Te-132	4.0×10^{-7}	4.8×10^{-7}	1.7×10^{-9}	2.0×10^{-9}
I-131	6.8×10^{-7}	9.3×10^{-7}	2.8×10^{-9}	3.4×10^{-9}
I-132	4.4×10^{-6}	5.5×10^{-6}	1.7×10^{-8}	2.0×10^{-8}
Xe-131m	6.2×10^{-9}	5.6×10^{-8}	0	0
Xe-133	5.7×10^{-8}	1.1×10^{-7}	0	0
Xe-133m	6.0×10^{-8}	1.0×10^{-7}	0	0
Xe-135	4.5×10^{-7}	7.9×10^{-7}	0	0
Xe-135m	7.6×10^{-7}	1.0×10^{-6}	0	0
Xe-138	2.6×10^{-6}	3.4×10^{-6}	0	0
Cs-134	2.9×10^{-6}	3.5×10^{-6}	1.2×10^{-8}	1.4×10^{-8}
Cs-136	5.6×10^{-6}	4.9×10^{-6}	1.5×10^{-8}	1.7×10^{-8}
Cs-137	1.0×10^{-6}	1.4×10^{-6}	4.2×10^{-9}	4.9×10^{-9}
Ba-140	4.9×10^{-7}	7.6×10^{-7}	2.1×10^{-9}	2.4×10^{-9}
La-140	4.1×10^{-6}	5.3×10^{-6}	1.5×10^{-8}	1.7×10^{-8}
Ce-141	1.3×10^{-7}	2.4×10^{-7}	5.5×10^{-10}	6.2×10^{-10}
Ce-144*	8.6×10^{-8}	1.4×10^{-6}	3.2×10^{-10}	3.7×10^{-10}
Pr-143	1.6×10^{-9}	2.8×10^{-7}	0	0
Pr-144	5.6×10^{-7}	1.3×10^{-6}	2.0×10^{-10}	2.3×10^{-10}
Nd-147	2.8×10^{-7}	5.0×10^{-7}	1.0×10^{-9}	1.2×10^{-9}
Pm-147	7.5×10^{-11}	1.3×10^{-8}	0	0

(Continued)

TABLE 5.3A-7 (Continued)

Isotope	Immersion in Water Total Body (mrem/hr per pCi/l)	Immersion in Water Skin (mrem/hr per pCi/l)	Shoreline Deposits Total Body (mrem/hr per pCi/m^2)	Shoreline Deposits Skin (mrem/hr per pCi/m^2)
Eu-155	NA	NA	NA	NA
Ta-182	NA	NA	NA	NA
Pu-239	1.2×10^{-10}	1.7×10^{-9}	7.9×10^{-13}	7.7×10^{-12}
Pu-240	1.4×10^{-10}	4.0×10^{-9}	1.3×10^{-12}	1.8×10^{-11}
Pu-241*	6.1×10^{-11}	9.5×10^{-11}	4.6×10^{-12}	6.8×10^{-12}
Pu-242	1.1×10^{-10}	3.6×10^{-9}	1.1×10^{-12}	1.6×10^{-11}

*Includes contribution from daughter products

NA - Not available

TABLE 5.3A-8

ENVIRONMENTAL HALF-LIVES OF RADIOISOTOPES
RELEASED FROM CRBRP RADWASTE SYSTEMS

Isotope	Environmental Half-Life (Days)
H-3	14.0
Na-22	13.4
Na-24	0.6
Ne-23	4.4×10^{-4}
Ar-39	14.0
Ar-41	0.1
Cr-51	9.3
Mn-54	13.4
Fe-59	10.7
Co-58	11.7
Co-60	13.9
Kr-83m	0.1
Kr-85	14.0
Kr-85m	0.2
Kr-87	0.5
Kr-88	0.1
Sr-89	11.1
Sr-90	14.0
Y-89m	1.9×10^{-4}
Y-90	2.2
Y-91	11.3
Zr-95	11.5
Nb-95	10.0
Mo-99	2.3
Ru-103	10.3
Ru-106	13.5

(Continued)

TABLE 5.3A-8 (Continued)

Isotope	Environmental Half-Life (Days)
Rh-106	3.5×10^{-4}
Ag-111	4.9
Sb-125	13.8
Te-129	0.05
Te-129m	9.9
Te-132	2.6
I-131	5.1
I-132	0.1
Xe-131m	6.4
Xe-133	3.8
Xe-133m	1.9
Xe-135	5.6
Xe-135m	7.4
Xe-138	1.0×10^{-3}
Cs-134	13.7
Cs-136	6.9
Cs-137	14.0
Ba-140	6.7
La-140	1.5
Ce-141	9.8
Ce-144	13.3
Pr-143	6.9
Pr-144	0.02
Nd-147	6.2
Pm-147	13.8
Eu-155	13.7
Ta-182	14.0

(Continued)

TABLE 5.3A-8 (Continued)

Isotope	Environmental Half-Life (Days)
Pu-239	14.0
Pu-240	14.0
Pu-241	14.0
Pu-242	14.0

TABLE 5.3A-9

EFFECTIVE HALF-LIVES[5] OF RADIOISOTOPES RELEASED FROM CRBRP RADWASTE SYSTEMS

Isotope	Effective Half-Life (Days)
H-3	12.0
Na-22	11.0
Na-24	NA
Ne-23	NA
Ar-39	NA
Ar-41	NA
Cr-51	26.6
Mn-54	5.6
Fe-59	42.7
Co-58	8.4
Co-60	1.9×10^3
Kr-83m	NA
Kr-85	NA
Kr-85m	NA
Kr-87	NA
Kr-88	NA
Sr-89	50.3
Sr-90	5.7×10^3
Y-89m	NA
Y-90	2.7
Y-91	58.0
Zr-95	59.0
Nb-95	33.5
Mo-99	1.8

(Continued)

TABLE 5.3A-9 (Continued)

Isotope	Effective Half-Life (Days)
Ru-103	6.2
Ru-106	7.2
Rh-106	7.2
Ag-111	3.0
Sb-125	36.0
Te-129	5.1×10^{-2}
Te-129m	10.0
Te-132	2.9
I-131	3.7
I-132	0.1
Xe-131m	NA
Xe-133	NA
Xe-133m	NA
Xe-135	NA
Xe-135m	NA
Xe-138	NA
Cs-134	65.0
Cs-136	11.0
Cs-137	70.0
Ba-140	4.2
La-140	1.7
Ce-141	30.0
Ce-144	1.9×10^{2}
Pr-143	13.5
Pr-144	NA
Nd-147	11.1
Pm-147	3.8×10^{2}
Eu-155	3.1×10^{2}
Ta-182	76.0

(Continued)

TABLE 5.3A-9 (Continued)

Isotope	Effective Half-Life (Days)
Pu-239	6.4×10^4
Pu-240	6.3×10^4
Pu-241	4.5×10^3
Pu-242	6.5×10^4

NA - Not available

TABLE 5.3A-10

EFFECTIVE ABSORBED BETA AND GAMMA ENERGIES IN FINITE VOLUMES OF MUSCLE TISSUE[1]

MeV/dis

Effective Radius* (cm)	1.4	2.0	3.0	5.0	7.0	10.0	20.0	30.0
Isotope								
H-3	0.01	0.01	0.01	0.01	0.01	0.01	0.01	0.01
Na-22	0.286	0.325	0.387	0.507	0.619	0.775	1.20	1.51
Na-24	0.712	0.771	0.868	1.05	1.23	1.48	2.19	2.74
Ne-23	--	--	--	NA	--	--	--	--
Ar-39	0.194	0.194	0.194	0.194	0.194	0.194	0.194	0.194
Ar-41	0.519	0.541	0.576	0.642	0.705	0.793	1.04	1.22
Cr-51	0.00222	0.00276	0.00363	0.00529	0.00685	0.00901	0.0149	0.0191
Mn-54	0.0364	0.0514	0.0758	0.122	0.166	0.227	0.392	0.512
Fe-59	0.171	0.191	0.224	0.286	0.346	0.428	0.655	0.824
Co-58	0.0728	0.0905	0.119	0.174	0.226	0.297	0.492	0.633
Co-60	0.195	0.237	0.306	0.437	0.560	0.732	1.21	1.56
Kr-83m	0.0438	0.0438	0.0438	0.0438	0.0438	0.0438	0.0438	0.0438
Kr-85	0.224	0.224	0.224	0.224	0.224	0.225	0.225	0.225
Kr-85m	0.245	0.248	0.252	0.260	0.268	0.279	0.309	0.331
Kr-87	1.21	1.24	1.27	1.34	1.41	1.50	1.77	1.97
Kr-88	0.449	0.475	0.517	0.599	0.677	0.786	1.09	1.33
Sr-89	0.564	0.564	0.564	0.564	0.564	0.564	0.564	0.564

(Continued)

TABLE 5.3A-10 (Continued)

MeV/dis

Effective Radius* (cm)	1.4	2.0	3.0	5.0	7.0	10.0	20.0	30.0
Sr-90	1.14	1.14	1.14	1.14	1.14	1.14	1.14	1.14
Y-89m	--	--	--	NA	--	--	--	--
Y-90	0.939	0.939	0.939	0.939	0.939	0.939	0.939	0.939
Y-91	0.590	0.590	0.591	0.591	0.591	0.591	0.592	0.592
Zr-95	0.227	0.254	0.297	0.380	0.458	0.565	0.857	1.07
Nb-95	0.0767	0.0906	0.113	0.156	0.197	0.253	0.405	0.515
Mo-99**	0.419	0.423	0.430	0.444	0.457	0.475	0.524	0.561
Ru-103**	0.116	0.125	0.140	0.168	0.194	0.230	0.328	0.399
Ru-106**	1.44	1.44	1.45	1.46	1.47	1.49	1.53	1.56
Rh-106	--	--	--	NA	--	--	--	--
Ag-111	0.361	0.362	0.362	0.364	0.365	0.367	0.372	0.376
Sb-125	0.105	0.113	0.126	0.156	0.173	0.205	0.291	0.353
Te-129	0.535	0.538	0.541	0.548	0.555	0.563	0.585	0.601
Te-129m**	0.599	0.601	0.605	0.612	0.619	0.627	0.651	0.667
Te-132	0.121	0.125	0.131	0.143	0.154	0.169	0.211	0.242
I-131	0.206	0.213	0.224	0.245	0.266	0.293	0.360	0.422
I-132	0.581	0.624	0.693	0.826	0.950	1.12	1.59	1.94
Xe-131m	0.136	0.136	0.136	0.137	0.137	0.137	0.138	0.139
Xe-133	0.137	0.137	0.138	0.140	0.141	0.143	0.148	0.152
Xe-133m	0.176	0.177	0.178	0.180	0.182	0.184	0.191	0.196
Xe-135	0.330	0.335	0.342	0.355	0.368	0.386	0.434	0.469
Xe-135m	0.118	0.126	0.139	0.163	0.186	0.217	0.302	0.363

(Continued)

TABLE 5.3A-10 (Continued)

MeV/dis

Effective Radius* (cm)	1.4	2.0	3.0	5.0	7.0	10.0	20.0	30.0
Xe-138	0.505	0.527	0.562	0.630	0.694	0.784	1.04	1.23
Cs-134	0.230	0.259	0.306	0.396	0.480	0.596	0.913	1.14
Cs-136	0.233	0.273	0.337	0.458	0.573	0.732	1.17	1.49
Cs-137	0.257	0.267	0.284	0.316	0.346	0.388	0.509	0.582
Ba-140	0.315	0.320	0.328	0.343	0.357	0.376	0.428	0.465
La-140	0.698	0.734	0.793	0.907	1.01	1.16	1.58	1.89
Ce-141	0.173	0.174	0.175	0.179	0.182	0.187	0.199	0.209
Ce-144**	1.32	1.32	1.32	1.33	1.33	1.33	1.34	1.35
Pr-143	0.314	0.314	0.314	0.314	0.314	0.314	0.314	0.314
Pr-144	1.23	1.23	1.23	1.24	1.24	1.24	1.24	1.25
Nd-147	0.257	0.259	0.264	0.272	0.280	0.291	0.320	0.342
Pm-147	0.0620	0.0620	0.0620	0.0620	0.0620	0.0620	0.0620	0.0620
Eu-155	--	--	--	NA	--	--	--	--
Ta-182	--	--	--	NA	--	--	--	--
Pu-239	51.5	51.5	51.5	51.5	51.5	51.5	51.5	51.5
Pu-240	51.6	51.6	51.6	51.6	51.6	51.6	51.6	51.6
Pu-241**	0.00636	0.00636	0.00636	0.00636	0.00636	0.00636	0.00636	0.00636
Pu-242	48.9	48.9	48.9	48.9	48.9	48.9	48.9	48.9

*Effective radius may be calculated from the mass of the organism using the following relationship:

$ER = 10.0\ M^{0.292516}$ where: ER = effective radius, cm
M = mass of the organism, kg

**Includes contribution from daughter products

NA - Not available

TABLE 5.3A-11

FRACTION OF INGESTED RADIOISOTOPE RETAINED IN THE WHOLE BODY OF AN ORGANISM FEEDING ON CONTAMINATED FOOD[5]

Isotope	Fraction Retained
H-3	1.0
Na-22	1.0
Na-24	1.0
Ne-23	1.0
Ar-39	1.0
Ar-41	1.0
Cr-51	0.005
Mn-54	0.1
Fe-59	0.013
Co-58	0.3
Co-60	0.3
Kr-83m	1.0
Kr-85	1.0
Kr-85m	1.0
Kr-87	1.0
Kr-88	1.0
Sr-89	0.3
Sr-90	0.3
Y-89m	1×10^{-4}
Y-90	1×10^{-4}
Y-91	1×10^{-4}
Zr-95	1×10^{-4}
Nb-95	1×10^{-4}
Mo-99	0.8
Ru-103	0.03
Ru-106	0.03
Rh-106	0.2
Ag-111	0.01

(Continued)

TABLE 5.3A-11 (Continued)

Isotope	Fraction Retained
Sb-125	0.03
Te-129	0.25
Te-129m	0.25
Te-132	0.25
I-131	1.0
I-132	1.0
Xe-131m	1.0
Xe-133	1.0
Xe-133m	1.0
Xe-135	1.0
Xe-135m	1.0
Xe-138	1.0
Cs-134	1.0
Cs-136	1.0
Cs-137	1.0
Ba-140	0.05
La-140	1×10^{-4}
Ce-141	1×10^{-4}
Ce-144	1×10^{-4}
Pr-143	1×10^{-4}
Pr-144	1×10^{-4}
Nd-147	1×10^{-4}
Pm-147	1×10^{-4}
Eu-155	1×10^{-4}
Ta-182	1×10^{-4}
Pu-239	1×10^{-5}
Pu-240	1×10^{-5}
Pu-241	1×10^{-5}
Pu-242	1×10^{-5}

TABLE 5.3A-12

WATER BODY WIDTH FACTORS FOR ESTIMATING GAMMA EXPOSURE FROM CONTAMINATED SEDIMENT[1]

Width Factor	Exposure Situation
0.1	Discharge canal bank
0.2	Riverbank
0.3	Lakeshore
0.5	Nominal ocean site
1.0	Tidal basin
2.0	Crustacea or shellfish

TABLE 5.3A-13

BIOACCUMULATION FACTORS FOR FRESHWATER AQUATIC FOODS[1]

Isotope	Fish	Crustacea-Mollusks	Algae	Plants*
H-3	1	1	1	1
Na-22	100	200	500	50
Na-24	100	200	500	50
Ne-23	NA	NA	NA	NA
Ar-39	1	1	1	1
Ar-41	1	1	1	1
Cr-51	20	2,000	4,000	400
Mn-54	400	90,000	10,000	1,000
Fe-59	100	3,200	1,000	100
Co-58	50	200	200	20
Co-60	50	200	200	20
Kr-83m	1	1	1	1
Kr-85	1	1	1	1
Kr-85m	1	1	1	1
Kr-87	1	1	1	1
Kr-88	1	1	1	1
Sr-89	30	100	500	50
Sr-90	30	100	500	50
Y-89m	25	1,000	5,000	500
Y-90	25	1,000	5,000	500
Y-91	25	1,000	5,000	500
Zr-95	330	7	1,000	100
Nb-95	30,000	100	800	80
Mo-99	10	10	1,000	100
Ru-103	10	300	2,000	200
Ru-106	10	300	2,000	200
Rh-106	10	300	200	20

(Continued)

TABLE 5.3A-13 (Continued)

Isotope	Fish	Crustacea-Mollusks	Algae	Plants*
Ag-111	2	770	200	20
Sb-125	1	10	1,500	150
Te-129	400	75	100	10
Te-129m	400	75	100	10
Te-132	400	75	100	10
I-131	15	5	40	4
I-132	15	5	40	4
Xe-131m	1	1	1	1
Xe-133	1	1	1	1
Xe-133m	1	1	1	1
Xe-135	1	1	1	1
Xe-135m	1	1	1	1
Xe-138	1	1	1	1
Cs-134	2,000	100	500	50
Cs-136	2,000	100	500	50
Cs-137	2,000	100	500	50
Ba-140	4	200	500	50
La-140	25	1,000	5,000	500
Ce-141	1	1,000	4,000	400
Ce-144	1	1,000	4,000	400
Pr-143	25	1,000	5,000	500
Pr-144	25	1,000	5,000	500
Nd-147	25	1,000	5,000	500
Pm-147	25	1,000	5,000	500
Eu-155	25	1,000	5,000	500
Ta-182	NA	NA	NA	NA

(Continued)

TABLE 5.3A-13 (Continued)

Isotope	Fish	Crustacea-Mollusks	Algae	Plants*
Pu-239	4	100	350	35
Pu-240	4	100	350	35
Pu-241	4	100	350	35
Pu-242	4	100	350	35

*Plants are assumed to contain 1/10 as much radioactivity as would be predicted using bioaccumulation factors for algae.

TABLE 5.3A-14

SUMMARY OF VARIABLES USED IN RADIOLOGICAL DOSE EVALUATIONS WHICH ARE NOT SPECIFIC TO THE CRBRP

Variable	Description	Measurement
Ingestion of Leafy Vegetables		
VDW	Deposition velocity of isotope over water	Noble gases, 0.5×10^{-7} cm/sec[7] H-3, 5 cm/sec[8,9]
YC	Yield per unit of cultivated land area for leafy vegetables	1.5 kg/m^2[10]
TGS	Growing season of leafy vegetables	3 months[1]
VDL	Deposition velocity of isotope over land	Noble gases, 0.5×10^{-7} cm/sec[7] H-3, 1.4 cm/sec[6]
TLV	Total daily intake of leafy vegetables	0.2 kg/day[1]
TDL	Elapsed time between harvest and ingestion	7 days[11]
T_b	Weathering half-life of isotopes on leafy vegetables	14 days[10,12]
FLI	Fractional retention of isotope on vegetation leaves	0.1[11]
FA	Average fraction of the ground surface covered by leafy vegetables	0.25[1]
FRI	Transfer coefficient for soil to plant via roots	Element — Coefficient[10,13] Fe — 1.5×10^{-4} Sr — 3.2×10^{-1} Ru — 3.8×10^{-3} Cs — 1.9×10^{-2} Ce — 7.5×10^{-4} Pu — 1.0×10^{-4}

(Continued)

TABLE 5.3A-14 (Continued)

Variable	Description	Measurement
FSI	Fraction of isotope which reaches soil	0.75[1]
R	Rate of ingestion of vegetation	Rabbit, 100 g/day[10]
Ingestion of Beef		
G	Effective grazing area of cattle	20-80 m^2/day[14]
$SUMFT_B$	Total cumulative fraction of isotope transferred per kg of beef	1.0/kg for H-3[10] 0.2/kg for Cs[15] 0.05/kg for Sr[15]
TB	Total daily human intake of beef	0.4 kg/day[10]
TDB	Elapsed time between butchering and ingestion	20 days[10]
Ingestion of Aquatic Foods		
G_F	Rate of ingestion of aquatic food for man	50 g/day - freshwater fish (max. for adult)[1]
P	Rate of ingestion of aquatic foods for biota other than man	Ducks, surface feeding - 100 g/day of plants[16] Ducks, diving - 100 g/day of fish[16] Mink - 50 g/day of fish and 50 g/day of invertebrates[16]
MS	Average mass of organism feeding on aquatic food	Ducks - 1 kg[1,16] Mink - 1 kg[16] Muskrat - 1 kg[1] Raccoon - 12 kg[1] Heron - 4.6 kg[1]

(Continued)

TABLE 5.3A-14 (Continued)

Variable	Description	Measurement
	Average effective radius of organisms feeding on aquatic food	Ducks - 5 cm[1] Mink - 10 cm[16] Rabbit - 10 cm[16] Muskrat - 6 cm[1] Raccoon - 14 cm[1] Heron - 11 cm[1]
M	Average mass of aquatic organism	Fish - 1 kg[16] Invertebrates - 0.005 kg[16] Plant - 0.005 kg[16]
	Average effective radius of aquatic organism	Fish - 10 cm[16] Invertebrates - 2 cm[16] Plant - 2 cm[16]
Exposure Via Above-Water Activities		
TI	Time spent immersed in effluent water	100 hr/yr[1]
TAW	Time spent in above water activities	Boating - 100 hr/yr[1] Shoreline activities - 500 hr/yr[1]
Ingestion of Milk		
SUMFT	Accumulative fractional intake of isotope per liter which is transferred to the milk each day	2.0×10^{-2}/l for H-3[10]

14.5 APPENDIX TO SECTION 10.1

APPENDIX TO SECTION 10.1

ATMOSPHERIC EFFECTS OF ALTERNATIVE COOLING SYSTEMS

DATA USED IN THE ANALYSIS

Cooling tower characteristics and parameters pertinent to the environmental analysis are listed in Table 10.1A-1. Tower height, exit radius, exit velocity as well as ambient and exit temperatures are used in the determination of the plume rise for the various cooling systems under consideration. Evaporation and drift losses are used as source terms in the calculations. Full power plant operation throughout the year is assumed.

Wind speed values used in the calculations are developed from meteorological data available for Station X-10 and for the CRBRP. The mean wind speeds for various Pasquill Stability Classes are listed in Table 10.1A-2.

Temperature humidity frequencies generated from data available from TVA's Bull Run Steam Plant are summarized in Table 10.1A-3.

Plume rise for various cooling system alternatives is calculated using Briggs' equations, as discussed in MODELS USED IN ANALYSIS. Modifications recently suggested by Briggs for multiple sources[1] are utilized. Table 10.1A-4 gives plume rise values for the extreme temperatures under consideration. Plume heights change as much as 80 percent depending on atmospheric conditions. Due to lower exit velocity for the wet/dry mechanical draft cooling towers, effective stack heights are smaller than those of the mechanical draft wet cooling towers.

EFFECTS OF COOLING TOWER PLUME AND DRIFT

Visible vapor plumes, ground fog and icing are estimated for the five alternative cooling towers: (1) natural draft wet cooling tower; (2) mechanical draft wet cooling tower, linear array; (3) mechanical draft wet cooling tower, circular array; (4) mechanical draft wet/dry cooling tower, circular array, with 30 percent plume severity; and (5) mechanical draft wet/dry cooling tower, circular array, with zero percent plume severity. To assess objectively the atmospheric impact of each of the cooling systems under consideration, calculations are made for each alternative using most probable atmospheric conditions (ambient temperatures, relative humidities and atmospheric stabilities) as well as adverse conditions which would most likely produce long visible vapor plumes and ground fog from wet cooling systems. The calculations are made on a comparative basis for all cooling systems under consideration. The analytical equations used in the various calculations are given in the MODELS USED IN ANALYSIS section.

Visible Plumes

The length of visible plumes, shown in Table 10.1A-5, from the five alternative tower configurations at the CRBRP Site are calculated for the meteorological conditions when the atmosphere is unable to hold much additional moisture. In very cold weather (zero and subzero temperatures) and high relative humidities (>80%), plumes can attain long lengths in stable air with little occurrence of ground fog. Such situations are most likely to occur during the winter between midnight to early morning.

Boundaries of visible water vapor plumes for various cooling systems for very unstable (A), unstable (B), slight unstable (C), neutral (D), slightly stable (E), stable (F) and atmospheric conditions are evaluated. The frequency of occurrence of a visible

plume of ≥300 feet in length for all systems under consideration is estimated at about 58 percent of all hours in a year (5,095) in all directions for the six atmospheric stabilities and temperature and humidity conditions. The frequency distribution of visible plume in 16 directions is summarized in Table 10.1A-6. The south to west section will experience the highest probability of visible plume occurrence (1,763 hours), followed by the north to east sector (1,606 hours), west to north sector (678 hours) and east to south sector (430 hours).

Effluents from natural draft cooling towers are released at high elevations with a low degree of initial turbulence; their high buoyancy and momentum are retained longer due to the lower dilution with the ambient air. The net result is a relatively high plume rise. In contrast, mechanical draft cooling tower plumes originate at lower elevations with a high degree of initial turbulence and lower buoyancy resulting in a much lower plume rise. With the clustering of cells in a cooling tower, however, a reduction in the rate of entrainment of the plume and ambient air is anticipated due to the nature of the system. Therefore, the plumes attain a higher rise than in the single cell arrangement.[1] The results indicate that visible plumes from natural draft wet cooling towers are the longest ones followed by visible plumes from mechanical draft wet cooling towers (linear and circular arrays) and mechanical draft wet/dry cooling towers (30% and 0% plume severity). The length of natural draft wet cooling tower plumes exceed those of mechanical draft wet towers by about 10 percent to 387 percent and those of mechanical draft wet/dry towers by about 33 percent to 493 percent depending on atmospheric conditions.

Except for visual impact, the visible plumes do not reach airports in the plant vicinity. Further, the density of the plumes from

the wet/dry cooling systems is less than those from the wet cooling systems resulting in a small reduction in horizontal ground visibility.[2]

Ground Fog and Icing

As discussed earlier, the effective height of natural draft cooling tower vapor plumes are greater than those of a mechanical draft cooling tower. Hence, the probability for a natural draft cooling tower vapor plume to intercept the ground is much smaller than that from mechanical draft cooling towers. A skilled use of a mechanical draft wet/dry tower, however, can reduce significantly the ground fog potential.

Calculations indicate that ground fog in the CRBRP vicinity will occur for both the mechanical draft wet cooling tower and mechanical draft wet/dry cooling tower; however, the density of ground fog from the wet/dry towers will be less. Table 10.1A-7 through Table 10.1A-10 give the extent of ground fog and its occurrence for representative atmospheric conditions for those towers which will produce fog. Table 10.1A-11 gives ground fogging potential at different locations for elevated terrain.

Areas which may be adversely affected by ground fog and icing include the Gallaher Bridge, the ORNL building complex and Interstate 40. All are located at the same height as the CRBRP and are not shielded by elevated terrain. Other areas likely to be affected by ground fog are located at elevated terrain such as Hood Ridge, Dug Ridge, Chestnut Ridge and Moore Ridge. The predicted numbers of ground fog hours for these locations are listed in Tables 10.1A-12 and 10.1A-13. Since most of the potential ground fogging will occur around zero degrees C, it will be accompanied by a thin layer of rime ice which will form on objects downwind of the cooling tower.

The main buildings at the CRBRP are located to the northwest of the cooling tower at a distance of about 50 meters (m). When winds are from the south, the plume will be forced downwind toward the main plant buildings due to the low pressure cavity effect caused by wind movement around the cooling tower structure. The same argument is valid for the switchyard located approximately 150 m north of the towers. Since the buildings and switchyard locations are tentative, a complete analysis will have to await a final decision regarding their specific locations. Fogging and icing problems will occur with the mechanical draft towers (not the natural draft tower).

Any fog with attendent visibility reduction increases the chance for motor vehicle accidents on heavily traveled highways. Interstate 40, in the vicinity of Caney Creek, would experience about 0.7 hrs/yr of severe ground fog or icing (horizontal visibility of 1/10 mile or less) and 0.8 hrs/yr of dense fog or icing (horizontal visibility of 1/4 mile or less) from the mechanical draft wet cooling tower (linear array) and 0.5 hrs/yr of severe ground fog or icing and 0.8 hrs/yr of dense fog or icing from the mechanical draft wet cooling tower (circular array) for the atmospheric conditions under consideration. For the same atmospheric conditions, no severe ground fog or icing and less than 0.1 hr/yr of dense fog or icing are anticipated from the mechanical draft wet/dry cooling tower (0% and 30% circular arrays). This frequency of ground fog is considered minimal. The ORNL buildings are outside the fogging area of the cooling towers under consideration as shown on Table 10.1A-12. Some areas at the elevated terrain will experience a small duration of ground fog. These, however, are not inhabited areas.

No airports are within the fogging or icing area of the cooling towers under consideration.

Drift Deposition

Total drift rates for each of the cooling systems under consideration vary according to the type of system. Values are listed in Table 10.1A-1. The concentration of the total dissolved solids (TDS) in the circulating water is 375 ppm.

Two stability classes were chosen for the calculations, C and D, with wind speed of about 3.4 m/sec. These stability classes occur most frequently during the year and drift deposition computed from them will be representative of typical anticipated values. The plume rise of the drift droplets with a relative humidity of 95 percent is given in Table 10.1A-14. Size range of drift droplets is the mean of the four curves shown in Figure 10.1A-1. The Westinghouse model, discussed in the MODELS USED IN ANALYSIS section, was used in the calculations and the results are summarized in Tables 10.1A-15 through 10.1A-19. Results are given as a function of the wind direction for the maximum deposition distance. For stability C the maximum ground level deposition rates are to the south-southwest with the highest value, 88.75 lb/acre-month, for the mechanical draft wet linear tower. For stability class D the maximum ground level deposition rates occur north-northeast of the Site with the highest value, 75.31 lb/acre-month, for the mechanical draft wet linear tower. Under stable atmospheric conditions, gravity forces exceed turbulent transport resulting in an increased deposition rate. If, for example, the amount of chloride in the cooling water is considered (about 10 percent of the total dissolved solids), the maximum deposition levels are 8.88 lb/acre-month for stability C and 7.53 lb/acre-month for stability F. These levels are well below those that can cause damage to crops and are subject to further reductions as ambient relative humidities of 95 percent or greater occur approximately five percent of the year.

Generally the drift deposition levels are the smallest for natural draft wet cooling towers followed in increasing order by mechanical draft wet/dry cooling towers (linear and circular array) and mechanical draft wet cooling towers (linear and circular array). Recent calculations made for various cooling systems with the same cooling capacity indicate that drift rate from mechanical draft wet cooling towers exceeds that of natural draft cooling towers by about a factor of four to five and that of mechanical draft wet/dry cooling towers by about a factor of two to three.[3]

MODELS USED IN ANALYSIS

Visible Water Vapor Plumes

The dispersion of the water vapor plume downwind of a cooling tower is calculated from the Gaussian equation:

$$C(x,y,z,h_e) = \frac{Q}{2\pi\sigma_y\sigma_z\bar{u}} \exp\left[-\frac{1}{2}\frac{y^2}{\sigma_y^2}\right] x$$

$$\left\{\exp\left[-\frac{(z-h_e)^2}{2\sigma_z^2}\right] + \exp\left[-\frac{1}{2}\left(\frac{(z+h_e)^2}{\sigma_z^2}\right)\right]\right\}$$

where,

$C(x,y,z,h_e)$ = Excess water vapor concentration at a point in space x, y, z, g/m^3

Q = Release rate of water vapor, g/sec

σ_y = Horizontal dispersion parameter, m

σ_z = Vertical dispersion parameter, m

h_e = Effective plume rise, equal to tower height plus plume rise, m

$\bar{u}$ = Mean wind speed, m/sec.

Plume rise is calculated for unstable and neutral atmospheres by an equation developed by Briggs:[4]

$$\Delta h = 1.6 \frac{F^{1/3}}{\bar{u}} (3X^*)^{2/3}$$

where,

Δh = Plume rise above stack top, meters

F = Buoyancy flux parameter, m^4/sec^3

$\bar{u}$ = Wind speed, m/sec

X^* = Distance where atmospheric turbulence dominates entrainment, m.

The expressions for F and X* are:

$$F = gW_oR_o^2 \left(\frac{T_p - T_a}{T_a} \right) = gW_oR_o^2 \left(\frac{\rho_a - \rho_p}{\rho_a} \right)$$

and

$$X^* = 2.16\ F^{2/5}\ h_s^{3/5}$$

where,

g = Gravitational acceleration, 9.81 m/sec^2

W_o = Efflux speed of gas from the stack, m/sec

R_o = Internal stack radius, m

T_p = Average temperature of the gas emitted from the stack, °K

T_a = Average temperature of ambient air, °K

ρ_p = Density of the gas emitted from the stack, kg/m^3

ρ_a = Density of ambient air, kg/m^3

h_s = Physical stack height, m.

In stable atmospheres, Briggs' equation 5.7 is used:[4]

$$\Delta h = 2.9\left(\frac{F}{us}\right)^{1/3}$$

where,

s = Atmospheric stability parameter, sec^{-2}.

The atmospheric stability parameter s is expressed as:

$$s = \frac{g}{\Theta}\ \frac{\partial\Theta}{\partial z}$$

where,

Θ = Vertical potential temperature gradient, °C/m.

The vertical potential temperature gradient is given by:

$$\frac{\partial\Theta}{\partial z} = \frac{\partial T}{\partial z} - \Gamma = \frac{\partial T}{\partial z} + 0.01\ °C/m$$

where,

Γ = Dry adiabatic lapse rate of the atmosphere, -0.01 °C/m.

Based upon above equations, it is found that s is equal to $3.3 \times 10^{-4}\ sec^{-2}$ for an isothermal atmosphere and $8.8 \times 10^{-4}\ sec^{-2}$ for thermal inversion of 1.5 °C/100 m.

Through recent work by Briggs, an enhancement term is added to the calculation of plume rise.[1] This accounts for the added buoyancy that nearby cells from a cluster will obtain, thus increasing plume rise. The enhanced plume rise developed by Briggs is derived from the following equation:

$$\Delta H = \Delta h \left[\frac{N + 6.0\left[\frac{(N-1)(S)}{N^{1/3}\,\Delta h}\right]^{1.5}}{1.0 + 6.0\left[\frac{(N-1)(S)}{N^{1/3}\,\Delta h}\right]^{1.5}} \right]^{1/3}$$

where,

ΔH = Enhanced plume rise above stack top, m

Δh = Plume rise above stack top, m

N = Number of stacks in unit

S = Spacing between cells on a linear array or outside diameter of a clustered array, m.

The boundaries of the visible water vapor plume are determined as follows:

At a given temperature and humidity condition the ambient moisture content is given by C_a g/m^3. Under the same temperature conditions the moisture content at saturation is given by C_s g/m^3. The water vapor plume is visible when

$$C - (C_s - C_a) \geq 0$$

e. g., when the ambient moisture added to that from the cooling tower equals to exceeds the saturation value. Isopleths of the values

$$C = (C_s - C_a)$$

yield, therefore, the boundary of the visible plume for various atmospheric conditions.

Deposition Model For Drift From Cooling Tower

Drift deposition from cooling towers can be calculated using a Westinghouse model developed by Roffman and Grimble, 1973.[5] This model incorporates a diffusion type equation that describes the spatial rate of change in droplet concentration as a function of their radii, atmospheric conditions (such as relative humidity, temperature and wind speed), changes in their size due to evaporation or condensation and changes in their chemical concentration. Plume height is used as an input in the diffusion calculations and accounts for the moisture in the plume and possible condensation as described by Hanna, 1972.[6] For a steady state case, the differential equation describing the dispersion of drift droplets is:

$$-u_x \frac{\partial N}{\partial x} - v_t \frac{\partial N}{\partial z} + K_x \frac{\partial^2 N}{\partial x^2} + K_y \frac{\partial^2 N}{\partial y^2} + \frac{\partial}{\partial z}\left(K_z \frac{\partial N}{\partial z}\right) - \frac{\partial}{\partial R}\left(N \frac{\partial R}{\partial t}\right) = 0$$

where,

u_x = Wind velocity in x direction, m/sec

N = Number density of drift droplets, m^{-3}

v_t = Drift droplet terminal velocity, m/sec

K_x, K_y, K_z = The diffusion coefficients in x (downwind), y (crosswind) and z (vertical) directions respectively, m^2/sec

R = Droplet radius, m

t = Time, sec.

This equation is integrated numerically to yield the deposition rate of drift droplets. A detailed mathematical description is provided in a paper by Roffman and Grimble.[5]

TABLE 10.1A-1

COOLING TOWER CHARACTERISTICS

	Mechanical Draft Wet Tower, Linear Array	Mechanical Draft Wet Tower, Circular Array	Natural Draft Wet Tower	Mechanical Draft Wet/Dry Tower, 30% Plume Severity	Mechanical Draft Wet/Dry Tower, 0% Plume Severity
No. of Towers	1	1	1	1	1
No. of Cells	10	10	1	14	17
Tower Dimensions (m^2)	2,043.7	4,202.4	7,011.3	8,434.0	13,178.2
Tower Height (m)*	18.3	18.3	117.3	19.8	19.8
Tower Exit Diameter (m)*	7.3	8.5	45.7	8.5	8.5
Tower Exit Radius (m)*	3.7	4.3	22.9	4.3	4.3
Exit Velocity (m/sec)*	19.06	14.01	4.03	8.24	8.24
Total Circulating Water (m^3/sec)	13.37	13.37	16.72	16.72	13.37
Evaporative Losses (kg/sec)	267.50	267.50	267.50	246.05	246.05
Drift Losses (kg/sec)	6.94	6.94	8.20	7.57	6.31
TDS (ppm)	375	375	375	375	375
Blowdown (kg/sec)	170.34	170.34	170.34	157.72	157.72
Ambient Temp. (°F)					
Case 1	10	10	10	10	10
Case 2	20	20	20	20	20
Case 3	30	30	30	30	30
Case 4	40	40	40	40	40
Case 5	50	50	50	50	50
Case 6	60	60	60	60	60
Stack Temp. (°F)					
Case 1	86	86	84	86	86
Case 2	88	88	88	90	89
Case 3	89	89	89	93	93
Case 4	91	91	91	96	94
Case 5	93	93	93	98	98
Case 6	96	96	96	99	101
Evaporation Rate (gm/sec)*					
Case 1	24,146	24,146	187,704	14,196	14,196*
Case 2	25,566	25,566	210,624	15,950	15,645*
Case 3	27,073	27,073	223,042	17,795	17,694*
Case 4	28,619	28,619	235,768	19,848	18,246*
Case 5	30,278	30,278	249,440	21,010	20,622*
Case 6	33,759	33,759	278,118	21,346	21,573*

*Per cell

TABLE 10.1A-2

WIND SPEEDS FOR THE VARIOUS PASQUILL STABILITY CLASSES

	Wind Speed (m/sec)			
Stability	Station X-10* (31.6 m Level)	CRBRP (22.8 m Level)**	CRBRP (61 m Level)**	Mean
A	3.28	1.54	3.24	2.69
B	3.31	1.83	2.93	2.69
C	2.75	1.70	3.19	2.55
D	2.55	1.78	2.93	2.42
E	2.21	1.26	1.90	1.79
F	1.65	1.21	1.26	1.37

*Record: November 1971 to November 1972

**Record: April 1973 to October 1973

TABLE 10.1A-3

FREQUENCY DISTRIBUTION OF RELATIVE HUMIDITIES FOR BULL RUN STEAM PLANT

Temp., °F	5	15	25	35	45	55	65	75	85	93	97	100
-25	<0.01	<0.01	<0.01	<0.01	<0.01	<0.01	<0.01	<0.01	<0.01	<0.01	<0.01	<0.01
-15	<0.01	<0.01	<0.01	<0.01	<0.01	<0.01	<0.01	<0.01	<0.01	<0.01	<0.01	<0.01
-5	<0.01	<0.01	<0.01	<0.01	<0.01	<0.01	<0.01	<0.01	<0.01	<0.01	<0.01	<0.01
5	<0.01	<0.01	<0.01	<0.01	<0.01	<0.01	0.08	0.12	0.09	0.02	0.03	0.05
15	<0.01	<0.01	<0.01	<0.01	0.14	0.30	0.40	0.29	0.12	0.01	0.01	0.01
25	<0.01	<0.01	<0.01	0.15	0.57	0.96	1.08	1.00	0.72	0.16	0.05	0.04
32	<0.01	<0.01	0.01	0.20	0.43	0.76	0.98	1.42	1.19	0.22	0.10	0.07
37	<0.01	<0.01	0.05	0.32	0.51	0.78	1.20	1.46	1.48	0.31	0.09	0.06
45	<0.01	<0.01	0.20	0.78	1.40	2.01	2.44	2.81	3.91	1.38	0.81	0.29
55	<0.01	0.01	0.31	1.00	1.46	1.74	1.86	2.55	3.92	2.49	1.35	0.59
65	<0.01	0.01	0.38	1.00	1.27	1.64	2.25	3.58	7.14	3.26	2.13	0.84
75	0.01	0.02	0.23	0.69	0.97	2.07	3.23	4.00	4.67	1.54	0.45	0.21
85	0.02	<0.01	0.03	0.26	0.82	2.15	2.43	1.01	0.10	0.01	<0.01	<0.01
95	<0.01	<0.01	<0.01	0.02	0.05	0.11	0.02	<0.01	<0.01	<0.01	<0.01	<0.01
105	<0.01	<0.01	<0.01	<0.01	<0.01	<0.01	<0.01	<0.01	<0.01	<0.01	<0.01	<0.01
115	<0.01	<0.01	<0.01	<0.01	<0.01	<0.01	<0.01	<0.01	<0.01	<0.01	<0.01	<0.01

TABLE 10.1A-4

EFFECTIVE STACK HEIGHT FOR VARIOUS ATMOSPHERIC CONDITIONS
(in meters)

	Pasquill Stability Classes											
	A		B		C		D		E		F	
	10°F	60°F	10°F	60°F	10°F	60°F	10°F	60°F	10°F	60°F	10°F	60°F
Natural Draft Wet Cooling Tower	1,746	1,160	1,746	1,160	1,813	1,205	1,964	1,305	604	498	500	416
Mechanical Draft Wet Cooling Tower, Linear Array	435	258	435	258	452	268	489	290	480	333	366	274
Mechanical Draft Wet Cooling Tower, Circular Array	453	325	453	325	470	338	510	365	501	381	386	293
Mechanical Draft Wet/Dry Cooling Tower, Circular Array, 30% Plume Severity	371	234	371	234	385	243	417	263	461	359	354	274
Mechanical Draft Wet/Dry Cooling Tower, Circular Array, 0% Plume Severity	383	246	383	246	398	255	431	276	479	323	365	235

TABLE 10.1A-5

MEAN LENGTH OF VISIBLE PLUME FOR VARIOUS COOLING SYSTEMS AND STABILITY CLASSES

	Stability Class	No. of Ground Fog and Icing Hours		Mean Length of Visible Plume, (m) For Relative Humidities			
		100% Rel. Hum.	Severe Fog	100%	95%	85%	75%
Natural Draft Wet Cooling Tower	A	--	--	9,871	2,550	1,800	1,200
	B	--	--	11,228	2,775	2,475	1,830
	C	--	--	13,201	4,700	3,150	2,100
	D	--	--	19,220	10,500	4,600	3,150
	E	--	--	23,051	13,650	10,800	7,350
	F	--	--	27,617	18,018	15,660	11,172
Mechanical Draft Wet Cooling Tower, Linear Array	A	99.35	91.57	2,550	950	600	400
	B	8.80	--	5,500	1,783	1,250	1,100
	C	38.27	--	8,200	2,900	2,100	1,450
	D	--	--	9,600	6,000	4,600	3,600
	E	--	--	13,400	8,800	8,000	6,600
	F	--	--	16,500	12,800	11,100	10,233
Mechanical Draft Wet Cooling Tower, Circular Array	A	99.35	74.81	3,600	1,000	700	500
	B	8.80	--	7,000	1,850	1,450	1,200
	C	38.27	--	9,000	3,100	2,300	1,600
	D	--	--	10,400	7,000	5,000	3,800
	E	--	--	13,500	9,000	8,300	6,900
	F	--	--	16,600	13,000	11,300	10,467
Mechanical Draft Wet/Dry Cooling Tower, 30% Plume Severity	A	99.35	--	2,000	700	500	300
	B	8.54	--	5,000	1,650	1,050	700
	C	29.69	--	7,700	2,400	1,750	1,200
	D	--	--	8,400	5,100	3,100	2,775
	E	--	--	9,600	7,350	6,300	5,325
	F	--	--	10,400	9,275	8,700	8,075
Mechanical Draft Wet/Dry Cooling Tower, 0% Plume Severity	A	99.35	--	2,200	825	650	400
	B	8.54	--	5,150	1,700	1,225	850
	C	29.69	--	7,975	2,600	2,075	1,425
	D	--	--	8,750	5,275	3,500	2,950
	E	--	--	10,250	7,525	6,700	5,400
	F	--	--	11,300	10,300	9,350	8,400

TABLE 10.1A-6

FREQUENCY DISTRIBUTION OF VISIBLE PLUME AT CRBRP SITE FOR ALL STABILITY CLASSES

	Bearing (Compass Direction for Plant)															
	N	NNE	NE	ENE	E	ESE	SE	SSE	S	SSW	SW	WSW	W	WNW	NW	NNW
Visible Plume Formation*(hrs/yr)	336	634	303	333	96	86	61	187	220	649	340	554	258	252	81	87
Frequency of Wind** (hrs/yr)	578	1091	521	572	166	148	104	321	378	1115	585	953	444	434	139	149

*For plumes attaining lengths of $\geq$ 300 feet

**From Table 2.6-18. Note that calm hours are not included in tabulations

TABLE 10.1A-7

POTENTIAL GROUND FOGGING FOR MECHANICAL DRAFT WET COOLING TOWER, LINEAR ARRAY

		Ground Interception		Max. Intensity		Minimum Horiz. Visibility		Hours of Temp. at 100% R.H.	Hours of Ground Fog or Icing		
		Begin (m)	End (m)	Distance (m)	Density (g/m^3)	Feet	Miles		Horiz. Visibility 1/2 Mile or Less	Horiz. Visibility 1/4 Mile or Less	Horiz. Visibility 1/10 Mile or Less
10°F	A	700	2,000	800	0.14	718	0.14	8.77	1.53	1.53	--
	B	2,200	4,200	3,200	0.08	1,017	0.19	8.77	0.14	0.14	--
	C	--	--	--	--	--	--	--	--	--	--
	D	--	--	--	--	--	--	--	--	--	--
	E	--	--	--	--	--	--	--	--	--	--
	F	--	--	--	--	--	--	--	--	--	--
20°F	A	700	1,900	800	0.15	685	0.13	7.88	1.37	1.37	--
	B	2,100	4,000	2,400	0.09	933	0.18	7.88	0.12	0.12	--
	C	--	--	--	--	--	--	--	--	--	--
	D	--	--	--	--	--	--	--	--	--	--
	E	--	--	--	--	--	--	--	--	--	--
	F	--	--	--	--	--	--	--	--	--	--
30°F	A	700	1,800	800	0.20	520	0.10	28.03	4.88	4.88	4.88
	B	1,800	4,900	2,400	0.12	784	0.15	28.03	0.43	0.43	--
	C	4,800	7,200	5,000	0.08	1,017	0.19	28.03	1.93	1.93	--
	D	--	--	--	--	--	--	--	--	--	--
	E	--	--	--	--	--	--	--	--	--	--
	F	--	--	--	--	--	--	--	--	--	--
40°F	A	500	1,800	800	0.25	460	0.09	96.36	16.76	16.76	16.76
	B	1,400	4,800	2,400	0.15	685	0.13	96.36	1.48	1.48	--
	C	3,400	7,200	4,800	0.09	933	0.18	96.36	6.65	6.65	--
	D	--	--	--	--	--	--	--	--	--	--
	E	--	--	--	--	--	--	--	--	--	--
	F	--	--	--	--	--	--	--	--	--	--
50°F	A	500	1,800	800	0.31	398	0.08	169.94	29.56	29.56	29.56
	B	1,400	4,800	2,400	0.19	553	0.10	169.94	2.62	2.62	--
	C	2,900	7,200	4,000	0.11	817	0.15	169.94	11.73	11.73	--
	D	--	--	--	--	--	--	--	--	--	--
	E	--	--	--	--	--	--	--	--	--	--
	F	--	--	--	--	--	--	--	--	--	--
60°F	A	500	1,800	800	0.35	391	0.07	260.17	45.25	45.25	45.25
	B	1,100	5,800	2,400	0.20	520	0.10	260.17	4.01	4.01	4.01
	C	2,000	7,200	4,000	0.16	652	0.12	260.17	17.96	17.96	--
	D	--	--	--	--	--	--	--	--	--	--
	E	--	--	--	--	--	--	--	--	--	--
	F	--	--	--	--	--	--	--	--	--	--
								TOTAL HOURS	146.30	146.30	100.46

TABLE 10.1A-8

POTENTIAL GROUND FOGGING FOR MECHANICAL DRAFT WET COOLING TOWER, CIRCULAR ARRAY

		Ground Interception		Max. Intensity		Minimum Horiz. Visibility		Hours of Temp. at 100% R.H.	Hours of Ground Fog or Icing		
		Begin (m)	End (m)	Distance (m)	Density (g/m^3)	Feet	Miles		Horiz. Visibility 1/2 Mile or Less	Horiz. Visibility 1/4 Mile or Less	Horiz. Visibility 1/10 Mile or Less
10°F	A	700	2,000	800	0.11	817	0.15	8.77	1.53	1.53	--
	B	2,400	4,000	3,200	0.05	1,300	0.25	8.77	0.14	0.14	--
	C	--	--	--	--	--	--	--	--	--	--
	D	--	--	--	--	--	--	--	--	--	--
	E	--	--	--	--	--	--	--	--	--	--
	F	--	--	---	--	--	--	--	--	--	--
20°F	A	900	1,900	1,000	0.11	817	0.15	7.88	1.37	1.37	--
	B	2,200	4,000	2,400	0.06	1,200	0.23	7.88	0.12	0.12	--
	C	--	--	--	--	--	--	--	--	--	--
	D	--	--	--	--	--	--	--	--	--	--
	E	--	--	--	--	--	--	--	--	--	--
	F	--	--	--	--	--	--	--	--	--	--
30°F	A	700	1,800	800	0.15	685	0.13	28.03	4.88	4.88	--
	B	1,800	4,800	2,400	0.08	1,017	0.19	28.03	0.43	0.43	--
	C	4,800	7,200	5,200	0.05	1,300	0.25	28.03	1.93	1.93	--
	D	--	--	--	--	--	--	--	--	--	--
	E	--	--	--	--	--	--	--	--	--	--
	F	--	--	--	--	--	--	--	--	--	--
40°F	A	600	1,800	800	0.19	553	0.10	96.36	16.76	16.76	16.76
	B	1,500	4,600	2,400	0.10	850	0.16	96.36	1.48	1.48	--
	C	3,800	7,200	4,800	0.07	1,100	0.21	96.36	6.65	6.65	--
	D	--	--	--	--	--	--	--	--	--	--
	E	--	--	--	--	--	--	--	--	--	--
	F	--	--	--	--	--	--	--	--	--	--
50°F	A	500	1,800	800	0.24	472	0.09	169.94	29.56	29.56	29.56
	B	1,400	4,800	2,400	0.12	784	0.14	169.94	2.62	2.62	--
	C	3,000	7,200	4,800	0.09	767	0.15	169.94	11.73	11.73	--
	D	--	--	--	--	--	--	--	--	--	--
	E	--	--	--	--	--	--	--	--	--	--
	F	--	--	--	--	--	--	--	--	--	--
60°F	A	500	1,800	800	0.30	400	0.08	260.17	45.25	45.25	45.25
	B	1,200	5,600	2,400	0.16	652	0.12	260.17	4.01	4.01	--
	C	2,200	7,200	4,000	0.12	784	0.14	260.17	17.96	17.96	--
	D	--	--	--	--	--	--	--	--	--	--
	E	--	--	--	--	--	--	--	--	--	--
	F	--	--	--	--	--	--	--	--	--	--
								TOTAL HOURS	146.42	146.42	91.57

TABLE 10.1A-9

POTENTIAL GROUND FOGGING FOR MECHANICAL DRAFT WET/DRY COOLING TOWER, 30 PERCENT PLUME SEVERITY

		Ground Interception		Max. Intensity		Minimum Horiz. Visibility		Hours of Temp. at 100% R.H.	Hours of Ground Fog or Icing		
		Begin (m)	End (m)	Distance (m)	Density (g/m^3)	Feet	Miles		Horiz. Visibility 1/2 Mile or Less	Horiz. Visibility 1/4 Mile or Less	Horiz. Visibility 1/10 Mile or Less
10°F	A	700	1,400	800	0.06	1,200	0.23	8.77	1.53	1.53	--
	B	--	--	--	--	--	--	--	--	--	--
	C	--	--	--	--	--	--	--	--	--	--
	D	--	--	--	--	--	--	--	--	--	--
	E	--	--	--	--	--	--	--	--	--	--
	F	--	--	--	--	--	--	--	--	--	--
20°F	A	700	1,400	800	0.09	933	0.18	7.88	1.37	1.37	--
	B	--	--	--	--	--	--	--	--	--	--
	C	--	--	--	--	--	--	--	--	--	--
	D	--	--	--	--	--	--	--	--	--	--
	E	--	--	--	--	--	--	--	--	--	--
	F	--	--	--	--	--	--	--	--	--	--
30°F	A	500	1,600	800	0.10	850	0.16	28.03	4.88	4.88	--
	B	2,400	4,800	2,400	0.08	1,017	0.19	28.03	0.43	0.43	--
	C	--	--	--	--	--	--	--	--	--	--
	D	--	--	--	--	--	--	--	--	--	--
	E	--	--	--	--	--	--	--	--	--	--
	F	--	--	--	--	--	--	--	--	--	--
40°F	A	500	1,600	800	0.13	751	0.14	96.36	16.76	16.76	--
	B	1,400	4,000	2,400	0.06	1,200	0.23	96.36	1.48	1.48	--
	C	--	--	--	--	--	--	--	--	--	--
	D	--	--	--	--	--	--	--	--	--	--
	E	--	--	--	--	--	--	--	--	--	--
	F	--	--	--	--	--	--	--	--	--	--
50°F	A	500	1,600	800	0.20	580	0.11	169.94	29.56	29.56	--
	B	1,400	3,800	2,400	0.09	933	0.18	169.94	2.62	2.62	--
	C	2,600	5,600	4,000	0.06	1,200	0.23	169.94	11.73	11.73	--
	D	--	--	--	--	--	--	--	--	--	--
	E	--	--	--	--	--	--	--	--	--	--
	F	--	--	--	--	--	--	--	--	--	--
60°F	A	500	1,600	800	0.18	586	0.11	260.17	45.25	45.25	--
	B	1,200	4,800	1,600	0.09	933	0.18	260.17	4.01	4.01	--
	C	2,000	5,200	3,200	0.07	1,100	0.21	260.17	17.96	17.96	--
	D	--	--	--	--	--	--	--	--	--	--
	E	--	--	--	--	--	--	--	--	--	--
	F	--	--	--	--	--	--	--	--	--	--
								TOTAL HOURS	137.58	137.58	0

TABLE 10.1A-10

POTENTIAL GROUND FOGGING FOR MECHANICAL DRAFT WET/DRY COOLING TOWER, ZERO PERCENT PLUME SEVERITY

		Ground Interception		Max. Intensity		Minimum Horiz. Visibility		Hours of Temp. at 100% R.H.	Hours of Fogging or Icing		
		Begin (m)	End (m)	Distance (m)	Density (g/m^3)	Feet	Miles		Horiz. Visibility 1/2 Mile or Less	Horiz. Visibility 1/4 Mile or Less	Horiz. Visibility 1/10 Mile or Less
10°F	A	700	900	800	0.06	1,200	0.23	8.77	1.53	1.53	--
	B	--	--	--	--	--	--	--	--	--	--
	C	--	--	--	--	--	--	--	--	--	--
	D	--	--	--	--	--	--	--	--	--	--
	E	--	--	--	--	--	--	--	--	--	--
	F	--	--	--	--	--	--	--	--	--	--
20°F	A	900	1,100	800	0.07	1,100	0.21	7.88	1.37	1.37	--
	B	--	--	--	--	--	--	--	--	--	--
	C	--	--	--	--	--	--	--	--	--	--
	D	--	--	--	--	--	--	--	--	--	--
	E	--	--	--	--	--	--	--	--	--	--
	F	--	--	--	--	--	--	--	--	--	--
30°F	A	900	1,400	800	0.08	1,017	0.19	28.03	4.88	4.88	--
	B	3,800	4,400	4,000	0.06	1,200	0.23	28.03	0.43	0.43	--
	C	--	--	--	--	--	--	--	--	--	--
	D	--	--	--	--	--	--	--	--	--	--
	E	--	--	--	--	--	--	--	--	--	--
	F	--	--	--	--	--	--	--	--	--	--
40°F	A	1,000	1,300	1,100	0.08	1,017	0.19	96.36	16.76	16.76	--
	B	2,500	3,800	2,900	0.06	1,200	0.23	96.36	1.48	1.48	--
	C	--	--	--	--	--	--	--	--	--	--
	D	--	--	--	--	--	--	--	--	--	--
	E	--	--	--	--	--	--	--	--	--	--
	F	--	--	--	--	--	--	--	--	--	--
50°F	A	1,000	1,200	1,100	0.14	718	0.14	169.94	29.56	29.56	--
	B	2,000	3,200	2,400	0.08	1,017	0.19	169.94	2.62	2.62	--
	C	3,000	4,800	4,000	0.06	1,200	0.23	169.94	11.73	11.73	--
	D	--	--	--	--	--	--	--	--	--	--
	E	--	--	--	--	--	--	--	--	--	--
	F	--	--	--	--	--	--	--	--	--	--
60°F	A	800	1,200	800	0.12	784	0.14	260.17	45.25	45.25	--
	B	1,400	2,800	1,600	0.09	933	0.18	260.17	4.01	4.01	--
	C	2,800	3,800	3,000	0.07	1,100	0.21	260.17	17.96	17.96	--
	D	--	--	--	--	--	--	--	--	--	--
	E	--	--	--	--	--	--	--	--	--	--
	F	--	--	--	--	--	--	--	--	--	--
								TOTAL HOURS	137.58	137.58	0

TABLE 10.1A-11

INTERCEPTION OF PLUME WITH ELEVATED TERRAIN

Cooling System	Pasquill Stability Class.	Ambient Temperature, (°F)	Relative Humidity, (%)	Hours of Fog	Elevation of Ground Interception: 125 m Above Plant Grade		100 m Above Plant Grade		75 m Above Plant Grade	
					Begin	End	Begin	End	Begin	End
Mechanical Draft Wet Linear Array	A	10°	100%	1.53	800	1,200	825	1,175	900	1,125
	A	20°	100%	1.37	800	1,175	825	1,150	900	1,100
	A	30°	100%	4.88	700	1,150	800	1,125	875	1,100
	A	40°	100%	16.76	700	1,125	750	1,100	800	1,050
	A	50°	100%	29.56	600	1,100	650	1,075	700	1,025
	A	60°	100%	45.25	500	1,025	525	1,000	600	975
	B	60°	100%	4.01	1,250	2,300	1,400	2,100	1,500	1,900
Mechanical Draft Wet Circular Array	A	20°	100%	1.37	800	1,175	825	1,100	--	--
	A	30°	100%	4.88	750	1,100	800	1,050	--	--
	A	40°	100%	16.76	625	1,125	675	1,100	750	1,050
	A	50°	100%	29.56	600	1,100	625	1,075	675	1,025
	A	60°	100%	45.25	500	1,025	525	1,000	575	975
	B	60°	100%	4.01	1,000	2,300	1,150	2,200	1,500	2,000
Mechanical Draft Wet/Dry 30% Plume Severity	A	20°	100%	1.37	700	1,175	750	1,125	800	1,100
	A	30°	100%	4.88	675	1,125	700	1,100	750	1,075
	A	40°	100%	16.76	550	1,100	600	1,075	600	1,050
	A	50°	100%	29.56	500	1,100	525	1,075	575	1,050
	A	60°	100%	45.25	400	1,075	525	1,050	575	1,025
	B	60°	100%	4.01	1,400	2,000	1,450	1,975	1,500	1,800
Mechanical Draft Wet/Dry 0% Plume Severity	A	20°	100%	1.37	600	1,100	625	1,075	700	1,000
	A	30°	100%	4.88	575	1,050	600	1,025	675	975
	A	40°	100%	16.76	550	1,025	575	1,000	625	950
	A	50°	100%	29.56	500	975	525	950	600	925
	A	60°	100%	45.25	475	950	500	925	525	900

TABLE 10.1A-12

ANTICIPATED AREAS OF FOG IMPACT FROM THE COOLING TOWERS

Sensitive Area	Distance Downwind, m	Direction From The Plant	Altitude Above Plant Grade, m	Horizontal Visibility Miles	Horizontal Visibility Feet	Number of Fog Hours Per Year* Mechanical Draft Wet Cooling Tower Linear Array	Mechanical Draft Wet Cooling Tower Circular Array	Mechanical Draft Wet/Dry Tower 30% Plume Severity	Mechanical Draft Wet/Dry Tower 0% Plume Severity
ORNL	7,240	NE	0	1/2	2,640	0.13	0.13	0.00	0.00
				1/4	1,320	0.12	0.00	0.00	0.00
				1/10	528	0.00	0.00	0.00	0.00
Interstate 40	1,770	SSE	0	1/2	2,640	0.81	0.79	0.06	0.04
				1/4	1,320	0.79	0.76	0.04	0.01
				1/10	528	0.66	0.54	0.00	0.00
Gallaher Bridge	2,575	NW	0	1/2	2,640	0.08	0.04	0.03	0.01
				1/4	1,320	0.07	0.03	0.00	0.00
				1/10	528	0.01	0.00	0.00	0.00

*The values presented reflect the current state-of-the-art in plume modeling and are limited in accuracy to ± x 10

TABLE 10.1A-13

ANTICIPATED SEVERE FOGGING* FROM THE COOLING TOWERS

Sensitive Area	Distance Downwind, m	Direction From The Plant	Altitude Above Plant Grade, m	Ground Fog, Hours Per Year: Mechanical Draft Wet Cooling Tower Linear Array	Mechanical Draft Wet Cooling Tower Circular Array	Mechanical Draft Wet/Dry Tower 30% Plume Severity	Mechanical Draft Wet/Dry Tower 0% Plume Severity
Hood Ridge	1,420	NE-ENE	100	0.50	0.50	0.50	--
Dug Ridge	1,210	SW	102	0.27	0.27	0.27	--
Chestnut Ridge	2,410	N	93	--	--	--	--
Chestnut Ridge	1,930	W	68	0.20	0.20	--	--
Chestnut Ridge	3,380	NNE	75	--	--	--	--
Chestnut Ridge	5,630	NNE-NE	75	--	--	--	--
Chestnut Ridge	7,720	NNE-NE	93	--	--	--	--
Chestnut Ridge	8,200	NE-ENE	68	--	--	--	--
Moore Ridge	2,010	ESE-SE	117	0.12	0.12	0.12	--
Moore Ridge	2,570	SE-SSE	126	0.19	0.19	--	--

*Horizontal visibility 1/10 mile or less

TABLE 10.1A-14

EFFECTIVE PLUME RISE OF DRIFT DROPLETS

(in meters)

Stability Class	Mechanical Draft Wet Tower, Linear Array	Mechanical Draft Wet Tower, Circular Array	Natural Draft Wet Tower	Mechanical Draft Wet/Dry Tower, 30% Plume Severity	Mechanical Draft Wet/Dry Tower, 0% Plume Severity
C	156	208	1,301	208	208
D	170	226	1,415	226	226

TABLE 10.1A-15

DRIFT DEPOSITION FROM A NATURAL DRAFT WET TOWER

Stability Class	Drift Deposition Rate for Various Directions From the Site (lb/acre-month)*															
	N	NNE	NE	ENE	E	ESE	SE	SSE	S	SSW	SW	WSW	W	WNW	NW	NNW
C	0.85	2.07	1.07	1.41	0.72	0.72	0.31	0.16	0.42	2.19	1.03	0.97	0.22	0.25	0.13	0.56

*C Stability: 0.162×10^{-1} kg/m^2 - yr = (1.204×10^{1} lb/acre-month) $\left(\frac{8.20}{7.38}\right)$ = 1.338×10^{1} lb/acre-month at 2518.0 m

TABLE 10.1A-16

DRIFT DEPOSITION FROM A MECHANICAL DRAFT WET TOWER, LINEAR ARRAY

Stability Class	Drift Deposition Rate for Various Directions From the Site (lb/acre-month)*															
	N	NNE	NE	ENE	E	ESE	SE	SSE	S	SSW	SW	WSW	W	WNW	NW	NNW
C	34.22	83.71	43.10	57.07	29.19	29.19	12.67	6.34	17.11	88.75	41.86	39.31	8.88	10.13	5.09	22.85
D	23.49	75.31	36.25	58.94	23.07	20.71	7.96	5.18	26.27	49.38	24.59	29.89	9.56	12.76	6.78	11.53

*C Stability 0.710 kg/m^2-yr = (527.89 lb/acre-month) $\left(\frac{7.57}{7.38}\right)$ = 541.48 lb/acre-month at 326.5 m

D Stability 0.552 kg/m^2-yr = (410.41 lb/acre-month) $\left(\frac{7.57}{7.38}\right)$ = 420.98 lb/acre-month at 360.7 m

TABLE 10.1A-17

DRIFT DEPOSITION FROM A MECHANICAL DRAFT WET TOWER, CIRCULAR ARRAY

Stability Class	Drift Deposition Rate for Various Directions From the Site (lb/acre-month)*															
	N	NNE	NE	ENE	E	ESE	SE	SSE	S	SSW	SW	WSW	W	WNW	NW	NNW
C	28.53	69.78	35.93	47.57	24.33	24.33	10.56	5.28	14.26	73.98	34.89	32.77	7.40	8.44	4.24	19.05
D	19.58	62.78	30.21	49.13	19.23	17.26	6.63	4.32	21.90	41.16	20.60	24.91	7.97	10.63	5.65	9.61

*C Stability 0.710 kg/m^2-yr = (527.89 lb/acre-month) $\left(\frac{6.31}{7.38}\right)$ = 451.35 lb/acre-month at 326.5 m

D Stability 0.552 kg/m^2-yr = (410.41 lb/acre-month) $\left(\frac{6.31}{7.38}\right)$ = 350.91 lb/acre-month at 360.7 m

TABLE 10.1A-18

DRIFT DEPOSITION FROM A MECHANICAL DRAFT WET/DRY TOWER, 30 PERCENT PLUME SEVERITY

Stability Class	Drift Deposition Rate for Various Directions From the Site (lb/acre-month)*															
	N	NNE	NE	ENE	E	ESE	SE	SSE	S	SSW	SW	WSW	W	WNW	NW	NNW
C	17.11	41.86	21.55	28.54	14.59	14.59	6.34	3.17	8.56	44.37	20.93	19.66	4.44	5.06	2.54	11.43
D	11.75	37.66	18.12	29.47	11.53	10.36	3.98	2.59	13.13	24.69	12.36	14.94	4.78	6.38	3.39	5.77

*C Stability 0.355 kg/m^2-yr = (263.94 lb/acre-month) $\left(\frac{7.57}{7.38}\right)$ = 270.74 lb/acre-month at 326.5 m

D Stability 0.276 kg/m^2-yr = (205.21 lb/acre-month) $\left(\frac{7.57}{7.38}\right)$ = 210.49 lb/acre-month at 360.7 m

TABLE 10.1A-19

DRIFT DEPOSITION FROM A MECHANICAL DRAFT WET/DRY TOWER, ZERO PERCENT PLUME SEVERITY

Stability Class	Drift Deposition Rate for Various Directions From the Site (lb/acre-month)*															
	N	NNE	NE	ENE	E	ESE	SE	SSE	S	SSW	SW	WSW	W	WNW	NW	NNW
C	14.26	34.89	17.96	23.79	12.16	12.16	5.28	2.64	7.13	36.99	17.44	16.38	3.70	4.22	2.12	9.52
D	9.79	31.39	15.11	24.56	9.61	8.63	3.32	2.16	10.95	20.58	10.30	12.46	3.98	5.32	2.82	4.81

*C Stability 0.355 kg/m^2-yr = (263.94 lb/acre-month) $\left(\frac{6.31}{7.38}\right)$ = 225.67 lb/acre-month at 326.5 m

D Stability 0.276 kg/m^2-yr = (205.21 lb/acre-month) $\left(\frac{6.31}{7.38}\right)$ = 175.45 lb/acre-month at 360.7 m

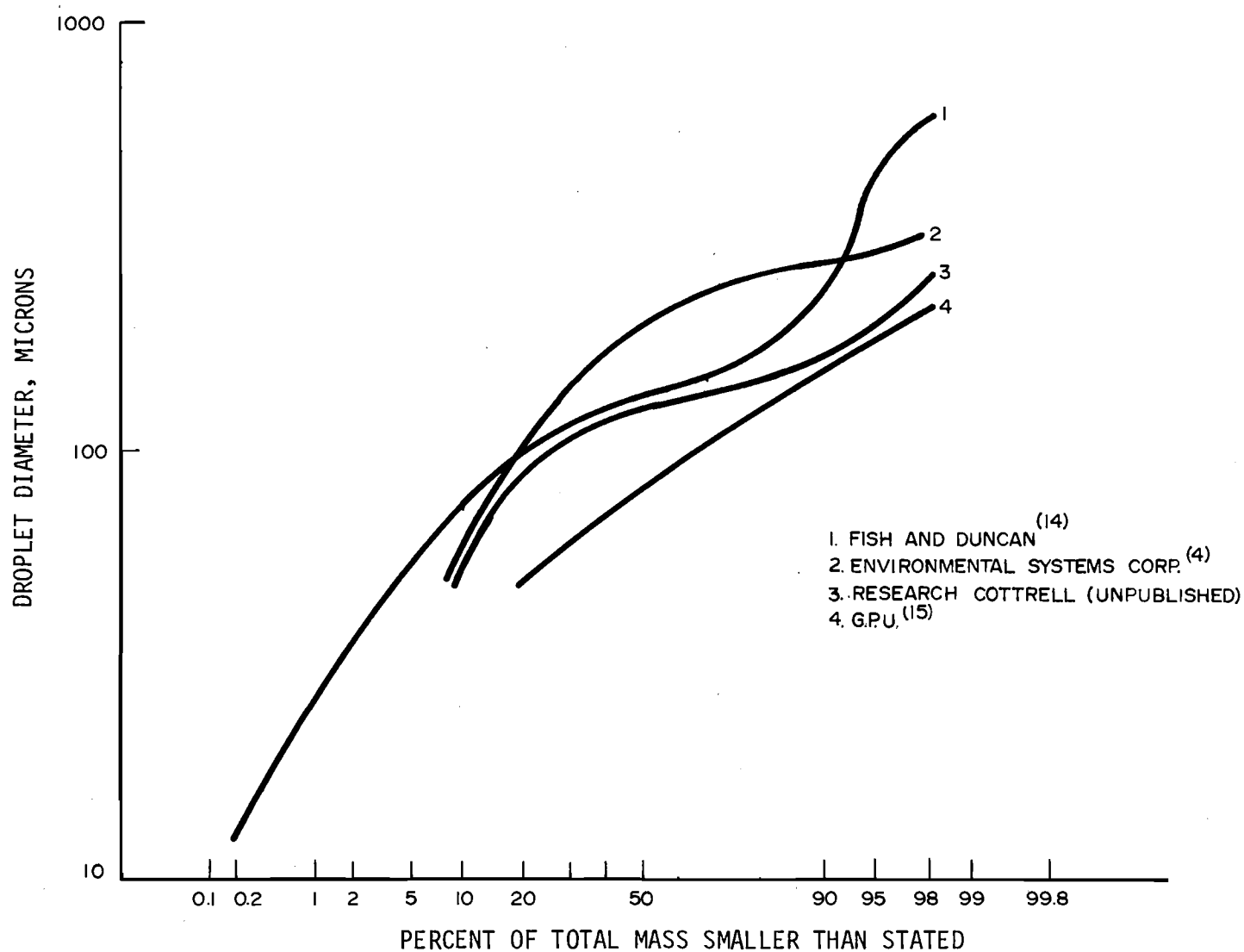

Figure 10.1A-1 CUMULATIVE MASS DISTRIBUTION OF DRIFT DROPLETS FOR VARIOUS DIAMETERS AS OBSERVED ABOVE THE DRIFT ELIMINATORS(7)

14.6 APPENDIX TO SECTION 10.3

APPENDIX TO SECTION 10.3

CRBRP DISCHARGE PLUME STUDY

INTRODUCTION

During operation, the CRBRP cooling system will evaporate small quantities of water. Chemical constituents within the cooling water will increase and must be discharged to maintain the water chemistry within acceptable limits. This aqueous discharge at elevated temperature and chemical constituents is known as blowdown and will be released to the Clinch River. Several alternative means of discharging the blowdown to the Clinch River are discussed in this section; they may be classified as (1) surface discharge; (2) submerged single port discharge and (3) submerged multiport discharge.

The Clinch River exhibits characteristics of both a flowing stream and an impoundment depending on the magnitude of controlled releases from various upstream and downstream TVA dams, see Section 2.5. Therefore, a discharge plume analysis must consider cases representative of both typical (flowing) and extreme (extended no-flow) conditions. Table 10.3A-1 identifies the four flow regime cases examined in this study. Cases analyzed for each alternative are indicated in Table 10.3A-2.

ALTERNATIVE DISCHARGE DESIGNS

Three discharge designs are considered in this study. All are subject to the blowdown characteristics presented in Table 10.3A-3. As blowdown flow varies seasonally, discharge exit velocity varies accordingly as well as among the alternative designs, as can be seen in Table 10.3A-4.

The surface discharge is shown in Figure 10.3A-1 and is basically a pipe terminating with a flared end at the minimum water level (735 feet MSL).

Exit velocities depend on the water surface elevations; at the minimum water level a supercritical open-channel velocity is produced while the maximum water level of 741 feet MSL produces a submerged nozzle.

Figure 10.3A-2 illustrates the submerged single port discharge design. A covered pipe is laid to the shoreline and is extended to a desired elevation and offshore distance. The pipe is fitted with an 8-inch diameter converging nozzle and is located at an elevation four feet below the minimum water level or at approximately 731 feet MSL. The submerged single port discharge is an attractive design because of its ability to rapidly reduce the "excess temperature" (degrees F above river ambient) of the effluent. This is accomplished through rapid mixing induced by the high momentum discharge and the existence of ambient water on all sides of the entraining jet.

If the number of nozzles are increased, there tends to be a more rapid mixing of the effluent with ambient waters. A case in point is the multiport discharge shown in Figure 10.3A-3. Mixing occurs more rapidly with the multiport than the single port because of the increase in entrainment area. The multiport discharge examined in this study is so designed that the exit velocity through each of the four nozzles is equal to that of the single port nozzle.

ASSUMPTIONS

Although it utilizes state-of-the-art mathematical models, the discharge study is, at best, a theoretical estimate of the anticipated plumes. Results presented are subject to a degree of uncertainity as is inherent in any attempt to apply mathematical quantification to environmental events.

To compensate for gaps in the state of the art and to render the mathematics more tractable, several assumptions have been made in the course of this study. These are generally conservative in nature and, there-

fore, tend to increase rather than reduce the extent of the predicted plume formations.

Heat transport to the atmosphere is neglected in the thermal plume analysis. Although it is an important heat dissipation mechanism in far field mixing, the CRBRP thermal plumes are not extensive and ambient temperatures are achieved before significant transport would occur.

The depth of the mixed layer for both thermal and chemical plumes is taken as one-eighth of the trajectory length.[1] A possible consequence of this assumption is to disfavor slightly the multiport discharge by assigning to it high values for mixed layer depth in comparison to the single port. In actuality, the multiport mixed layer depth may be closer to one-twelfth than one-eighth the trajectory and the single port one-sixth rather than one-eighth the trajectory.

Downstream profiles of thermal plume development for the flowing water cases are estimated by assuming a constant value of lateral eddy diffusivity for open channel dispersion. Determination of actual diffusivities would require an extensive field program of dye studies. This was not considered essential as the CRBRP discharge is small compared to the size of the Clinch River and, as this study demonstrates, does not hold the potential for significant adverse environmental impact. Eddy diffusivity values chosen are based on experimentally determined values obtained for the Missouri River,[2] a waterbody similar in channel size to the Clinch River. Although the constant values chosen are not necessarily conservative, their use does not substantially alter the results of this study.

Plume development for the extreme cases is controlled by the discharge jet. At the point of plume impingement with the surface, a two-dimensional model for near field is utilized with a factor of 0.154 x (where x is the distance along the plume trajectory measured from plume leading edge to discharge point) governing plume horizontal spreading.[3]

Wind and wave action is ignored throughout the analysis as the mathematics involved in predicting their effect is extremely complex. This introduces conservatism into the study by not taking credit for a potentially large external inducement to mixing. Results obtained for the extreme cases are particularly affected by this assumption as significant wind and wave-stimulated mixing of the plumes may be reasonably anticipated during a 29 day period. The full values of the predicted plume extents for these cases will, therefore, rarely materialize.

Chemical isopleths are determined by correlation with the isotherms from the waste heat (thermal discharge) analysis. Dilution of waste heat and chemicals is assumed to occur simultaneously; thus, a dilution of two of the waste heat is equivalent to a dilution of two of the blowdown chemical concentrations above ambient.

SURFACE DISCHARGE

The environmental performance of the surface discharge was predetermined to be potentially inferior to the submerged designs for all conditions. Therefore, it was not considered essential to evaluate all four flow cases for the surface discharge alternative.

Extreme Case -- February

For the February extended no-flow case, the CRBRP effluent exits the discharge nozzle at the water surface in a supercritical state (Fronde number >1). Velocity and depth are assumed to be critical and the energy loss due to turbulence from the hydraulic pump at the mixing point is neglected. A surface discharge model developed for three-dimensional buoyant jets is utilized for the analysis.[4]

Surface and cross-sectional isotherms for this case are shown in Figure 10.3A-4. The thermal plume extends nearly to the river

bottom and, as such, water at ambient temperature available for mixing may be restricted causing increases in plume temperatures (particularly the <2.5°F isotherms). In the immediate vicinity of the discharge, temperature differentials as high as 20 degrees F are produced at the surface. These, however, do not occupy significant surface acreage. Isotherms representing 5, 2.5 and 1.25 degrees F are produced as the plume extends outward and these encompass 0.02, 0.12 and 0.61 surface acres, respectively.

As noted under ASSUMPTIONS, chemical isopleths are determined based on a postulated equivalency between the dilution of waste heat and chemicals. Values for chemical isopleths are given as percentages according to the following formula:

$$\% = \frac{C_M - C_A}{C_I - C_A} \times 100$$

where,

C_M = Chemical concentration of the mixed effluent after jet momentum is dissipated

C_A = Ambient Clinch River chemical concentration

C_I = Initial blowdown concentration.

The value assigned to a chemical isopleth thus represents a percentage of the difference between initial blowdown and river ambient chemical concentrations. Determination of C_M is made by estimating the minimum isothermal region that is affected by the discharge jet and converting to a chemical dilution.

For the February 29 day no-flow case, the chemical plume for the surface discharge occupies 2,032 acres at the surface and extends approximately 9.7 miles on either side of the discharge point. Mixed depth of the plume is taken as one-eighth of the trajectory

(see ASSUMPTIONS) or 2.7 feet. As the CRBRP intake structure is located 1.8 miles upstream of the discharge, recirculation of water containing higher than river ambient chemical concentrations will occur. The factors controlling the magnitude of recirculation are the concentration factor for the cooling system (2.5) and the horizontal rate of travel for the plume (0.04 fps for this case of the surface discharge). Thus, after 2.7 days, the boundary of the initial isopleth (5.9%) reaches the intake. Blowdown concentration is increased by 5.9 percent and a second isopleth (6.2%) begins to move outward from the discharge point. After another 2.7 days, the boundaries of this isopleth reach the intake and a further incremental rise in blowdown concentration is realized. This process continues, as seen in Table 10.3A-5, so that, at the conclusion of the 29-day no-flow period, the chemical plume may be represented by 11 isopleths 1.8 miles apart moving outward concentrically from the discharge point. Chemical concentration increases within the plume range from a 10.4 percent isopleth in the intake-discharge vicinity to the initial 5.9 percent isopleth which now forms the outer plume boundaries. Cooling system blowdown concentration after 29 days is increased by 76 percent.

Extreme Case -- July

During the summer months, the normal pool elevation of the Clinch River is such that the surface discharge point is submerged under six feet of water. For the 29-day no-flow case in July, the centerline of the discharge plume would surface approximately 34 feet directly off the nozzle.[5] Its "excess temperature" would be 2.9 degrees F and the plume would be approximately 14 feet wide. As previously noted, the depth of the plume's mixed layer is assumed to be one-eighth of the trajectory or 4.5 feet. At the point of impingement with the water surface the plume will tend to take on the characteristics of a two-dimensional jet with vertical

entrainment inhibited. From the point of impingement, outward spreading of the plume is estimated to be 0.154 x (see ASSUMPTIONS).

Results of the analysis are shown in Figure 10.3A-5 for surface and cross-sectional isotherms of this "near-surface" discharge. Residual momentum enables a further dilution after impingement from a factor of 9 to approximately 17 where ambient turbulence dominates the mixing. The 1.5 and 1.0 degree F isotherms encompass approximately 0.054 and 0.116 surface acres, respectively.

The 29 day no-flow condition would create a large area where chemical constituents of the blowdown will be detectable. At a mixed depth of 4.5 feet, this would be equivalent to 1,212 acres or approximately 7.8 miles of the Clinch River on either side of the discharge point. Recirculation will occur in a manner similar to that described for the February extreme case; however, the horizontal rate of plume travel is 0.05 fps for this case. Chemical isopleths formed after 29 days range from 11.3 percent in the intake-discharge vicinity to 5.9 percent at the outer plume boundaries. Blowdown chemical concentration is increased by 91 percent.

SUBMERGED SINGLE PORT DISCHARGE

Typical Case -- Winter

Under the winter conditions, listed in Table 10.3A-1, the Clinch River has a cross-sectional area of 3,830 square feet and a mean velocity of 1.32 fps. Plant discharge is at 5.39 cfs and 74 degrees F, as shown in Table 10.3A-3. Exit velocity for the submerged single discharge is 15.4 fps as shown in Table 10.3A-4. At this velocity, the jet will initially undergo only minimal downriver deflection in the river crossflow. However, by the time the plume has reached the surface, it will be dominated by the ambient

velocity. After impingement the mixed plume will be advected and diffused in the downstream direction.

The preceding conditions will produce a plume that, at the point of impingement, will have an "excess temperature" of approximately 1.7 degrees F, a plume width of 20 feet and a mixed depth of 6.0 feet. Ambient turbulence will control the plume after impingement. Downstream profiles of the waste heat are estimated by assuming a constant value of lateral eddy diffusivity for open-channel dispersion (see ASSUMPTIONS). Surface and cross-sectional isotherms for the plume are presented in Figure 10.3A-6. Surface acreage encompassed is 0.043 and 0.273 for the 1.0 and 0.5 degree F isotherms, respectively.

Chemical concentrations within the discharge plume are represented by 5.5 and 1.6 percent isopleths which conform to the point of impingement and the 0.5 degree F isotherm, respectively.

Typical Case -- Summer

Under summer conditions listed in Table 10.3A-1, the Clinch River has a width of 657 feet, depth of 11.6 feet and mean velocity of 0.63 fps. The submerged single port discharge has an exit velocity of 20.6 fps, a flow rate of 7.20 cfs and a temperature of 90.1 degrees F.

The plume is estimated to have an "excess temperature" of approximately 0.84 degrees F at the point of surface impingement, width of 30 feet and a mixed depth of approximately 8.8 feet. Clinch River currents will convey the mixed effluent downstream and reduce the "excess temperature" through diffusion. Downstream profiles of the waste heat are estimated as shown in Figure 10.3A-7.

Chemical constituents of the blowdown will be detectable within the thermal effluent. At the 0.5 degrees F isotherm, the chemical constituents of the plume will be approximately 2.1 percent of the difference between river ambient and the initial blowdown concentration.

Extreme Case -- February

Under the February 29-day no-flow conditions listed in Table 10.3A-1, the waste heat pattern in the Clinch River may be represented as shown in Figure 10.3A-9. The 5.44 cfs discharge exits the nozzle at approximately 15.6 fps and mixes with ambient water as it travels along a trajectory of 45 feet. The effluent is diluted by a ratio of 17.2 to 1 by the time it reaches the surface and at the point of surface impingement has been reduced to an "excess temperature" of 1.9 degrees F.

After reaching the surface, the jet will establish a mixed surface layer of approximately 5.6 feet and take the form of a two-dimensional jet. The jet spreading produces surface areas of 0.025 and 0.146 acres for the 1.5 and 1.0 degrees F isotherms, respectively.

Noteworthy in the depth extent of the plume is the bottom impingement shown in Figure 10.3A-9. Approximately 0.1 acres will be affected by waste heat at levels of 1.0 to 1.2 degrees F.

Operation of the blowdown system for 29 days under no-flow conditions would create an area upstream and downstream of the discharge point where chemical constituents of the blowdown would be prevalent. At a mixed depth between 2.6 and 5.6 feet, this would be equivalent to 2,550 acres of water that would have some detectable chemical influence. The extent of this plume is such that recirculation at the plant intake will occur in a similar fashion to that

described for the surface discharge. After 29 days, the chemical isopleths will range from 4.6 percent in the intake-discharge vicinity to 3.1 percent at the plume boundaries. Blowdown concentration is increased by 48 percent.

The mathematics employed yields a chemical plume extent of 16.2 miles both up and downstream of the discharge point. In actuality, the upstream extent cannot materialize due to the presence of Melton Hill Dam 7.1 miles above the discharge point. A precise mathematical solution to plume formation once its upstream travel has reached the dam tailrace is not possible. Most likely, the dam will alter plume development in two ways. Back pressure will eventually divert a larger percentage of the discharge jet downstream increasing plume extent in that direction. Plume progression upstream will continue at a slightly reduced rate with succeeding isopleths spreading out the plume and causing it to occupy a larger portion of the river cross-section. However, as indicated in ASSUMPTIONS, estimates of plume length are conservative predictions and development of the plumes to these full extents is highly unlikely.

Extreme Case -- July

Under the July 29-day no-flow conditions, the waste heat pattern in the Clinch River may be represented as shown in Figure 10.3A-9. The 7.24 cfs discharge exits the nozzle at approximately 20.7 feet per second and mixes with ambient water as it travels along a trajectory of 70 feet. The effluent is diluted by a ratio of 28.6 to 1 by the time it reaches the surface and at the point of surface impingement has been reduced to an "excess temperature" of 0.9 degrees F.

After reaching the surface, the jet will establish a mixed surface layer of approximately 8.8 feet as it spreads laterally and vertically.

Approximately 0.09 acres will be encompassed within the 0.5 degrees F isotherm. A steady wind blowing across the river towards the discharge could have the effect of backing up the plume causing an elevation of the surface "excess temperature" of more than 2 degrees F.

Operation of the discharge system for 29 days of a no-flow condition would create an area upstream and downstream of the discharge point where chemical constituents of the blowdown would be prevalent. At a mixed depth of 8.8 feet, this would be equivalent to 1,398 acres of water that would have some detectable chemical influence or approximately 8.8 miles of the Clinch River on either side of the discharge point. Chemical isopleths would range from 5.3 percent in the intake-discharge vicinity to 3.5 percent at the plume boundaries. Blowdown concentration would increase 50 percent. The effect of Melton Hill Dam on plume development will be similar to that described for the February extreme case.

SUBMERGED MULTIPORT DISCHARGE

Typical Case -- Winter

The submerged multiport discharge consists of four nozzles, each four inches in diameter, spaced three feet apart. Under the conditions listed in Table 10.3A-3, the winter discharge is 5.39 cfs at a temperature of 74.0 degrees F. Discharge velocity is 15.44 fps for each nozzle. The water surface will be approximately four feet above the nozzles.

The preceding conditions will produce a plume that, at the point of impingement, will have an "excess temperature" of approximately 1.55 degrees F, a plume width of 25.7 feet and a mixed depth of

approximately 3.8 feet. After surface impingement, the effluent is further dispersed by ambient turbulence. Figure 10.3A-10 shows the surface and cross-sectional isotherms as the plume is conveyed downriver. The 1.0 and 0.5 degrees F isotherms are shown to extend approximately 114 and 646 feet below the point of impingement and encompass 0.07 and 0.88 acres, respectively.

Chemical constituents of the blowdown can be detected in the thermal plume. Levels of chemical constituents present in the blowdown may be detected at the 0.5 degrees F isotherm at approximately 1.6 percent of the difference between river ambient and the initial blowdown concentrations.

Typical Case -- Summer

Discharge flow rate for the summer case is 7.20 cfs. Under this condition the multiport discharge has an exit velocity of 20.6 fps.

The plume is estimated to have an "excess temperature" of approximately 0.87 degrees F at the point of impingement, a width of 40.7 feet and a mixed depth of approximately 6.3 feet. After surface impingement, the effluent field is conveyed downstream and diluted by ambient turbulence.

An estimate of the surface and cross-sectional isotherms under the typical summer conditions is shown in Figure 10.3A-11. The 0.5 degrees F isotherm will extend approximately 26 feet downriver from the point of impingement and encompass approximately 0.30 acres.

Rapid dilution reduces the levels of waste heat and chemical constituents of the blowdown. Levels of chemical constituents present in the blowdown may be detectable at the 0.5 degrees F isotherm at approximately two percent of the difference between river ambient and the initial blowdown concentration.

Extreme Case -- February

Under the February 29 day no-flow conditions listed in Table 10.3A-1, the thermal plume may be represented as shown in Figure 10.3A-12. The 5.44 cfs discharge exits each nozzle at approximately 15.6 fps and mixes with ambient water as it travels along a trajectory of 28 feet. The effluent is diluted by a ratio of 20 to 1 by the time it reaches the surface at the point of impingement and has been reduced to an "excess temperature" of 1.6 degrees F.

After reaching the surface the jet will establish a mixed surface layer of approximately 3.5 feet. Jet spreading produces surface areas of 0.11 and 0.48 acres for the 1.0 and 0.5 degrees F isotherms, respectively. The plume will impinge the bottom affecting approximately 0.22 acres by waste heat at levels of 0.5 to 0.8 degrees F.

Operation of the discharge system for 29 days under no-flow conditions would create an area upstream and downstream of the discharge point where chemical constituents of the blowdown would be detectable. At a mixed depth of 3.5 feet, this would be equivalent to 1,850 acres of water or approximately 12.4 miles of the Clinch River on either side of the discharge point (subject to the qualifications concerning Melton Hill Dam previously mentioned). Chemical isopleths for the plume range from 2.6 percent in the intake-discharge vicinity to 1.6 percent at the outer boundaries. Blowdown concentration is increased 63 percent.

Extreme Case -- July

Under the conditions listed in Table 10.3A-1, the waste heat pattern in the Clinch River may be represented as shown in Figure 10.3A-13. The 7.24 cfs discharge exits through each of the four nozzles at approximately 20.7 fps, mixes with ambient water and travels along

a trajectory of 47 feet. The effluent is diluted by a ratio of 27.8 to 1 by the time it reaches the surface and, at the point of surface impingement, has been reduced to an "excess temperature" of 0.95 degrees F.

After reaching the surface, the jet will establish a mixed surface layer of approximately 5.9 feet. The 0.5 degree F isotherm encompasses approximately 0.44 acres.

Operation of the discharge system for 29 days under no-flow conditions would create an area upstream and downstream of the discharge point where chemical constituents of the blowdown would be detectable. At a mixed depth of 5.9 feet, this would be equivalent to 2,030 acres that would have some detectable chemical influence or approximately 12.8 miles of the Clinch River on either side of the discharge point.

Chemical isopleths range from 2.7 percent in the intake-discharge vicinity to 1.9 percent at the outer boundaries of the plume. Blowdown concentration increases 41 percent.

SUMMARY

Thermal Plumes

A description of the thermal plumes at the point of impingement with the river surface is given in Table 10.3A-6. Plumes are characterized by "excess temperature", extent and mixed layer depth. Surface acreage within the plumes is presented in Table 10.3A-7.

Chemical Plumes

Chemical constituents in the CRBRP discharges must be considered in one of two separate classes: cooling system blowdown chemicals

and non-blowdown chemicals. The blowdown contains water that has been concentrated by a 2.5 factor due to cooling system evaporation and drift losses. Also, its chemical concentration is dependent on makeup water quality and, therefore, is affected by recirculation. Non-blowdown discharges include the biocide system, sanitary waste system and liquid radwaste system effluents. These are not significantly affected by either the cooling system concentration factor or recirculation that occurs for the extreme (29 day no-flow) cases. Table 10.3A-8 gives the surface acreage and corresponding isopleths for blowdown chemical constituents. By multiplying isopleth values given elsewhere in this study by 1.5 (to account for the cooling system concentration factor), the isopleths in Table 10.3A-8 are expressed as percent concentration increases above river ambient (equivalent to the isotherms which are expressed as degrees F above river ambient). Blowdown chemical concentration increases after 29 days of no flow are given in Table 10.3A-9. Surface acreage and corresponding isopleths for the non-blowdown chemical constituents of the plant discharge are presented in Table 10.3A-10.

TABLE 10.3A-1

SELECTED FLOW REGIME CASES FOR DISCHARGE PLUME STUDY

	Typical Case		Extreme Case	
Condition	Winter	Summer	February	July
River Flow (cfs)	5,068	4,777	29 day no-flow	
Pool Level (feet MSL)	735	741	735	741
Water Temperature (°F)	43.0	66.0	42.1	64.4

TABLE 10.3A-2

FLOW CASES ANALYZED FOR DISCHARGE ALTERNATIVES

	Typical Case		Extreme Case	
Alternative	Winter	Summer	February	July
Surface Discharge			X	X
Submerged Single Port	X	X	X	X
Submerged Multiport	X	X	X	X

TABLE 10.3A-3

CRBRP BLOWDOWN CHARACTERISTICS

	Typical Case		Extreme Case	
Condition	Winter	Summer	February	July
Blowdown Temperature (°F)	74.0	90.1	74.4	90.7
Blowdown Flow (cfs)	5.39	7.20	5.44	7.24

TABLE 10.3A-4

EXIT VELOCITIES FOR ALTERNATIVE DISCHARGES
(in fps)

	Typical Case		Extreme Case	
Alternative	Winter	Summer	February	July
Surface Discharge	--	--	4.90	9.22
Submerged Single Port	15.44	20.63	15.58	20.74
Submerged Multiport*	15.44	20.63	15.58	20.74

*Velocities apply to each nozzle

TABLE 10.3A-5

CHEMICAL ISOPLETH DEVELOPMENT AS A FUNCTION OF RECIRCULATION DURING EXTREME, 29 DAY NO-FLOW, CASES

Time (days)	Isopleth (percent)	Increase In Blowdown Concentration (percent)
Surface Discharge, Extreme Case -- February		
0	0	0
2.7	5.9	0
5.4	6.2	5.9
8.0	6.6	12.1
10.7	7.0	18.8
13.4	7.4	25.8
16.1	7.9	33.2
18.8	8.3	41.1
21.4	8.8	49.4
24.1	9.3	58.2
26.8	9.9	67.5
29	10.4	76.0
Surface Discharge, Extreme Case -- July		
0	0	0
2.4	5.9	0
4.7	6.2	5.9
7.1	6.6	12.1
9.4	7.0	18.8
11.8	7.4	25.8
14.2	7.9	33.2
16.5	8.3	41.1
18.9	8.8	49.4
21.2	9.3	59.2

(Continued)

TABLE 10.3A-5 (Continued)

Time (days)	Isopleth (percent)	Increase In Blowdown Concentration (percent)
Surface Discharge, Extreme Case -- July (Continued)		
23.6	9.8	67.5
26.0	10.5	77.5
28.3	11.1	87.9
29	11.3	91.0
Submerged Single Port Discharge, Extreme Case -- February		
0	0	0
2.1	3.1	0
4.2	3.2	3.1
6.3	3.3	6.3
8.4	3.4	9.6
10.6	3.5	13.0
12.7	3.6	16.5
14.8	3.7	20.1
16.9	3.9	23.8
19.0	4.0	27.7
21.1	4.1	31.6
23.2	4.2	35.7
25.3	4.3	39.9
27.4	4.5	44.2
29	4.6	48.0

(Continued)

TABLE 10.3A-5 (Continued)

Time (days)	Isopleth (percent)	Increase In Blowdown Concentration (percent)
Submerged Single Port Discharge, Extreme Case -- July		
0	0	0
2.3	3.5	0
4.5	3.6	3.5
6.8	3.7	7.1
9.1	3.9	10.9
11.3	4.0	14.8
13.6	4.2	18.8
15.9	4.3	22.9
18.1	4.5	27.2
20.4	4.6	31.7
22.7	4.8	36.3
24.9	5.0	44.1
27.2	5.1	46.0
29	5.3	50.0
Submerged Multiport Discharge, Extreme Case -- February		
0	0	0
0.9	1.6	0
1.8	1.6	1.6
2.7	1.7	3.2
3.6	1.7	4.9
4.6	1.7	6.6
5.5	1.7	8.3
5.9	1.8	10.0

(Continued)

TABLE 10.3A-5 (Continued)

Time (days)	Isopleth (percent)	Increase In Blowdown Concentration (percent)
Submerged Multiport Discharge, Extreme Case -- February (Continued)		
7.3	1.8	11.8
8.2	1.8	13.5
9.1	1.8	15.4
10.0	1.9	17.2
10.9	1.9	19.1
11.8	1.9	21.0
12.7	2.0	22.9
13.7	2.0	24.9
14.6	2.0	26.9
15.5	2.1	28.9
16.4	2.1	31.0
17.3	2.1	33.1
18.2	2.2	35.2
19.1	2.2	37.4
20.0	2.2	39.6
20.1	2.3	41.8
21.8	2.3	44.1
22.8	2.3	46.4
23.7	2.4	48.7
24.6	2.4	51.1
25.5	2.5	53.5
26.4	2.5	56.0
27.3	2.5	58.5
28.2	2.6	61.0
29	2.6	63.0

(Continued)

TABLE 10.3A-5 (Continued)

Time (days)	Isopleth (percent)	Increase In Blowdown Concentration (percent)
Submerged Multiport Discharge, Extreme Case -- July		
0	0	0
1.5	1.9	0
3.0	1.9	1.9
4.6	2.0	3.8
6.1	2.0	5.8
7.6	2.0	7.8
9.1	2.1	9.9
10.6	2.1	12.0
12.2	2.2	14.9
13.7	2.2	16.3
15.2	2.3	18.5
16.7	2.3	20.7
18.2	2.3	23.0
19.8	2.4	25.5
21.3	2.4	27.7
22.8	2.5	30.1
24.3	2.5	32.6
25.8	2.6	35.1
27.4	2.6	37.8
28.9	2.7	40.3
29	2.7	41.0

TABLE 10.3A-6

DESCRIPTION OF THERMAL PLUMES AT POINT OF IMPINGEMENT WITH RIVER SURFACE

	Surface Discharge			Submerged Single Port			Submerged Multiport		
	Excess Temperature (°F)	Plume Width (feet)	Depth of Mixed Layer (feet)	Excess Temperature (°F)	Plume Width (feet)	Depth of Mixed Layer (feet)	Excess Temperature (°F)	Plume Width (feet)	Depth of Mixed Layer (feet)
Typical Case -- Winter	--	--	--	1.70	20.0	6.0	1.55	25.7	3.8
Typical Case -- Summer	--	--	--	0.84	30.0	8.8	0.87	40.7	6.3
Extreme Case -- February	32.3	*	*	1.90	11.8	5.6	1.60	11.8	3.5
Extreme Case -- July	2.90	14.0	4.5	0.90	23.5	8.8	0.95	23.5	5.9

*Discharge is at surface of water

TABLE 10.3A-7

SURFACE ACREAGE ENCOMPASSED BY THERMAL PLUMES

	Surface Discharge			Submerged Single Port			Submerged Multiport		
Isotherms (°F):	0.5	1.0	1.5	0.5	1.0	1.5	0.5	1.0	1.5
Typical Case -- Winter	--	--	--	0.273	0.043	< 0.001	0.880	0.070	< 0.001
Typical Case -- Summer	--	--	--	0.028	< 0.001	< 0.001	0.300	< 0.001	< 0.001
Extreme Case -- February		0.61*		NA**	0.146	0.025	0.480	0.110	< 0.001
Extreme Case -- July	0.166	0.116	0.054	0.090	< 0.001	< 0.001	0.440	< 0.001	< 0.001

*At 1.25 degrees F isotherm

**Not Applicable. Mathematical model employed cannot handle boundary effects caused by impingement of 0.5 degree F isotherm with opposite shore.

TABLE 10.3A-8

SURFACE ACREAGE ENCOMPASSED BY CHEMICAL ISOPLETHS FOR COOLING SYSTEM BLOWDOWN CHEMICAL CONSTITUENTS*

	Surface Discharge		Submerged Single Port		Submerged Multiport	
	Isopleth** (%)	Extent (acres)	Isopleth (%)	Extent (acres)	Isopleth (%)	Extent (acres)
Typical Case -- Winter	--	--	2.4	0.273	2.4	0.880
Typical Case -- Summer	--	--	3.2	0.028	3.0	0.300
Extreme Case -- February	15.6-8.9	2,032	6.9-4.7	2,500	3.9-2.4	1,850
Extreme Case -- July	17.0-8.9	1,212	8.0-5.3	1,398	4.1-2.9	2,030

*Only the chemical constituents originating in the blowdown are subject to the cooling system 2.5 concentration factor and the effects of recirculation (for the extreme cases).

**Isopleths throughout this Table are given as percentages above river ambient rather than as a percent difference between river ambient and initial blowdown concentrations.

TABLE 10.3A-9

COOLING SYSTEM BLOWDOWN CHEMICAL CONCENTRATION INCREASES DUE TO RECIRCULATION FOR EXTREME CASES

	Extreme Case -- February (percent)	Extreme Case -- July (percent)
Surface Discharge	76	91
Submerged Single Port	48	50
Submerged Multiport	63	41

TABLE 10.3A-10

SURFACE ACREAGE ENCOMPASSED BY CHEMICAL ISOPLETHS FOR NON-BLOWDOWN CHEMICAL CONSTITUENTS*

	Surface Discharge		Submerged Single Port		Submerged Multiport	
	Isopleth (%)	Extent (acres)	Isopleth (%)	Extent (acres)	Isopleth (%)	Extent (acres)
Typical Case -- Winter	--	--	1.6	0.273	1.6	0.880
Typical Case -- Summer	--	--	2.1	0.028	2.0	0.300
Extreme Case -- February	5.9	2,032	3.1	2,550	1.6	1,850
Extreme Case -- July	5.9	1,212	3.5	1,398	1.9	2,030

*CRBRP effluent streams not affected by the cooling system concentration factor or recirculation include the discharges of the biocide system, liquid radwaste system and sanitary waste treatment system.

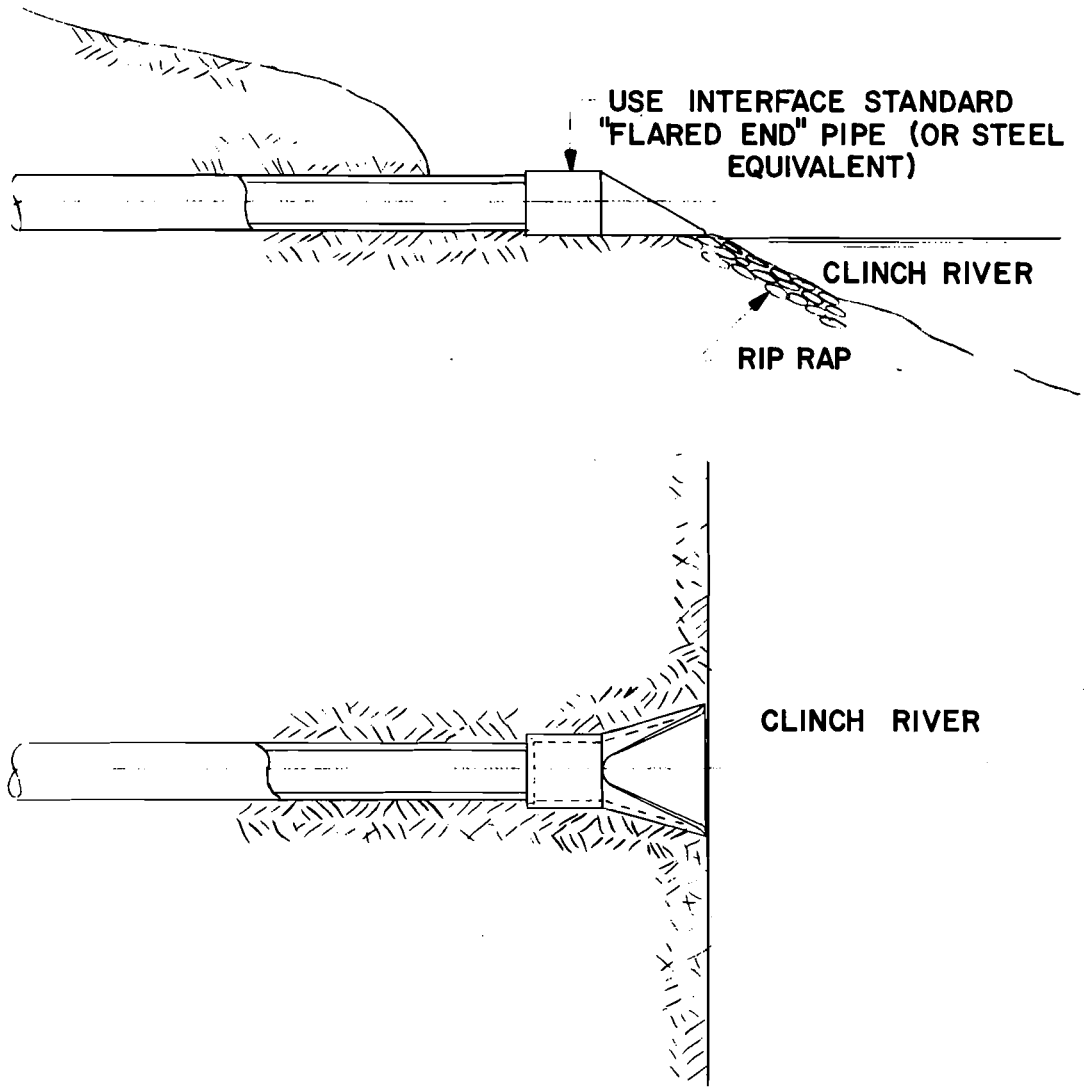

Figure 10.3A-1 SURFACE DISCHARGE DESIGN

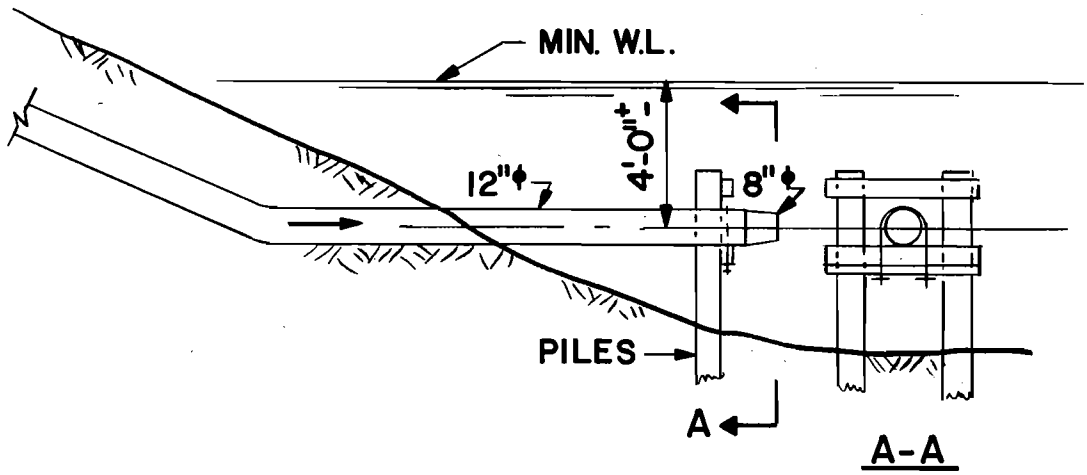

Figure 10.3A-2 SUBMERGED SINGLE PORT DISCHARGE DESIGN

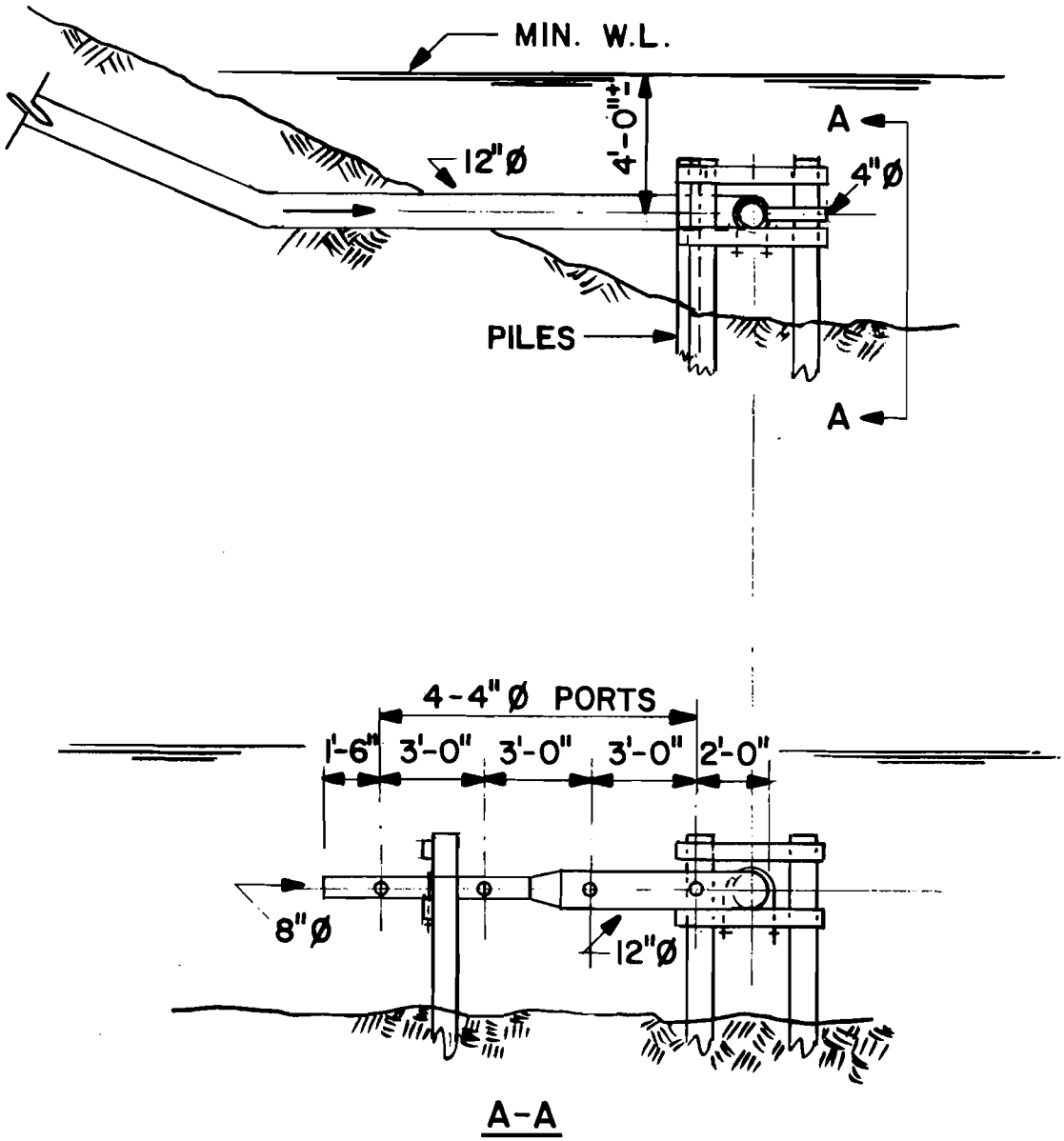

Figure 10.3A-3 SUBMERGED MULTIPORT DISCHARGE DESIGN

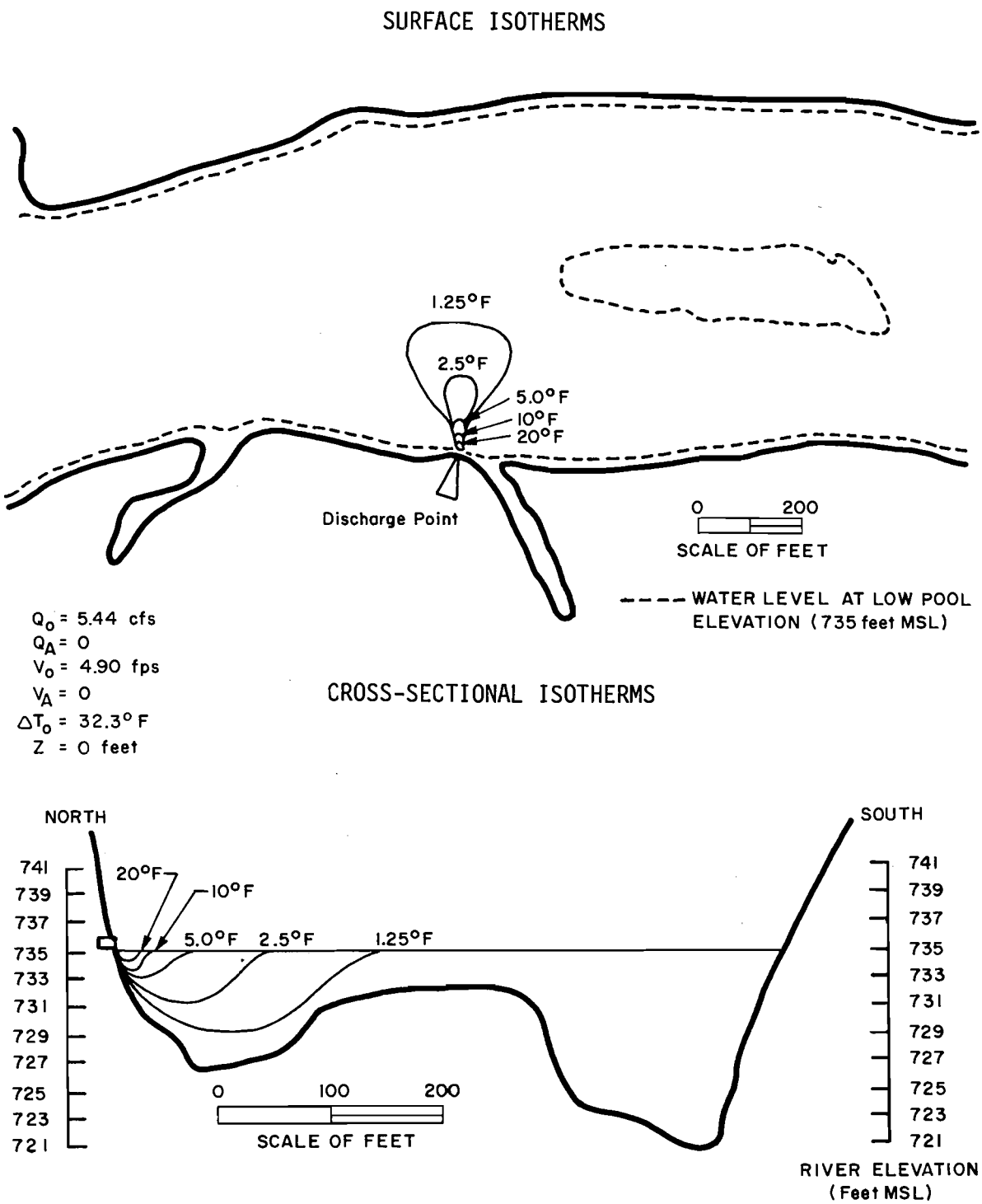

Figure 10.3A-4 SURFACE DISCHARGE, EXTREME CASE--FEBRUARY

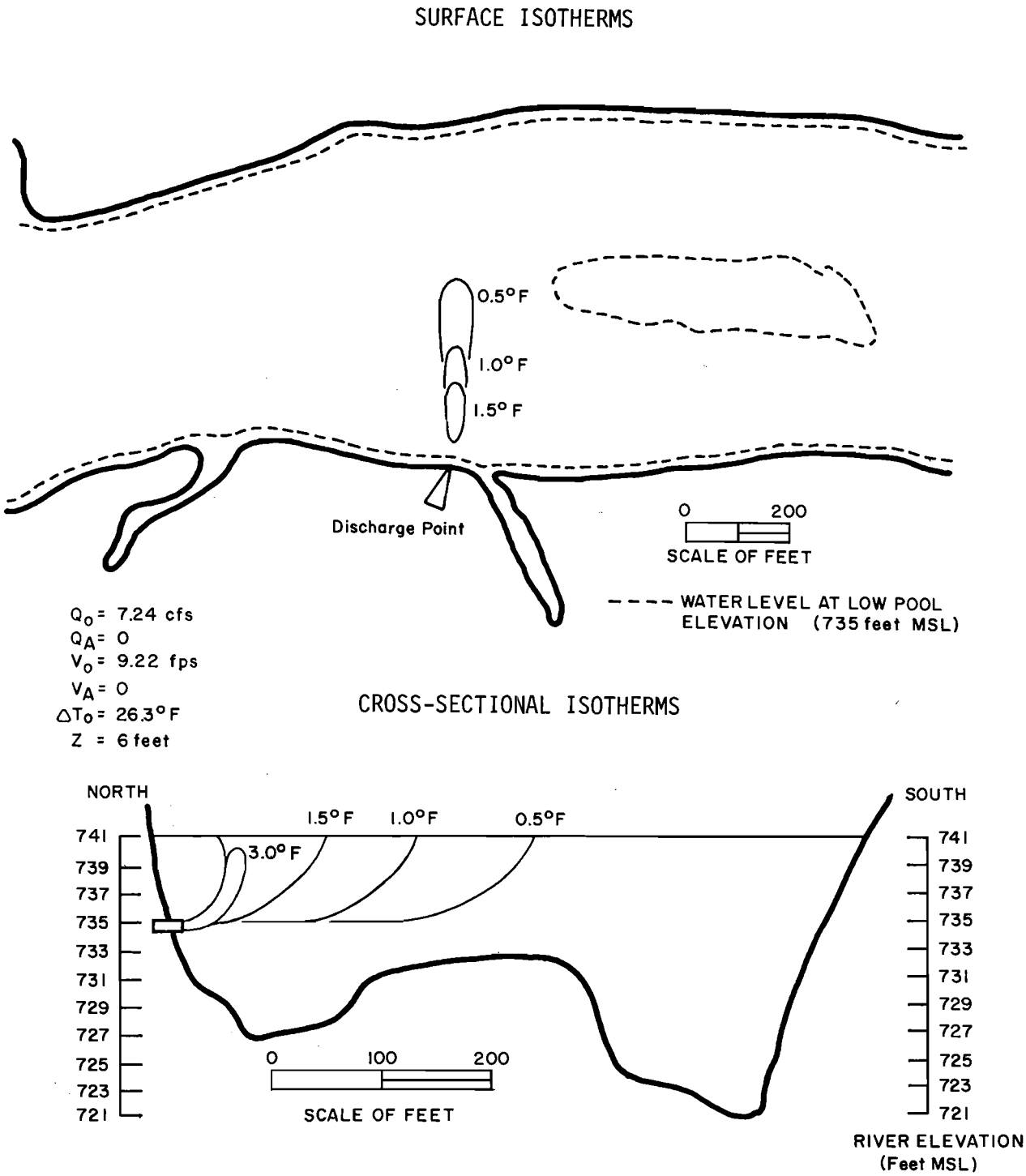

Figure 10.3A-5 SURFACE DISCHARGE, EXTREME CASE--JULY

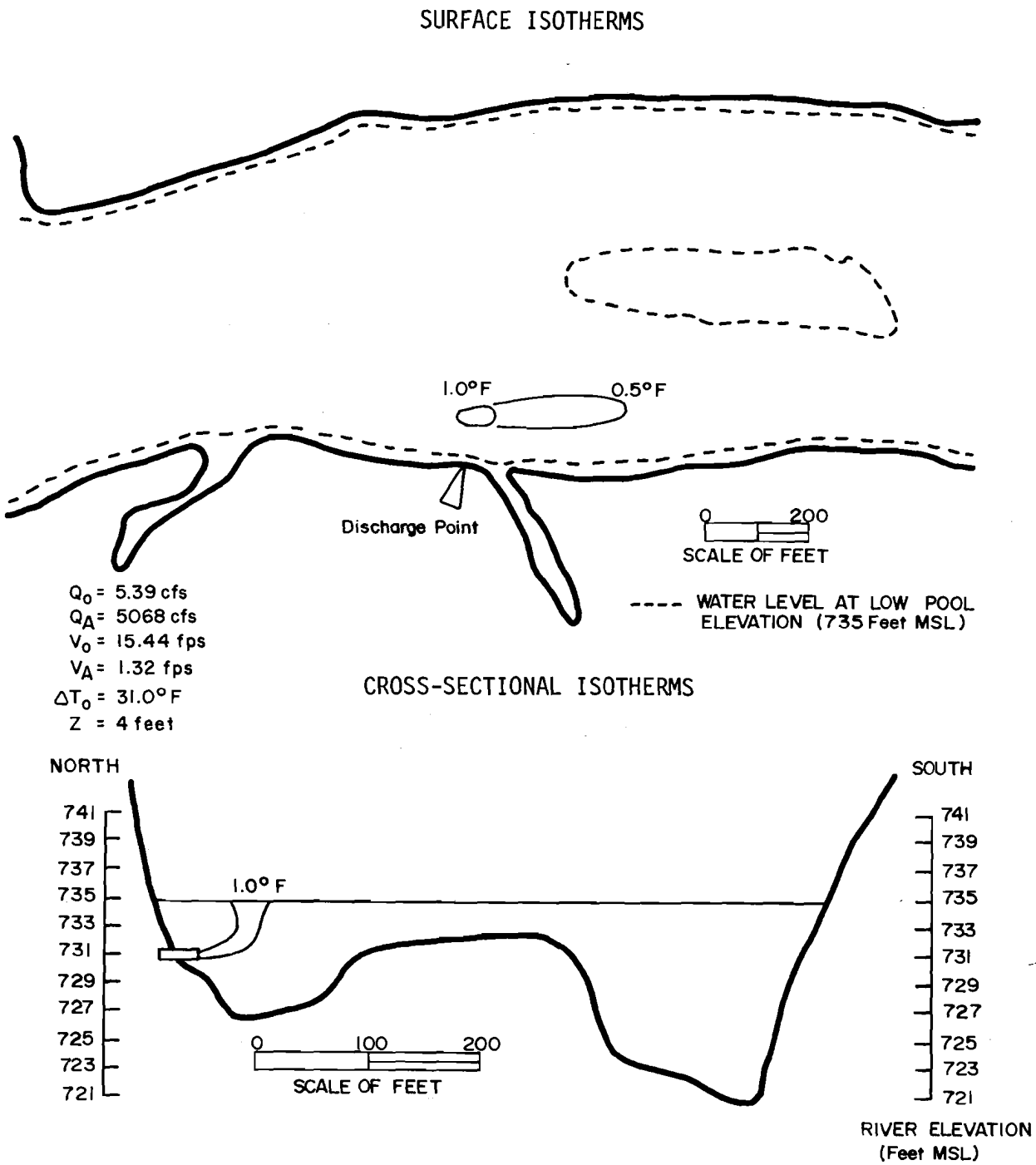

Figure 10.3A-6 SUBMERGED SINGLEPORT DISCHARGE, TYPICAL CASE--WINTER

SURFACE ISOTHERMS

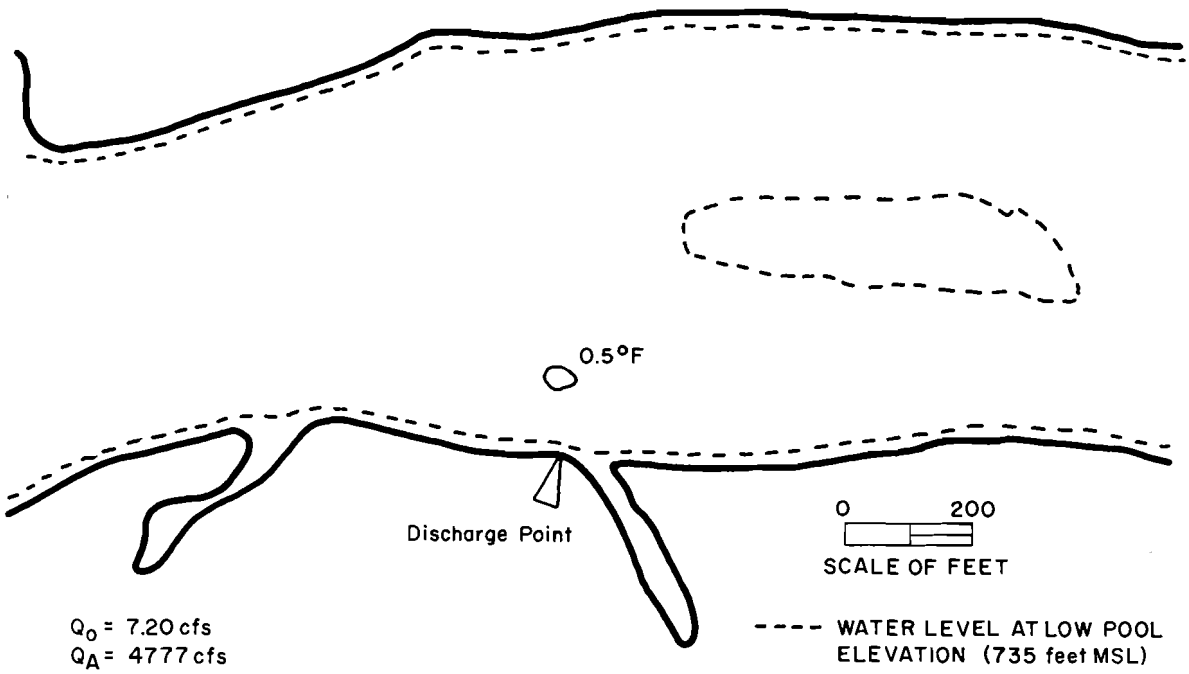

Q_O = 7.20 cfs
Q_A = 4777 cfs
V_O = 20.63 fps
V_A = 0.63 fps
ΔT_O = 24.1°F
Z = 10 feet

CROSS-SECTIONAL ISOTHERMS

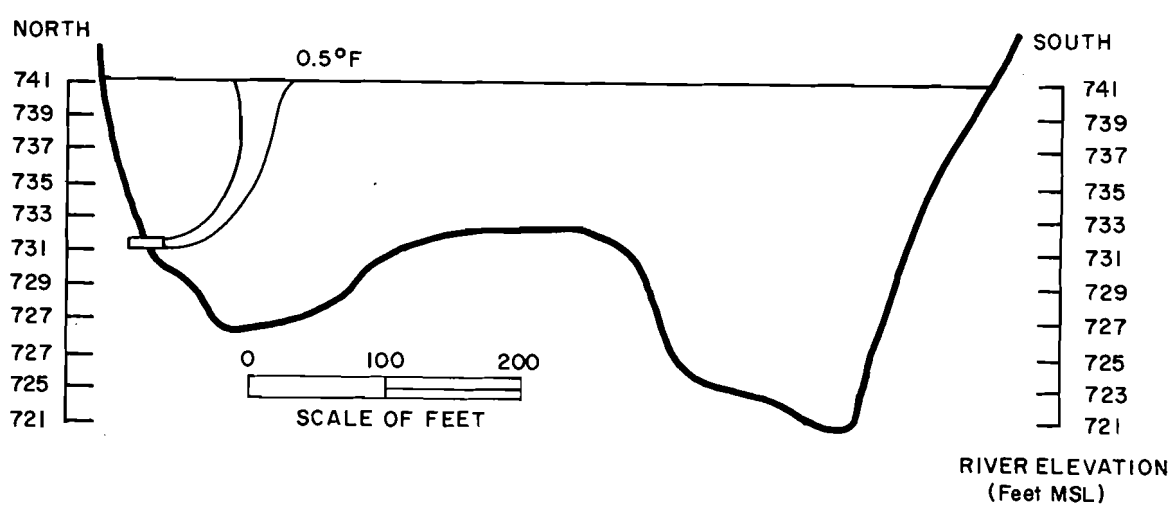

Figure 10.3A-7 SUBMERGED SINGLEPORT DISCHARGE, TYPICAL CASE--SUMMER

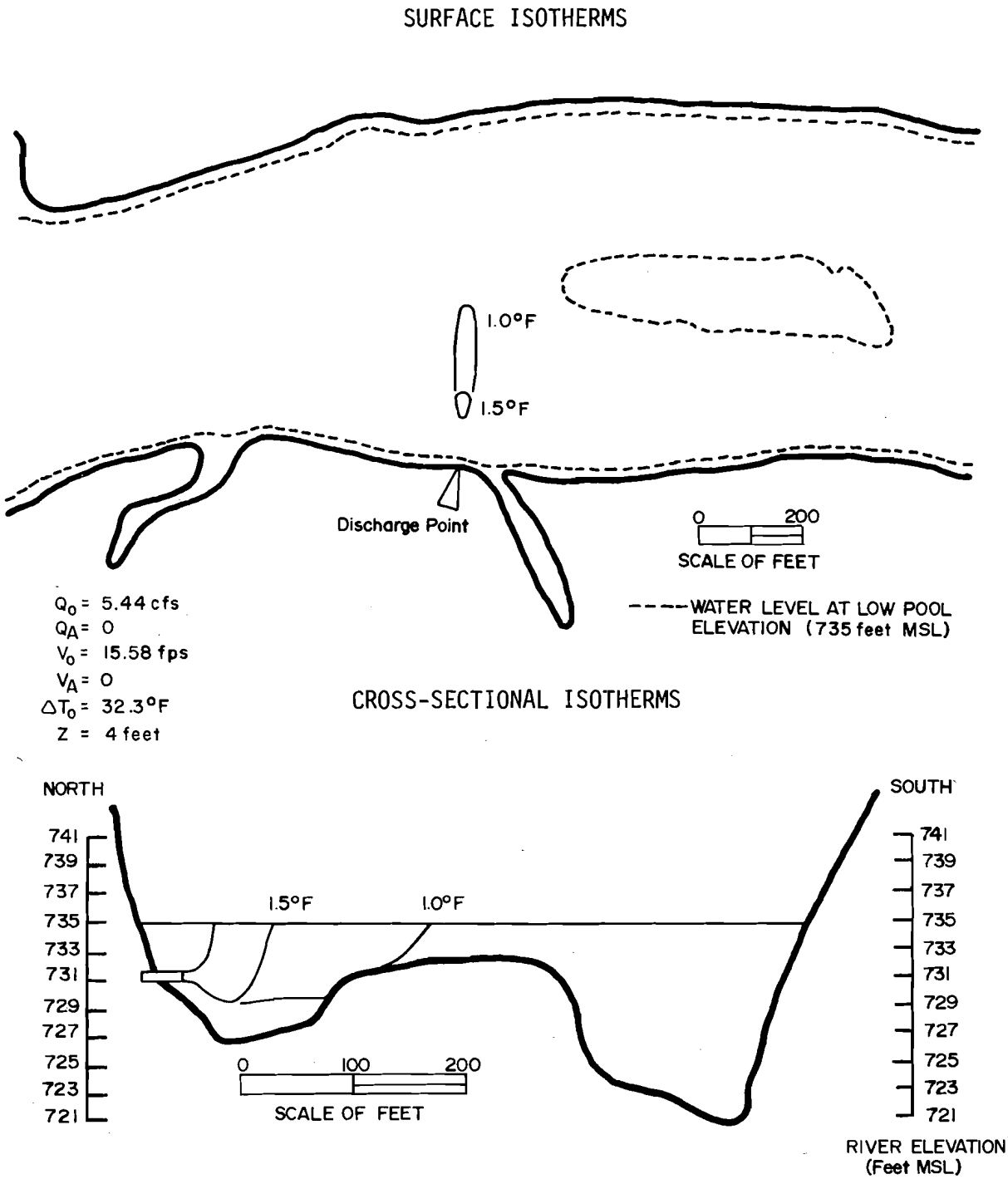

Figure 10.3A-8 SUBMERGED SINGLEPORT DISCHARGE, EXTREME CASE--FEBRUARY

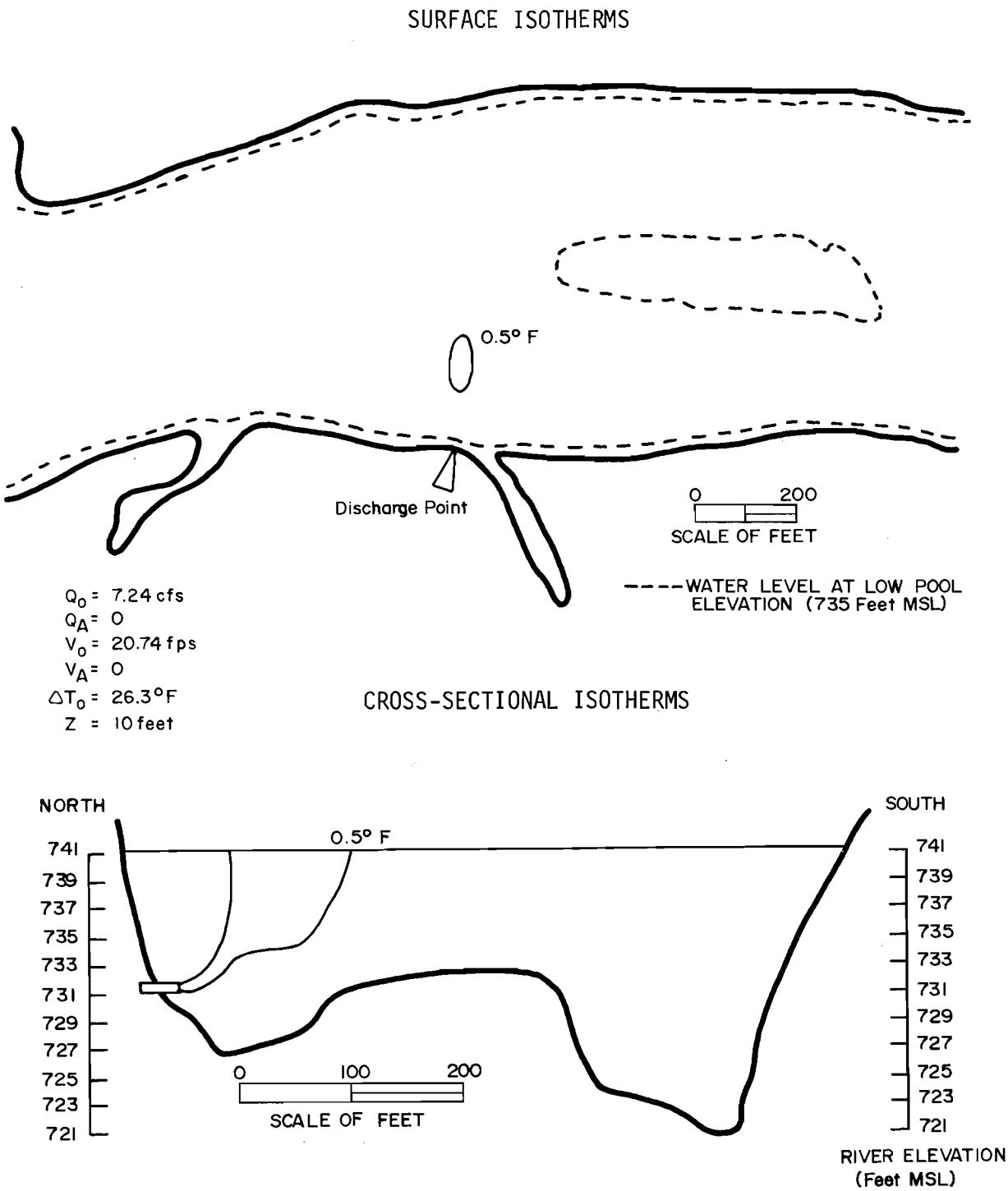

Figure 10.3A-9 SUBMERGED SINGLEPORT DISCHARGE, EXTREME CASE--JULY

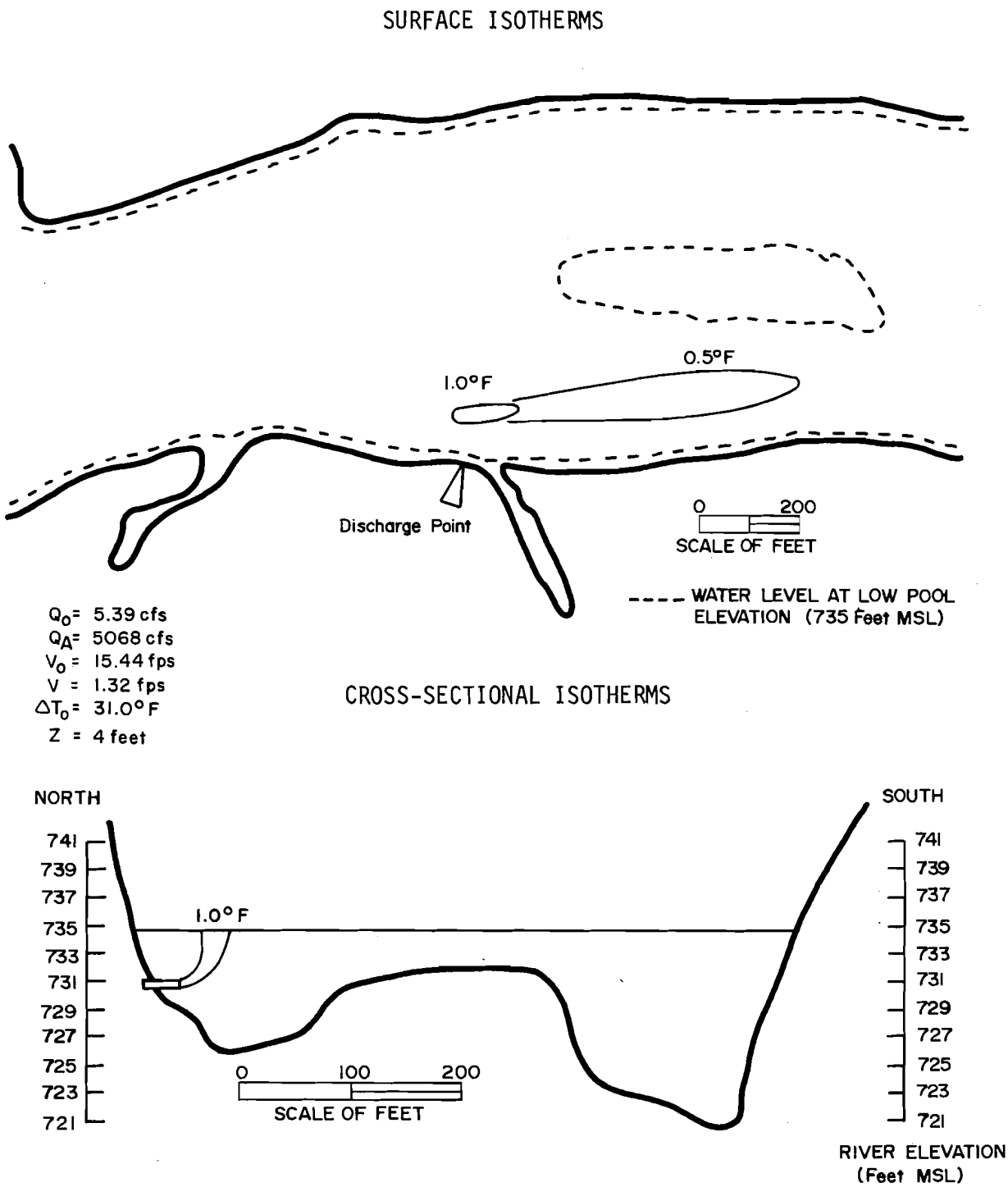

Figure 10.3A-10 SUBMERGED MULTIPORT DISCHARGE, TYPICAL CASE--WINTER

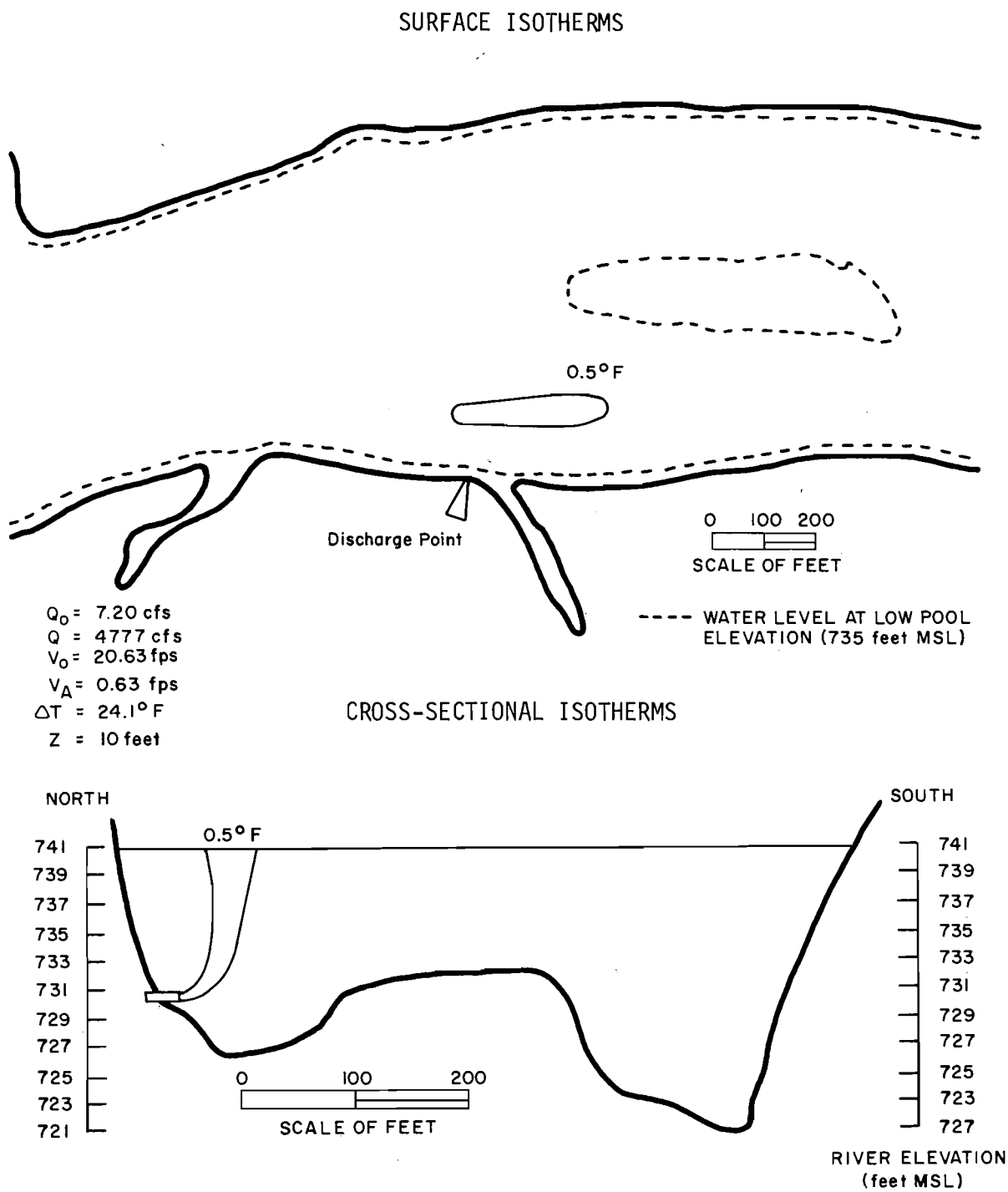

Figure 10.3A-11 SUBMERGED MULTIPORT DISCHARGE, TYPICAL CASE--SUMMER

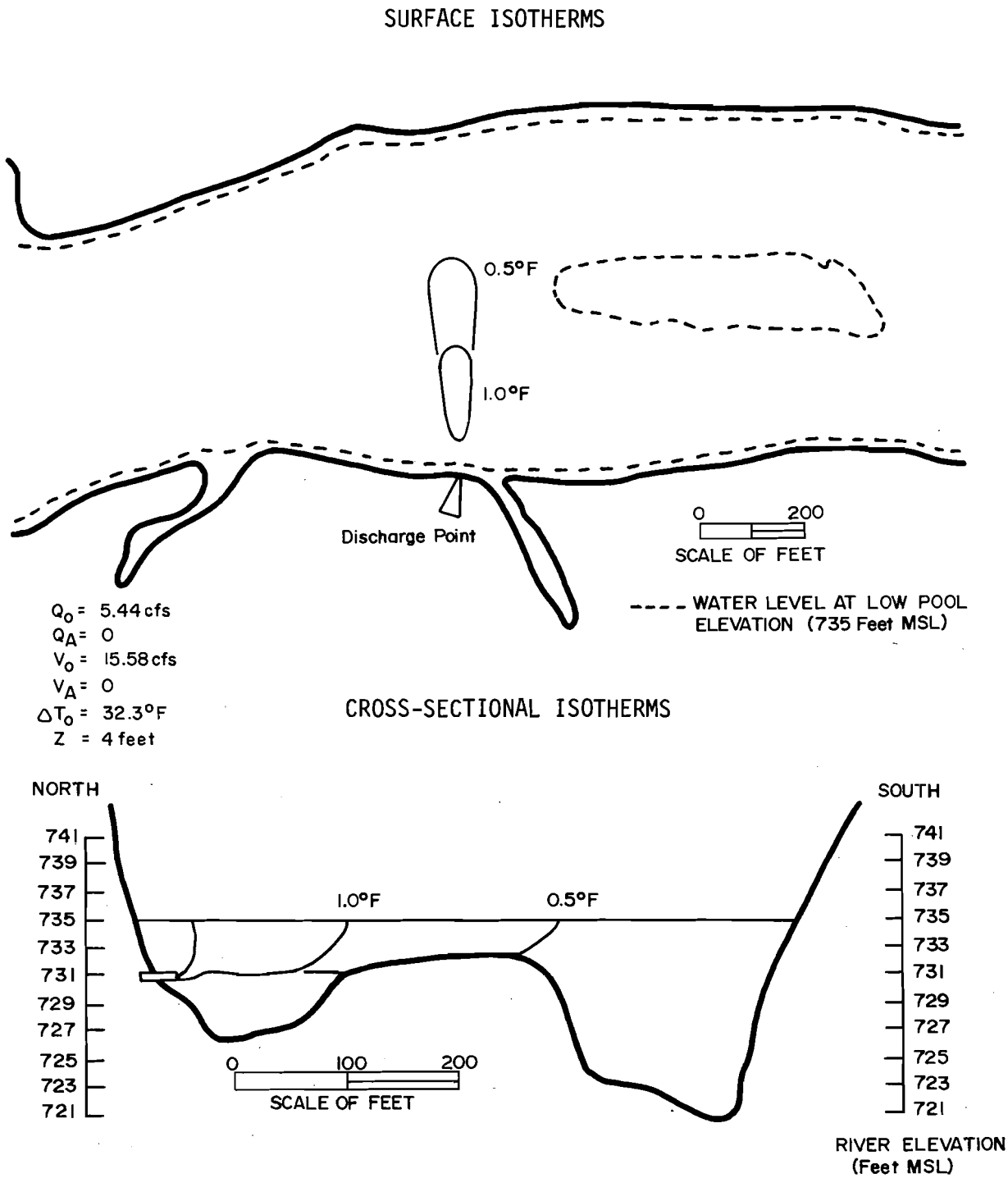

Figure 10.3A-12 SUBMERGED MULTIPORT DISCHARGE, EXTREME CASE--FEBRUARY

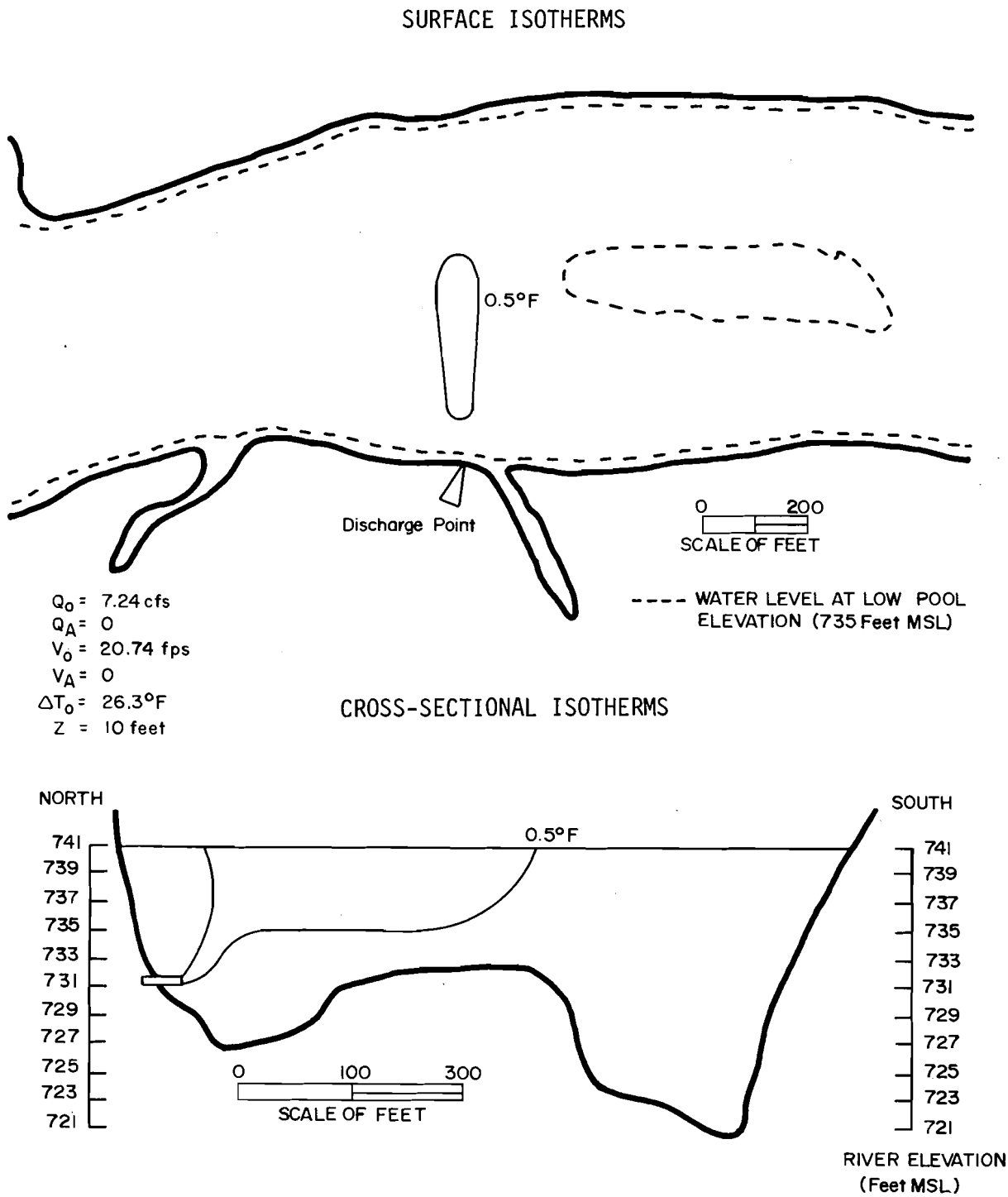

Figure 10.3A-13 SUBMERGED MULTIPORT DISCHARGE, EXTREME CASE--JULY

14.7 REFERENCES

APPENDIX REFERENCES

2.7A REFERENCES

1. Scott, W. B., and Crossman, E. J., Freshwater Fishes of Canada, Bulletin 184, Fisheries Research Board of Canada, Ottawa, 1973.

2. Carlander, K. D., Handbook of Freshwater Fishery Biology, Vol I, The Iowa State University Press, Ames, Iowa, 1969.

3. Dendy, J. S., "Food of Several Species of Fish, Norris Reservoir, Tennessee," Journal of Tennessee Academy of Science, 21 (1); 105-27, cited in Carlander, K. D., Handbook of Freshwater Fishery Biology, Vol I, The Iowa State University Press, Ames, Iowa, 1969.

4. Bell, M. C., Fisheries Handbook of Engineering Requirements and Biological Criteria, Fisheries - Engineering Research Program Corps of Engineers, North Pacific Division, Portland, Oregon, February 1973.

5. Lagler, K. F., Bardack, J. E., and Miller, R. R., Ichthyology, John Wiley & Sons, Inc., September 1963.

6. Martin, R. E., Averback, S. I., and Nelson, D. J., Growth and Movement of Smallmouth Buffalo, Ictiobus bubalus (Rafinesque), In Watts Bar Reservoir, Tennessee, Oak Ridge National Laboratory, Oak Ridge, Tennessee, January 20, 1964.

7. Harlan, J. R., and Speaker, E. B., Iowa Fish and Fishing, State Conservation Commission, Iowa, 1956.

5.2A and 5.3A REFERENCES

1. Final Environmental Statement Concerning Proposed Rule Making Action: Numerical Guides for Design Objectives and Limiting Conditions for Operation to Meet the Criterion "As Low as Practicable" for Radioactive Material in Light-Water-Cooled Nuclear Power Reactor Effluents, WASH-1258, U.S. AEC, July 1973.

2. Lederer, C. M., Hollander, J. M., and Perlman, I., Table of Isotopes, Sixth Edition, John Wiley & Sons, Inc., 1967.

3. Martin, M. J., Radioactive Atoms - Supplement 1, ORNL-4923, November 1973, 33 pages.

4. Berger, J. J., National Bureau of Standards, Beta-Ray Dose in Tissue-Equivalent Material Immersed in a Radioactive Cloud, Health Physics, Vol 26, January 1974, pp 1-12.

5. International Commission on Radiological Protection, ICRP Publication 2, Report of Committee II on Permissible Dose for Internal Radiation, Pergamon Press, 1959.

6. Tritium, Edited by Moghissi, A. A., and Carter, M. W., Messenger Graphics, Publishers, Phoenix, Arizona and Las Vegas, Nevada, Registered by TID, Oak Ridge, Tennessee as CONF-710809, May 1973, pp 405-421, 457.

7. Telecon, Van Vleck, L. D., WESD to Vollique, P., AEC, National Reactor Testing Site, Idaho Falls, Idaho, regarding Noble Gases Symposium, Las Vegas, Nevada, September 24-28, 1973.

8. Healy, J. W., Radioactive Cloud-Dose Calculations, Meteorology and Atomic Energy, 1968, p 421.

9. Owens, M. J., and Powell, A. W., Deposition Velocity of Sulfur Dioxide on Land and Water Surfaces Using 35-S Tracer Method, Atmospheric Environment, Vol 8, February 1974, pp 63-67.

10. Fletcher, J. F., and Dotson, W. L., Hermes -- A Digital Computer Code for Estimating Regional Radiological Effects from the Nuclear Power Industry, HEDL-TME-71-168, UC-80, Westinghouse Hanford Company, Richland, Washington, December 1971.

11. Witherspoon, J. P., Field Studies of Fallout Retention by Plants, Proceedings of a Symposium held at Brookhaven National Laboratory, September 15-18, 1970 on Survival of Food Crops and Livestock in the Event of Nuclear War, U.S. AEC Office of Information Sciences, December 1971.

12. Bartlett, B. O., Middleton, L. F., Milbourn, G. M., and Squire, H. M., The Removal of Fission Products from Grass by Rain, in Surveys of Radioactivity in Human Diet and Experimental Studies, British Report AR CRL-5, 1961, pp 52-54.

13. Francis, C. W., Plutonium Mobility in Soil and Uptake in Plants: A Review, Journal of Environmental Quality, Vol 2, January - March 1973, pp 67-70.

14. Environmental Analysis of the Uranium Fuel Cycle, Part II - Nuclear Power Stations, U.S. Environmental Protection Agency, Washington, D. C. 20460, November 1973.

15. Proceedings of Fifth Annual Health Physics Society Midyear Topical Symposium, Health Physics Aspects of Nuclear Facility Siting, Vol II, Idaho Falls, Idaho, November 1970.

16. National Environmental Studies Project, Study Number 6, Standard Methodology for Calculating Radiation Doses to Lower Form Biota, Atomic Industrial Forum, Inc., Washington, D. C. 20006, February 1974. (Preliminary Copy).

10.1A REFERENCES

1. Briggs, G. A., Plume Rise From Multiple Sources, Cooling Tower Environment - 1974, Symposium sponsored by the U.S. Atomic Energy Commission and the State of Maryland, March 4-6, 1974, University of Maryland.

2. George, T. T., Fog: Compendum of Meteorology edited by Malone, T. F., American Meteorological Society, Boston, 1951, pp 1179-1189.

3. Roffman, A., The Role of Environmental, Economic and Social Considerations in Selecting a Cooling System for Steam Electric Generating Plant, Symposium on Cooling Tower Environment - 1974, held at the University of Maryland, March 4-6, 1974.

4. Briggs, G. A., Plume Rise, AEC Critical Review Series, U.S. AEC Division of Technical Information Extension, Oak Ridge, Tennessee, June 1970.

5. Roffman, A., and Grimble, R. E., Predictions of Drift Deposition From Saltwater Cooling Towers, Annual Meeting of the Cooling Tower Institute, Houston, Texas, January 29-31, 1973.

6. Hanna, S. R., Rise and Condensation of Large Cooling Tower Plumes, Journal of Applied Meteorology, II(5):739, August 1972.

7. Roffman, A., and Van Vleck, L. D., The State-of-the-Art of Measuring and Predicting Cooling Tower Drift and Its Deposition, 66th Annual Meeting of the Air Pollution Control Association, Chicago, Ill., June 24-28, 1973.

10.3A REFERENCES

1. Harleman, D. R. F., Jirka, G., and Adams, E. E., A Feasibility Study of Alternate Condenser Water Discharge Schemes for the Maalaea Bay Station, Hawaii, Westinghouse Electric Corporation, August 1972.

2. Ditmars, J. D., Temperature Distributions in the Far-Field Region--Partial Mixing, Chapter 9 of Engineering Aspects of Heat Disposal From Power Generation, Massachusetts Institute of Technology Summer Session, June 28 - July 2, 1971.

3. Albertson, M. L., Dai, Y. B., Jensen, R. A., and Rouse, H., Diffusion of Submerged Jets, Trans. ASCE, 115, 1950.

4. Stolzenbach, K. D., Adams, E. E., and Harleman, D. R. F., A User's Manual for Three-Dimensional Heated Surface Discharge Computations, Ralph M. Parsons Laboratory for Water Resources and Hydrodynamics, Report No. 156, Massachusetts Institute of Technology, September 1972.

5. Shirazi, M. A., and Davis, L. R., Workbook of Thermal Plume Prediction: Volume 1, Submerged Discharge, Environmental Protection Agency EPA-R2-72-005a, August 1972.